GENERAL NOTES

1. THE DRAWINGS AND PROJECT MANUAL TOGETHER CONSTITUTE THE CONTRACT DOCUMENTS FOR CONSTRUCTION. ALL GENERAL REQUIREMENTS ARE TO BE MET AND ALL MATERIALS, FINISHES AND SYSTEMS ARE TO BE INSTALLED AND PERFORM PER SPECIFICATIONS UNLESS OTHERWISE NOTED.
2. GENERAL CONTRACTOR SHALL VISIT THE SITE, REVIEW THE BUILDING SHELL DRAWINGS AS SUBMITTED BY THE LANDLORD OR STARBUCKS AND BECOME THOROUGHLY FAMILIAR WITH THE SITE CONDITIONS PRIOR TO CONSTRUCTION.
3. GENERAL CONTRACTOR SHALL CONSULT WITH STARBUCKS CONSTRUCTION MANAGER TO RESOLVE ANY CHANGES, OMISSIONS OR PLAN DISCREPANCIES PRIOR TO CONSTRUCTION.
4. ALL WORK SHALL BE PERFORMED IN STRICT COMPLIANCE WITH LOCAL, COUNTY, STATE AND FEDERAL CODES AND ORDINANCES.
5. GENERAL CONTRACTOR SHALL VERIFY THE LOCATION OF ALL UTILITIES.
6. GENERAL CONTRACTOR TO VERIFY ALL DIMENSIONS, INCLUDING CLEARANCES REQUIRED BY OTHER TRADES AND NOTIFY STARBUCKS CONSTRUCTION MANAGER OF ANY DISCREPANCIES PRIOR TO PROCEEDING WITH THE WORK. ALL DIMENSIONS ARE TO THE FACE OF THE FINISHED SURFACE UNLESS NOTED OTHERWISE. ALL DIMENSIONS TO BE TAKEN FROM DESIGNATED DATUM POINT. DO NOT SCALE DRAWINGS.
7. GENERAL CONTRACTOR SHALL PATCH AND REPAIR ALL EXISTING WALLS, FLOORS, CEILINGS OR OTHER SURFACES IDENTIFIED TO REMAIN THAT MAY BECOME DAMAGED DURING THE COURSE OF THE WORK.
8. THE GENERAL CONTRACTOR IS RESPONSIBLE FOR OBTAINING PERMITS FOR FIRE PROTECTION, PLUMBING, MECHANICAL AND ELECTRICAL SYSTEMS PRIOR TO INSTALLATION OF SUCH SYSTEMS.
9. GENERAL CONTRACTOR SHALL RETAIN ONE SET OF PERMIT PLANS ON-SITE TO DOCUMENT ALL CHANGES MADE DURING CONSTRUCTION. THE RECORD DRAWINGS SHALL BE ISSUED TO THE OWNER AT PROJECT CLOSE-OUT AS DESCRIBED IN THE GENERAL REQUIREMENTS OF THE PROJECT MANUAL.
10. GENERAL CONTRACTOR IS RESPONSIBLE FOR COORDINATING DELIVERY OF MATERIALS FROM STARBUCKS CONTRACTED THIRD PARTY LOGISTICS DISTRIBUTION SERVICES AND VENDOR DIRECT SHIPMENTS. SEE THE PROJECT MANUAL FOR ADDITIONAL INFORMATION.
11. RESPONSIBILITY FOR SUPPLY AND DELIVERY OF MATERIALS AND EQUIPMENT IS IDENTIFIED IN THE DRAWING SCHEDULE SHEETS UNDER THE COLUMN LABELED "RESPONSIBILITY".
12. FOR THE PURPOSE OF THE DOCUMENTS, TO "INSTALL", SHALL MEAN TO PROVIDE ALL FASTENERS, MISCELLANEOUS HARDWARE, BLOCKING, ELECTRICAL CONNECTIONS, PLUMBING CONNECTIONS AND OTHER ITEMS REQUIRED FOR A COMPLETE AND OPERATIONAL INSTALLATION, UNLESS NOTED OTHERWISE.
13. ALL ITEM SUBSTITUTIONS MUST BE APPROVED BY THE STARBUCKS CONSTRUCTION MANAGER.

ARCHITECTURAL SYMBOL LEGEND

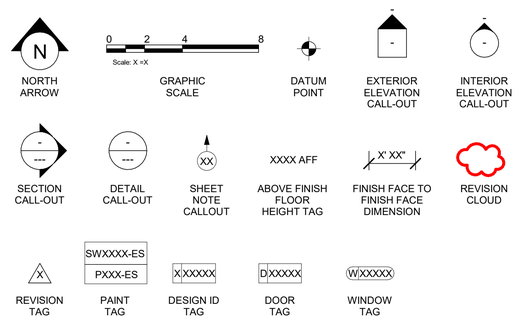

ABBREVIATIONS

A/C	AIR CONDITIONING
ACT	ACOUSTICAL CEILING TILE
ADJ	ADJUSTABLE
AFF	ABOVE FINISHED FLOOR
AMP	AMPERE
ARCH	ARCHITECT
BOH	BACK OF HOUSE
CAB	CABINET
CL	CENTER LINE
CLG	CEILING
CM	STARBUCKS CONSTRUCTION MANAGER
CTR	CENTER
CX	COMMISSIONING
CXA	COMMISSIONING AGENT
DEG	DEGREE
DET	DETAIL
DIA	DIAMETER
DIM	DIMENSION
DM	STARBUCKS DESIGN MANAGER
DN	DOWN
EA	EACH
EL	ELEVATION
EQ	EQUAL
EXIST	EXISTING
EXT	EXTERIOR
FF&E	FURNITURE, FIXTURE AND EQUIPMENT
FLR	FLOOR
FOH	FRONT OF HOUSE
FT	FOOT/FEET
G	GROUND
GC	GENERAL CONTRACTOR
HC	HOLLOW CORE
HD	HARDWARE
HM	HOLLOW METAL
HORIZ	HORIZONTAL
HR	HOUR
HT	HEIGHT
HVAC	HEATING, VENTILATING AND AIR CONDITIONING
I.D.	INSIDE DIAMETER
LEED	LEADERSHIP IN ENERGY AND ENVIRONMENTAL DESIGN
LL	LANDLORD
MAX	MAXIMUM
MEP	MECHANICAL, ELECTRICAL AND PLUMBING
MFR	MANUFACTURER
MIN	MINIMUM
NIC	NOT IN CONTRACT
NL	NIGHT LIGHT
NT	NOT TO SCALE
OC	ON CENTER
O.D.	OUTSIDE DIAMETER
PIR	PASSIVE INFRARED SENSOR
PLC	PLACE
R	RADIUS
REF	REFERENCE
REQ'D	REQUIRED
REV	REVISION
RND	ROUND
SB	STARBUCKS
SC	SOLID CORE
SF	SQUARE FEET
SHT	SHEET
SIM	SIMILAR
SPEC	SPECIFICATION
SQ	SQUARE
TEMP	TEMPORARY
TYP	TYPICAL
UNO	UNLESS NOTED OTHERWISE
VERT	VERTICAL
VIF	VERIFY IN FIELD

PROJECT CONTACTS

DESIGNER: ASHLEY SUEIRAS
95 MERRICK WAY, SUITE 650 CORAL GABLES, FL 33134
ASUEIRAS@STARBUCKS.COM

SENIOR DESIGN MANAGER: IVETTE CARDENAS
95 MERRICK WAY, SUITE 650
CORAL GABLES, FL 33134
(786) 860-4823
ICARDENA@STARBUCKS.COM

CONSTRUCTION MANAGER: CARL CRUZ
95 MERRICK WAY, SUITE 650
CORAL GABLES, FL 33134
(609) 454-7374
CACRUZ@STARBUCKS.COM

2

PROJECT MANAGER: ANDY MCLOUD
CHANGE UP INC.
2056 BYERS RD.
MIAMISBURG, OH 45342
(937) 230-6676
SOUTHEASTSBX@CHANGEUPINC.COM

ARCHITECT OF RECORD: DONALD RETHMAN
DESIGN FORUM ARCHITECTS, INC
2056 BYERS RD
MIAMISBURG, OH 45342
(937) 853-8247
DON.RETHMAN@CHANGEUPINC.COM

MEP CONSULTANT OF RECORD: TIM RABERDING
DESIGN FORUM ENGINEERING, INC
2056 BYERS RD
MIAMISBURG, OH 45342
(937) 815-1259
TIM.RABERDING@CHANGEUPINC.COM

FIXTURE CALCULATION

MIN Number of Plumbing Fixtures:

Occupant Load : 82 Indoor Occupancy
44 Outdoor Seating
82 + 44 = 126 Occupant

Distribution: Men: 63 Women: 63

2

8TH ED. 2023 FLORIDA PLUMBING CODE:

	Men	Women
Water Closets	1 Per 75 Occupants	1 Per 75 Occupants
Lavatories	1 Per 200 Occupants	1 Per 200 Occupants
Urinals	0	N/A

Fixture	Men		Women	
	REQ'D	Provided	REQ'D	Provided
Water Closets	1	1	1	1
Urinals	0	0	N/A	N/A
Lavatories	1	1	1	1
Drinking Fountains	Not Required		Not Required	

INDEX OF SHEETS

LEGEND: X - SHEET ISSUED
R - SHEET ISSUED FOR REFERENCE AND COORDINATION ONLY
SEE TITLEBLOCK FOR REVISION ISSUE DATE(S)

SHEET	SHEET TITLE	BID SET	PERMIT SET	REVISION 1	REVISION 2	REVISION 3	REVISION 4
GENERAL							
G-001	GENERAL INFORMATION	X	X				
G-002	LIFE SAFETY AND ACCESSIBILITY PLAN	X	X				
G-002.1	OCCUPANCY LOAD PLAN	X	X				
G-003	ACCESSIBILITY GUIDELINES	X	X				
G-004	FOOD SERVICE PLAN	X	X				
G-005	GREENER STORE INFORMATION	X	X				
G-006	PRE-APPROVED CONST. MATERIALS	X	X				
G-007	PRE-APPROVED CONST. MATERIALS	X	X				
ARCHITECTURAL							
A-101	BUILDING FLOOR PLAN	X	X				
A-102	BUILDING FLOOR PENETRATION PLAN	X	X				
A-104	REFLECTED CEILING PLAN	X	X				
A-105	DIMENSIONED CEILING AND LIGHTING PLAN	X	X				
A-105.1	CEILING & LIGHTING SCHEDULE	X	X				
A-501	BUILDING DETAILS	X	X				
A-502	BUILDING DETAILS	X	X				
A-503	BUILDING DETAILS	X	X				
A-504	WORKROOM DETAILS	X	X				
A-505	RESTROOM AND WORKROOM DETAILS	X	X				
A-506	CONNECTION DETAILS	X	X				
A-507	BUILDING DETAILS	X	X				
A-601	WINDOW AND DOOR SCHEDULES	X	X				
SP-001	LL SITE PLAN	X	X				
INTERIORS							
I-101	FF & E PLAN	X	X				
I-101.1	FF & E SCHEDULES	X	X				
I-101.2	FF & E SCHEDULES	X	X				
I-102	CASEWORK PLAN	X	X				
I-102.1	ADAPTABLE CASEWORK BASE PLAN	X	X				
I-102.2	ADAPTABLE CASEWORK FRAMEWORK PLAN	X	X				
I-102.3	ADAPTABLE CASEWORK CABINET PLAN	X	X				
I-102.3.1	ADAPTABLE CASEWORK CABINET SCHEDULE	X	X				
I-102.4	ADAPTABLE CASEWORK COUNTERTOP PLAN	X	X				
I-103	CASEWORK SCHEDULES	X	X				
I-106	FLOOR FINISH PLAN	X	X				
I-107	WALL FINISH PLAN	X	X				
I-201	INTERIOR FINISH ELEVATIONS	X	X				
I-202	INTERIOR FINISH ELEVATIONS	X	X				
I-203	INTERIOR FINISH ELEVATIONS	X	X				
I-204	INTERIOR FINISH ELEVATIONS	X	X				
I-205	INTERIOR FINISH ELEVATIONS	X	X				
I-206	PERSPECTIVE VIEW	X	X				
I-401	ENLARGED RESTROOM PLAN	X	X				
I-401.1	ENLARGED RESTROOM ELEVATIONS	X	X				
I-501	FLOOR FINISH DETAILS	X	X				
I-502	WALL FINISH DETAILS	X	X				
I-503	INTERIOR DETAILS	X	X				
I-504	INTERIOR DETAILS	X	X				
I-505	INTERIOR DETAILS	X	X				
I-506	INTERIOR DETAILS	X	X				
I-507	INTERIOR DETAILS	X	X				
I-508	INTERIOR DETAILS	X	X				
I-509	INTERIOR DETAILS	X	X				
I-510	INTERIOR DETAILS	X	X				
I-511	INTERIOR DETAILS	X	X				
I-512	INTERIOR DETAILS	X	X				
I-513	INTERIOR DETAILS	X	X				
I-514	INTERIOR DETAILS	X	X				
I-515	ACCOUSTICAL BAFFLES	X	X				
I-516	ACCOUSTICAL BAFFLES	X	X				
I-517	ACCOUSTICAL BAFFLES	X	X				
I-601	SCHEDULES	X	X				
I-602	SCHEDULES	X	X				
I-603	SCHEDULES	X	X				
PLUMBING							
P-001	PLUMBING NOTES	X	X				
P-111	PLUMBING SUPPLY PLAN	X	X				
P-112	PLUMBING WASTE PLAN	X	X				
P-114	PLUMBING SUPPLY ISOMETRIC	X	X				
P-115	PLUMBING WASTE ISOMETRIC	X	X				
P-501	PLUMBING DETAILS	X	X				
P-502	PLUMBING DETAILS	X	X				
P-601	PLUMBING SCHEDULES	X	X				
MECHANICAL							
M-001	MECHANICAL NOTES	X	X				
M-101	MECHANICAL DESIGN PLAN	X	X				
M-501	MECHANICAL DETAILS	X	X				
M-601	MECHANICAL SCHEDULES	X	X				
ELECTRICAL							
E-001	ELECTRICAL NOTES	X	X				
E-004	ELECTRICAL SITE PLAN	X	X				
E-005	ELECTRICAL DETAILS	X	X				
E-101	ELECTRICAL DESIGN PLAN	X	X				
E-102	LIGHTING DESIGN PLAN	X	X				
E-103	ELECTRICAL LOW VOLTAGE PLAN	X	X				
E-501	ELECTRICAL DETAILS	X	X				
E-503	ELECTRICAL DETAILS-EMS	X	X				
E-601	PANEL BOARD SCHEDULES	X	X				
EN-001	ENERGY CALCULATIONS	X	X				

SITE AND OCCUPANCY

PROJECT DESCRIPTION:	NEW TENANT IMPROVEMENT		
BUILDING HEIGHT:	1 STORY		
BUILDING AREA:	2568 SF		
BUILDING USE:	COFFEE SHOP		
ZONING:	C-4, COMMERCIAL		
TYPE OF USE:	COFFEE SHOP		
TYPE OF OCCUPANCY:	A-2, ASSEMBLY		
OCCUPANCY LOAD:	BEVERAGE PREP:	472 SF / 200	= 03
	CAFE/SEATING:	1012 SF / 15	= 68
	STANDING:	44 SF / 5	= 09
	WORKROOM:	518 SF / 300	= 02
	TOTAL OCCUPANCY:		= 82
TOTAL SQUARE FOOTAGE:	2568 SF		
TOTAL INTERIOR SEATS:	46		
EXTERIOR SEASONAL SEATING:	44		
EXTERIOR SEATING AREA:	916 SF		
EXIT CAPACITY:	EXIT 1: 72" WIDE EXIT 2: 36" WIDE EXIT 3: 42" WIDE TOTAL EXIT WIDTH PROVIDED: 150 IN. 0.2 X 82 OCCUPANTS = 16.4 IN. REQUIRED		
TRAVEL DISTANCE:	ALLOWED TRAVEL DISTANCE:	200' - 0"	
	ACTUAL TRAVEL DISTANCE:	60' - 8"	
	60' - 8" < 200' - 0" THEREFORE COMPLIES		
NUMBER OF EXITS:	MIN. NUMBER OF EXITS REQUIRED:	2	
	NUMBER OF EXITS PROVIDED:	3	

SCOPE OF WORK

INTERIOR TENANT IMPROVEMENT OF EXISTING SHELL BUILDING. SCOPE INCLUDES, BUT IS NOT LIMITED TO: PARTITIONS, EQUIPMENT, FINISHES, MECHANICAL, PLUMBING AND ELECTRICAL.

LANDLORD SHELL PERMIT NUMBER IS: BLD24-08354

2

VICINITY PLAN

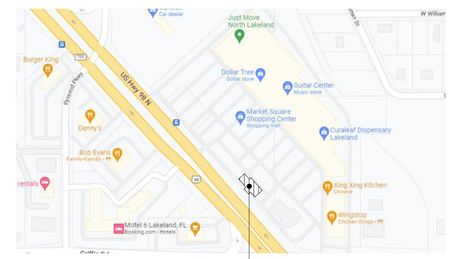

APPLICABLE CODES

8TH ED. 2023 FLORIDA BUILDING CODES

8TH EDITION 2023 FLORIDA BUILDING CODE:	EXISTING BUILDINGS
8TH EDITION 2023 FLORIDA BUILDING CODE:	PLUMBING
8FPA 70 – 2017 NATIONAL ELECTRIC CODE	
8TH EDITION 2023 FLORIDA BUILDING CODE:	ENERGY CONSERVATION
8TH EDITION 2023 FLORIDA BUILDING CODE:	MECHANICAL
8TH EDITION 2023 FLORIDA BUILDING CODE:	FUEL-GAS
8TH EDITION 2023 FLORIDA FIRE PREVENTION CODE	

2

CODE CLASSIFICATION

A.	OCCUPANCY GROUP:	A-2, ASSEMBLY
B.	CONSTRUCTION CLASSIFICATION TYPE:	II-B, NON-SPRINKLERED
C.	AUTOMATIC FIRE SUPPRESSION SYSTEM INSTALLED:	NO
D.	ZONING:	C-4, COMMERCIAL
E.	JURISDICTION/ COUNTY:	CITY OF LAKELAND

FOR CONSTRUCTION

© 2019 STARBUCKS COFFEE COMPANY

STARBUCKS®
2401 UTAH AVENUE SOUTH
SEATTLE, WASHINGTON 98134
(206) 318-1575

THESE DRAWINGS AND THE PROJECT MANUAL ARE CONFIDENTIAL AND SHALL REMAIN THE SOLE PROPERTY OF STARBUCKS CORPORATION, WHICH IS THE OWNER OF THE COPYRIGHT IN THIS WORK. THEY SHALL NOT BE REPRODUCED (IN WHOLE OR IN PART), SHARED WITH THIRD PARTIES OR USED IN ANY MANNER ON OTHER PROJECTS OR EXTENSIONS TO THIS PROJECT WITHOUT THE PRIOR WRITTEN CONSENT OF STARBUCKS CORPORATION. THESE DRAWINGS AND SPECIFICATIONS ARE INTENDED TO EXPRESS DESIGN INTENT FOR A PROTOTYPICAL STARBUCKS STORE (WHICH IS SUBJECT TO CHANGE AT ANYTIME) AND DO NOT REFLECT ACTUAL SITE CONDITIONS. NEITHER PARTY SHALL HAVE ANY OBLIGATION NOR LIABILITY TO THE OTHER (EXCEPT STATED ABOVE) UNTIL A WRITTEN AGREEMENT IS FULLY EXECUTED BY BOTH PARTIES.

STARBUCKS TEMPLATE VERSION: i2021-09-13

Design Forum Architects Inc.
2056 Byers Rd
Miamisburg, OH 45342
Tel: (844) 804-7700
Donald J. Rethman
Architect In Charge
License: AR0017303

Design Forum Engineering
2056 Byers Rd
Miamisburg, OH 45342
Tel: (844) 804-7700
Timothy L. Raberding, PE
Professional Engineer
License: 62078

PROJECT NAME:
US 98 & GRIFFIN RD

PROJECT ADDRESS:
3105 US-98 NORTH
LAKELAND, FLORIDA 33801

STORE #:	80004
PROJECT #:	96892-001
ISSUE DATE:	2025-10-10
DESIGNER:	ASHLEY SUEIRAS
PRODUCTION DESIGNER:	ANDY MCLOUD
CHECKED BY:	DONALD RETHMAN

2

Revision Schedule

Rev	Date	By	Description
2	08/26/25		REV-2

SHEET TITLE:
GENERAL INFORMATION

SCALE: NO SCALE

SHEET NUMBER:
G-001

10/9/2025 9:53:06 AM C:\Users\julia.gray\Documents\96892-001_80004_US 98 & Griffin Rd, FL_2025_Julia.gray\FRYY6.rvt

INDOOR SEATING CALCULATIONS

DESCRIPTION	NUMBER OF ITEMS	SEATS	PER ITEM
TABLE TOP ROUND	06	17 SEATS	03
TABLE TOP OBLONG	02	04 SEATS	02
COMMUNITY TABLE, ADA	01	06 SEATS	01
SOFT SEATING	11	15 SEATS	02
SIT-HERE COUNTER	01	04 SEATS	04
		46 SEATS X 5% = 03 ADA REQUIRED	**03 PROVIDED**
		TOTAL	**46 SEATS**

OUTDOOR SEATING CALCULATIONS

DESCRIPTION	NUMBER OF ITEMS	SEATS	PER ITEM
TABLE TOP SQUARE	02	04 SEATS	02
TABLE TOP ROUND	04	13 SEATS	03
TABLE TOP RECTANGLE, ADA	02	04 SEATS	02
COMMUNITY TABLE, ADA	01	08 SEATS	08
SOFT SEATING	06	15 SEATS	02
		44 SEATS X 5% = 03 ADA REQUIRED	**3 PROVIDED**
		TOTAL	**44 SEATS**

EGRESS CALCULATION

EXIT WIDTH REQUIRED - 82 OCC X 0.2	= 16.4 IN.
EXIT WIDTH PROVIDED	= 150 IN.
EXITS	= 72 IN. PRIMARY ENTRY, 36 IN. SECONDARY ENTRY, 42 IN. WORKROOM ENTRY
EXITS REQUIRED	= 02
EXITS PROVIDED	= 03
MAXIMUM ALLOWABLE TRAVEL DISTANCE	= 200 FT.
MAXIMUM TRAVEL DISTANCE PROVIDED	= 60 FT. 8 IN.
MINIMUM EXIT SEPARATION	= 59 FT. 6 IN. (MAXIMUM DIAGONAL) / 2 = 29 FT. 9 IN.
EXIT SEPARATION PROVIDED	= 47 FT. 2 IN.

OCCUPANCY

BEVERAGE PREP: 472 SQ. FT. / 200 SQ. FT. / OCC	03 OCC
CAFE/ SEATING: 1012 SQ. FT. / 15 SQ. FT. / OCC	68 OCC
STANDING AREA: 45 SQ. FT. / 05 SQ. FT. / OCC	09 OCC
WORKROOM: 518 SQ. FT. / 300 SQ. FT. / OCC	02 OCC
TOTAL INTERIOR OCCUPANCY:	**82 OCC**
TOTAL EXTERIOR OCCUPANCY:	**44 OCC**
TOTAL OCCUPANCY LOAD:	**126 OCC**

PLUMBING FIXTURE CALCULATION

CHAPTER 29-29023 (FOR REFERNCE ONLY)

OCCUPANCY	MALE	FEMALE	TOTAL
	63 OCC	63 OCC	**126 OCC**

FIXTURES		WATERCLOSETS		URINALS	LAVATORIES		WATER FOUNTAIN
		ADD EQUATION PER AHJ		ADD EQUATION PER AHJ	ADD EQUATION PER AHJ		ADD EQUATION PER AHJ
	REQUIRED:	01 WC PER 75 M	01 WC PER 75 F	00 U PER M	01 LAV PER 200 M	01 LAV PER 200 F	NOT REQUIRED
	PROVIDED:	01 WC PER 63 M	01 WC PER 63 F	00 U PER M	01 LAV PER 63 M	01 LAV PER 63 F	NOT REQUIRED

MEANS OF EGRESS NOTES

A. EVERY ROOM OR SPACE THAT IS ASSEMBLY OCCUPANCY SHALL HAVE THE OCCUPANT LOAD OF THE ROOM OR SPACE POSTED IN A CONSPICUOUS PLACE, NEAR THE MAIN EXIT ACCESS DOORWAY. POSTED SIGNS SHALL BE OF AN APPROVED LEGIBLE PERMANENT DESIGN AND SHALL BE MAINTAINED BY THE OWNER AUTHORIZED AGENT. (1004.3)

B. EGRESS SHALL NOT PASS THROUGH KITCHENS, STORAGE ROOMS, CLOSETS OR SIMILAR SPACES. (1014.2)

C. PANIC AND FIRE EXIT HARDWARE, WHERE INSTALLED ON DOORS IN THIS BUILDING SHALL SATISFY THE FOLLOWING (1008.1.10):

1. THE ACTUATION PORTION OF THE RELEASING DEVICE SHALL EXTEND AT LEAST ONE-HALF OF THE DOOR LEAF WIDTH.
2. THE MAXIMUM UNLATCHING FORCE DOES NOT EXCEED 15 POUNDS (6.8 KG).
3. PIVOTED OR BALANCED DOORS SHALL BE OF THE PUSH-PAD TYPE WHERE PANIC HARDWARE IS REQUIRED AND THE PAD SHALL NOT EXTEND ACROSS MORE THAN ONE-HALF OF THE DOOR WIDTH, MEASURED FROM THE LATCH SIDE.
4. PANIC HARDWARE LISTED IN ACCORDANCE WITH UL 305.
5. FIRE EXIT HARDWARE LISTED IN ACCORDANCE WITH UL 10C AND UL 305.

D. STRUCTURAL ELEMENTS, FIXTURES OR FURNISHINGS SHALL NOT PROJECT HORIZONTALLY FROM EITHER SIDE MORE THAN 4 INCHES (100 MM) OVER ANY WALKING SURFACE BETWEEN 27 INCHES (685 MM) AND 80 INCHES (2030 MM) ABOVE THE WALKING SURFACE. EXCEPTION: HANDRAILS SERVING STAIRS AND RAMPS ARE PERMITTED TO PROTRUDE 4 1/2 INCHES (115 MM) FROM THE WALL. (1003.3.3) ES (11120 MM). (1008.1.5, 1008.1.6)

E. THE PATH OF EGRESS TRAVEL EXITS AND WITHIN EXITS IN THIS BUILDING SHALL BE IDENTIFIED BY EXIT SIGNS CONFORMING TO THE REQUIREMENTS OF SECTION 1011 AND AS NOTED BELOW:

1. EXIT SIGNS SHALL BE READILY VISIBLE FROM ANY DIRECTION OF EGRESS TRAVEL.
2. EXIT SIGNS SHALL BE LOCATED AS NECESSARY TO CLEARLY INDICATE THE DIRECTION OF EGRESS TRAVEL.
3. NO POINT IN A CORRIDOR SHALL BE MORE THAN 100 FT (30.5 M) OR THE LISTED VIEWING DISTANCE FOR THE SIGN, WHICHEVER IS LESS, FROM THE NEAREST VISIBLE EXIT SIGN.

F. WHERE KEY OPERATED LOCKING DEVICES ARE USED, POST A SIGN ON OR ADJACENT TO THE REQUIRED MAIN EXIT DOOR WITH 1 INCH (25 MM) LETTERING STATING THAT "THIS DOOR TO REMAIN UNLOCKED WHEN BUILDING IS OCCUPIED". (1008.1.9.3)

G. EGRESS DOORS OR GATES SHALL BE OPENABLE FROM THE EGRESS SIDE WITHOUT THE USE OF A KEY, SPECIAL KNOWLEDGE OR EFFORT. DOOR HANDLES, PULLS, LATCHES, LOCKS AND OTHER OPERATING DEVICES SHALL BE INSTALLED 34 INCHES (860 MM) TO 48 INCHES (1220 MM) ABOVE FINISHED FLOOR. MANUALLY OPERATED FLUSH BOLTS OR SURFACE BOLTS ARE NOT PERMITTED. THE UNLATCHING OF ANY DOOR OR LEAF SHALL NOT REQUIRE MORE THAN ONE OPERATION. (1008.1.9)

H. LANDINGS SHALL BE PROVIDED ON EACH SIDE OF DOORS AND SUCH LANDING SHALL BE AT THE SAME ELEVATION ON EACH SIDE OF THE DOOR. LANDINGS SHALL HAVE A WIDTH NOT LESS THAN THE WIDTH OF THE DOOR AND LENGTH MEASURED IN THE DIRECTION OF TRAVEL OF NOT LESS THAN 44 INCHES (11120 MM). (1008.1.5, 1008.1.6)

KEYED NOTES

1. THRESHOLDS TO BE BARRIER FREE COMPLIANT PER ALL APPLICABLE CODES.
2. BARRIER-FREE PATH OF TRAVEL.
3. 30" (760 MM) X 52" (1320 MM) CLEAR FOR WHEELCHAIR ACCESS.
4. 60" (1525 MM) DIAMETER MINIMUM TURN RADIUS FOR WHEELCHAIR ACCESS.
5. 32" (813 MM) MINIMUM CLEAR AT RESTROOM DOOR.
6. SEE ENLARGED RESTROOM PLAN AND ELEVATIONS SHEET(S) FOR ADDITIONAL INFORMATION ON ACCESSIBLE RESTROOM CLEARANCES.
7. POS TRANSACTION PLANE, WASTE AND RECYCLE STATION AND HAND-OFF PLANE ARE 34 INCHES (860 MM) ABOVE THE FINISHED FLOOR FOR WHEELCHAIR ACCESSIBILITY.
8. PROVIDE BARRIER-FREE SIGNAGE AT ADA RESTROOMS PER ALL APPLICABLE CODES.
9. PROVIDE TACTILE "EXIT" SIGNAGE.
10. PROVIDE INTERNATIONAL SYMBOL OF ACCESSIBILITY SIGN.
11. LOCATION OF EMERGENCY EXIT LIGHT/EMERGENCY LIGHT PER FIRE INSPECTION REQUIREMENTS.
12. LOCATION OF EXISTING ELECTRICAL PANELS.
13. LOCATION OF FIRE EXTINGUISHER PER FIRE INSPECTION REQUIREMENTS.
14. EXISTING EXTERIOR EXIT DISCHARGE LIGHT.
15. PATIO RAILING.
16. BIKE RACK.

ROOM SCHEDULE

NAME	AREA (SF)
BEVERAGE PREP	472
CAFE/SEATING	1012
RESTROOMS/UNOCCUPIABLE AREA	521
STANDING AREA	45
WORKROOM	518
GRAND TOTAL	2568

OCCUPANCY NOTES

OCCUPANCY CLASSIFICATION: A-2, ASSEMBLY

TOTAL OCCUPANTS: 82

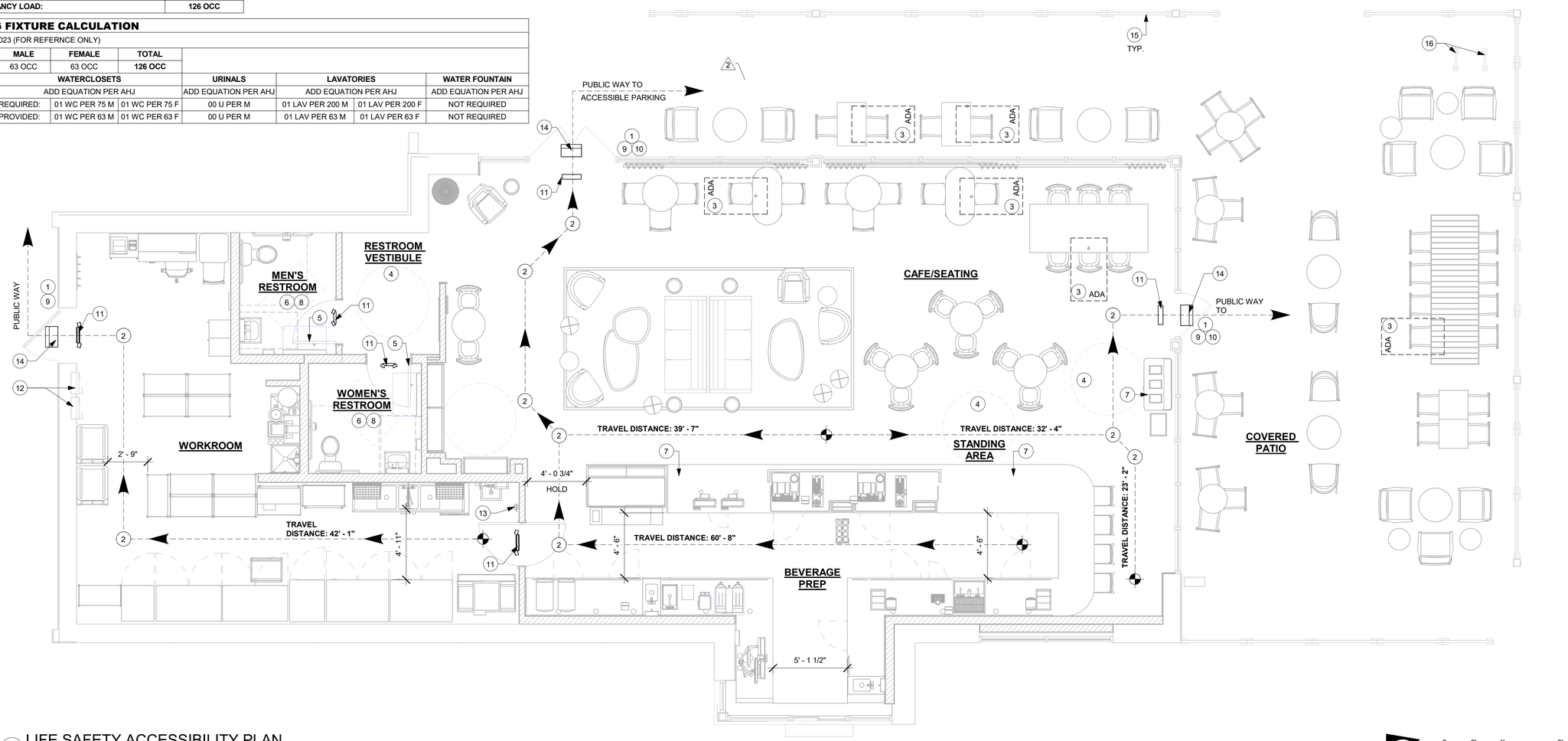

1 LIFE SAFETY ACCESSIBILITY PLAN
Scale: 1/4" = 1'-0"

N

0 2' 4' 8'
Scale: 1/4" = 1'-0"

FOR CONSTRUCTION

© 2019 STARBUCKS COFFEE COMPANY

STARBUCKS®
2401 UTAH AVENUE SOUTH
SEATTLE, WASHINGTON 98134
(206) 318-1575

THESE DRAWINGS AND THE PROJECT MANUAL ARE CONFIDENTIAL AND SHALL REMAIN THE SOLE PROPERTY OF STARBUCKS CORPORATION, WHICH IS THE OWNER OF THE COPYRIGHT IN THIS WORK. THEY SHALL NOT BE REPRODUCED (IN WHOLE OR IN PART), SHARED WITH THIRD PARTIES OR USED IN ANY MANNER ON OTHER PROJECTS OR EXTENSIONS TO THIS PROJECT WITHOUT THE PRIOR WRITTEN CONSENT OF STARBUCKS CORPORATION. THESE DRAWINGS AND SPECIFICATIONS ARE INTENDED TO EXPRESS DESIGN INTENT FOR A PROTOTYPICAL STARBUCKS STORE (WHICH IS SUBJECT TO CHANGE AT ANYTIME) AND DO NOT REFLECT ACTUAL SITE CONDITIONS. NEITHER PARTY SHALL HAVE ANY OBLIGATION NOR LIABILITY TO THE OTHER (EXCEPT STATED ABOVE) UNTIL A WRITTEN AGREEMENT IS FULLY EXECUTED BY BOTH PARTIES.

STARBUCKS TEMPLATE VERSION: i2021-09-13

Design Forum Architects Inc.
2056 Byers Rd
Miamisburg, OH 45342
Tel: (844) 804-7700
Donald J. Rethman
Architect In Charge
License: AR0017303

Design Forum Engineering
2056 Byers Rd
Miamisburg, OH 45342
Tel: (844) 804-7700
Timothy L. Raberding, PE
Professional Engineer
License: 62078

PROJECT NAME:
US 98 & GRIFFIN RD

PROJECT ADDRESS:
3105 US-98 NORTH
LAKELAND, FLORIDA 33801

STORE #:	80004
PROJECT #:	96892-001
ISSUE DATE:	2025-10-10
DESIGNER:	ASHLEY SUEIRAS
PRODUCTION DESIGNER:	ANDY MCLOUD
CHECKED BY:	DONALD RETHMAN

Revision Schedule

Rev	Date	By	Description
1	08/26/25		REV-1
2	08/26/25		REV-2

SHEET TITLE:
LIFE SAFETY AND ACCESSIBILITY PLAN
SCALE: 1/4" = 1'-0"

SHEET NUMBER:
G-002

10/9/2025 9:53:11 AM C:\Users\julia.gray\Documents\96892-001_80004_US 98 & Griffin Rd, FL_2025_Julia.gray\FRYY6.rvt

AREA COLOR LEGEND

- BOOTH SEATING
- STANDING AREA
- CAFE/SEATING
- BEVERAGE PREP.
- WORKROOM
- EGRESS / UNOCCUPIABLE

AREA - OCCUPANT LOAD CALCS

NAME	AREA (SF)	LOAD FACTOR	OCCUPANT LOAD
BEVERAGE PREP	472	200	3
CAFE/SEATING	1012	15	68
EGRESS - UNOCCUPIABLE	521	0	0
STANDING AREA	45	5	9
WORKROOM	518	300	2
GRAND TOTAL	2568		82

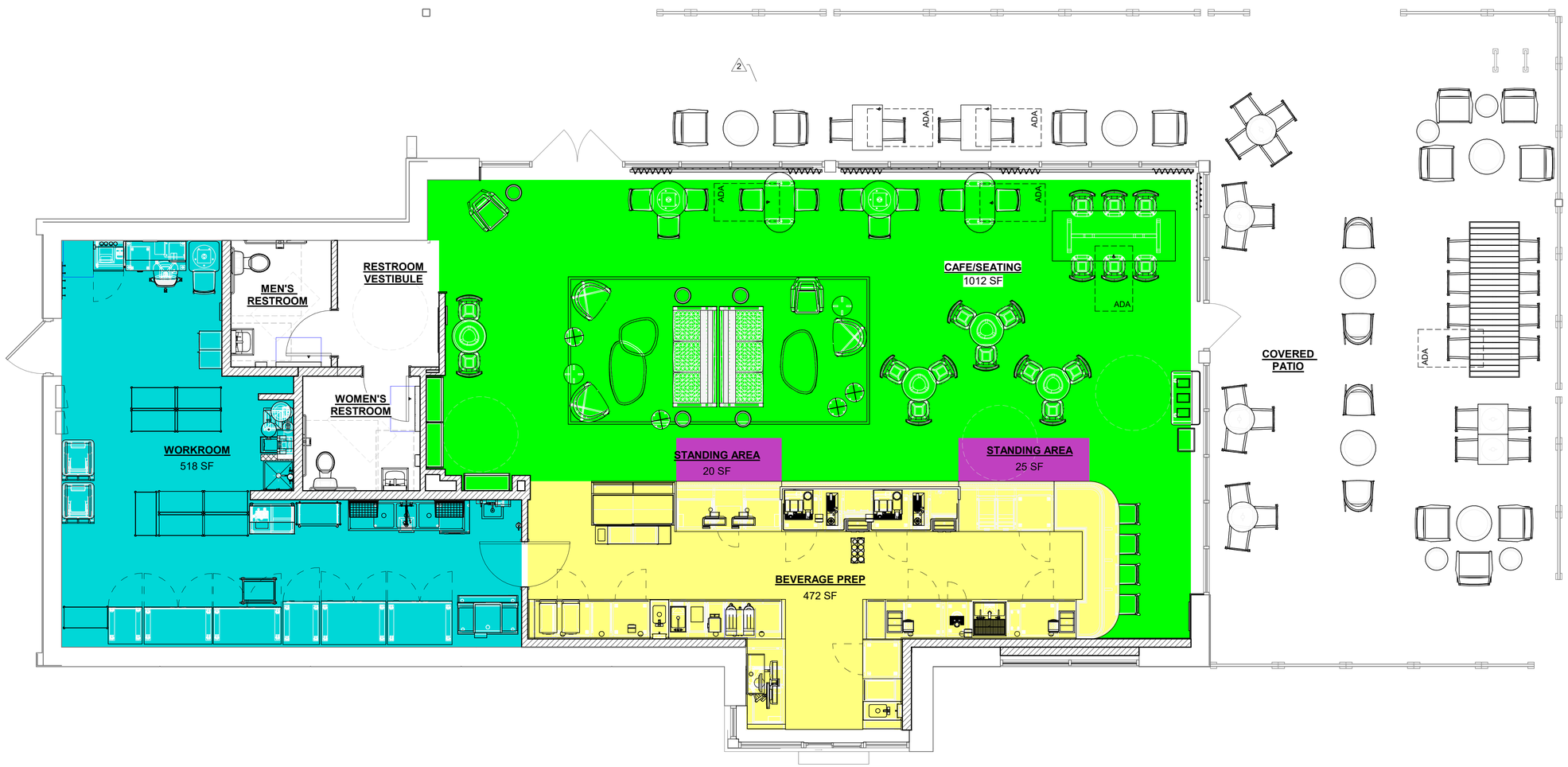

1 OCCUPANCY LOAD PLAN

Scale: 1/4" = 1'-0"

0 2' 4' 8'

Scale: 1/4" = 1'-0"

N

FOR CONSTRUCTION

© 2019 STARBUCKS COFFEE COMPANY

STARBUCKS®
2401 UTAH AVENUE SOUTH
SEATTLE, WASHINGTON 98134
(206) 318-1575

THESE DRAWINGS AND THE PROJECT MANUAL ARE CONFIDENTIAL AND SHALL REMAIN THE SOLE PROPERTY OF STARBUCKS CORPORATION, WHICH IS THE OWNER OF THE COPYRIGHT IN THIS WORK. THEY SHALL NOT BE REPRODUCED (IN WHOLE OR IN PART), SHARED WITH THIRD PARTIES OR USED IN ANY MANNER ON OTHER PROJECTS OR EXTENSIONS TO THIS PROJECT WITHOUT THE PRIOR WRITTEN CONSENT OF STARBUCKS CORPORATION. THESE DRAWINGS AND SPECIFICATIONS ARE INTENDED TO EXPRESS DESIGN INTENT FOR A PROTOTYPICAL STARBUCKS STORE (WHICH IS SUBJECT TO CHANGE AT ANYTIME) AND DO NOT REFLECT ACTUAL SITE CONDITIONS. NEITHER PARTY SHALL HAVE ANY OBLIGATION NOR LIABILITY TO THE OTHER (EXCEPT STATED ABOVE) UNTIL A WRITTEN AGREEMENT IS FULLY EXECUTED BY BOTH PARTIES.

STARBUCKS TEMPLATE VERSION: i2021-09-13

Design Forum Architects Inc.
2056 Byers Rd
Miamisburg, OH 45342
Tel: (844) 804-7700
Donald J. Rethman
Architect In Charge
License: AR0017303

Design Forum Engineering
2056 Byers Rd
Miamisburg, OH 45342
Tel: (844) 804-7700
Timothy L. Raberding, PE
Professional Engineer
License: 62078

PROJECT NAME:
US 98 & GRIFFIN RD

PROJECT ADDRESS:
3105 US-98 NORTH
LAKELAND, FLORIDA 33801

STORE #:	80004
PROJECT #:	96892-001
ISSUE DATE:	2025-10-10
DESIGNER:	ASHLEY SUEIRAS
PRODUCTION DESIGNER:	ANDY MCLOUD
CHECKED BY:	DONALD RETHMAN

Revision Schedule

Rev	Date	By	Description
2	08/26/25		REV-2

SHEET TITLE:
OCCUPANCY LOAD PLAN
SCALE: 1/4" = 1'-0"

SHEET NUMBER:
G-002.1

10/9/2025 9:53:17 AM C:\Users\julia.gray\Documents\96892-001_80004_US 98 & Griffin Rd, FL_2025_Julia.gray\FRYY6.rvt

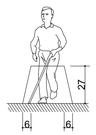

CANE TECHNIQUE

CANE TECHNIQUE

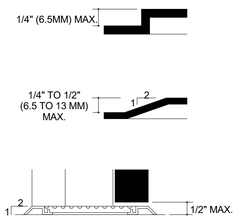

CHANGES IN LEVEL

21 SECTION 4.3 ACCESSIBLE ROUTE
SCALE: NTS

NOTE:

BOTH HIGH AND LOW FOUNTAINS ARE REQUIRED, NO FEWER THAN 50% WHEELCHAIR ACCESSIBLE: OTHERS ARE TO BE LOCATED AT A STANDERED HEIGHT CONVENIENT TO THOSE WITH DIFFICULTY STOOPING. HIGH-LOW FOUNTAINS ARE REQ. WHEN ONLY ONE FOUNTAIN IS APPROVED.

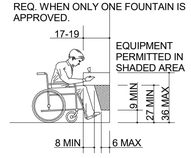

SPOUT HEIGHT AND KNEE CLEARANCE

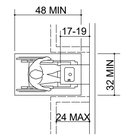

CLEAR FLOOR SPACE

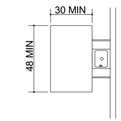

FREE-STANDING FOUNTAIN OR COOLER W/ PROTRUDING OBJECTS RAILS

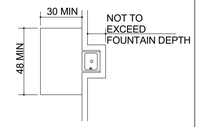

BUILT-IN FOUNTAIN OR COOLER

13 SECTION 4.15 DRINKING FOUNTAINS
SCALE: NTS

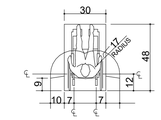

DIMENSIONS OF ADULT-SIZED WHEELCHAIR

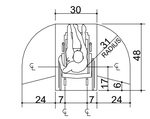

DIMENSIONS OF ADULT-SIZED WHEELCHAIR

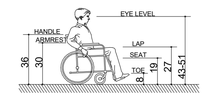

DIMENSIONS OF ADULT-SIZED WHEELCHAIR

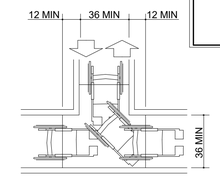

T-SHAPED SPACE FOR 180° TURNS

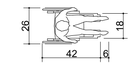

DIMENSIONS OF ADULT-SIZED WHEELCHAIR

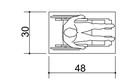

CLEAR FLOOR SPACE

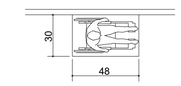

PARALLEL APPROACH

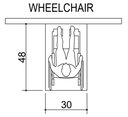

FORWARD APPROACH

NOTE: X = 36" MIN, IF Y = 60"

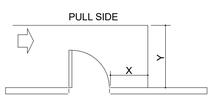

HINGE SIDE APPROACH - SWINGING DOOR

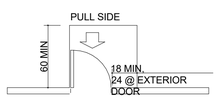

FRONT APPROACH - SWINGING DOOR

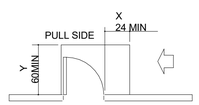

LATCH SIDE APPROACH SWINGING DOOR

NOTE: Y = 48" MIN, IF DOOR HAS CLOSER

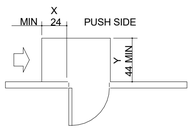

LATCH SIDE APPROACH SWINGING DOOR

NOTE: X = 12" MIN, IF DOOR HAS BOTH A CLOSER AND LATCH

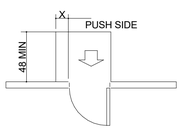

FRONT APPROACH - SWINGING DOOR

NOTE: Y = 48" MIN, IF DOOR HAS BOTH A CLOSER AND LATCH

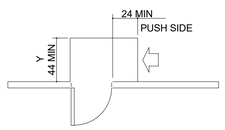

SIDE APPROACH - SWINGING DOOR

FRONT APPROACH - SLIDING OR FOLDING DOORS

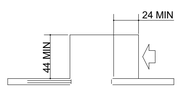

LATCH SIDE APPROACH - SLIDING OR FOLDING DOORS

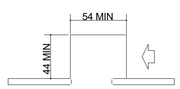

SLIDE SIDE APPROACH - SLIDING OR FOLDING DOORS

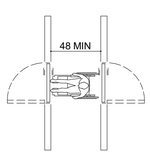

TWO HINGED DOORS IN SERIES

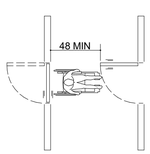

TWO HINGED DOORS IN SERIES

24 SECTION 4.13 DOORS
SCALE: NTS

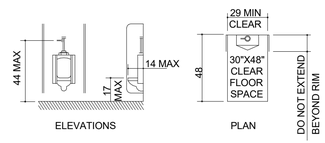

ELEVATIONS PLAN

URINAL CLEARANCES

14 SECTION 4.18 URINALS
SCALE: NTS

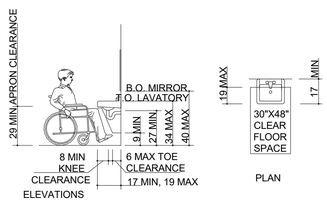

ELEVATIONS PLAN

LAVATORY CLEARANCES

10 SEC. 4.19 LAVATORIES & MIRRORS
SCALE: NTS

NOTE: HORIZONTAL GRAB BARS MEASURED FROM FINISHED FLOOR TO TOP OF GRIPPING SURFACE.

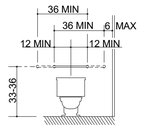

BACK WALL

GRAB BARS AT WATER CLOSETS

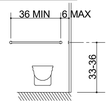

BACK WALL OF STANDARD STALL

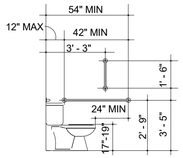

GRAB BARS AT WATER CLOSETS

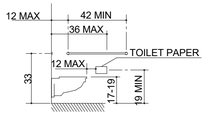

SIDE WALL OF STANDARD STALL

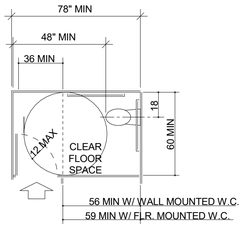

STANDARD STALL (END OF ROW)

16 SECTION 4.17 TOILET STALLS
SCALE: NTS

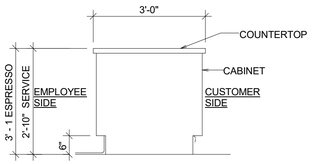

12 TYP SECTION @ COUNTER
SCALE: NTS

ADA SIGNS

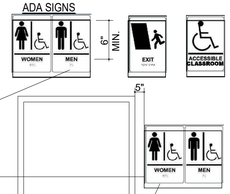

NOTES

1. CHARACTERS AND SYMBOLS SHALL CONTRAST WITH THEIR BACKGROUND.
2. IDENTIFICATION SYMBOLS ARE TO BE ON WALL ADJACENT DOOR 60" ABOVE FLOOR AND ARE TO BE DISTINCTLY DIFFERENT FROM DOOR AND WALL IN COLOR AND CONTRAST.
3. PROVIDE ROOM IDENTIFICATION SIGN ON LATCH SIDE OF DOOR.
4. LETTERS & NUMBERS ON SIGNS SHALL BE RAISED 1/32" MIN., SHALL BE A MIN. OF 5/8" HIGH & SHALL BE SANS-SERIF UPPERCASE CHARACTERS. A.D.A. SIGNAGE ACCOMPANIED BY GRADE 2 BRAILLE.
5. REGULATORY SIGNS TO BE TYPICALLY ADA COMPLIANT TACTILE 3-D PLAQUES PER CODE REQUIREMENTS.
6. SIGNS TO BE A TYPICAL ONE PIECE INJECTION MOLDED FABRICATION WITH RAISED SECOND SURFACE GRAPHICS.
7. SIGN TO BE A CUSTOM COLOR TO MATCH PMS 262C WITH WHITE GRAPHICS.
8. BRAILLE SHOWN IS FOR PLACEMENT ONLY. USE CORRECT BRAILLE FOR SIGN PRODUCTION.
9. 3D TACTILE PLAQUES CAN BE OBTAINED FROM AMERICRAFT CORPORATION (SIGN LANGUAGE) 904 4TH STREET WEST PALMETTO, FL 34221 PH# 1-800-237-3984 FAX 1-813-723-2452

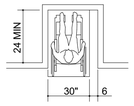

MANEUVERING CLEARANCE FOR ALCOVE

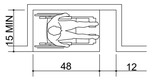

MANEUVERING CLEARANCE FOR ALCOVE

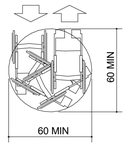

WHEELCHAIR TURNING SPACE

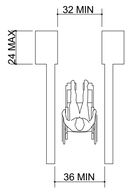

MINIMUM CLEAR WIDTH FOR SINGLE WHEELCHAIR

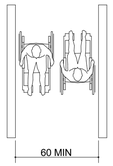

MINIMUM CLEAR WIDTH FOR TWO WHEELCHAIRS

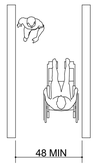

MINIMUM CLEAR WIDTH FOR ONE WHEELCHAIRS

8 SECTION 4.2 SPACE ALLOWANCES
SCALE: NTS

FOR CONSTRUCTION

© 2019 STARBUCKS COFFEE COMPANY

STARBUCKS®
2401 UTAH AVENUE SOUTH
SEATTLE, WASHINGTON 98134
(206) 318-1575

THESE DRAWINGS AND THE PROJECT MANUAL ARE CONFIDENTIAL AND SHALL REMAIN THE SOLE PROPERTY OF STARBUCKS CORPORATION, WHICH IS THE OWNER OF THE COPYRIGHT IN THIS WORK. THEY SHALL NOT BE REPRODUCED (IN WHOLE OR IN PART), SHARED WITH THIRD PARTIES OR USED IN ANY MANNER ON OTHER PROJECTS OR EXTENSIONS TO THIS PROJECT WITHOUT THE PRIOR WRITTEN CONSENT OF STARBUCKS CORPORATION. THESE DRAWINGS AND SPECIFICATIONS ARE INTENDED TO EXPRESS DESIGN INTENT FOR A PROTOTYPICAL STARBUCKS STORE (WHICH IS SUBJECT TO CHANGE AT ANYTIME) AND DO NOT REFLECT ACTUAL SITE CONDITIONS. NEITHER PARTY SHALL HAVE ANY OBLIGATION NOR LIABILITY TO THE OTHER (EXCEPT STATED ABOVE) UNTIL A WRITTEN AGREEMENT IS FULLY EXECUTED BY BOTH PARTIES.

STARBUCKS TEMPLATE VERSION: i2021-09-13

Design Forum Architects Inc.
2056 Byers Rd
Miamisburg, OH 45342
Tel: (844) 804-7700
Donald J. Rethman
Architect In Charge
License: AR0017303

Design Forum Engineering
2056 Byers Rd
Miamisburg, OH 45342
Tel: (844) 804-7700
Timothy L. Raberding, PE
Professional Engineer
License: 62078

PROJECT NAME:
US 98 & GRIFFIN RD

PROJECT ADDRESS:
3105 US-98 NORTH
LAKELAND, FLORIDA 33801

STORE #:	80004
PROJECT #:	96892-001
ISSUE DATE:	2025-10-10
DESIGNER:	ASHLEY SUEIRAS
PRODUCTION DESIGNER:	ANDY MCLOUD
CHECKED BY:	DONALD RETHMAN

Revision Schedule

Rev	Date	By	Description

SHEET TITLE:
ACCESSIBILITY GUIDELINES
SCALE: NO SCALE

SHEET NUMBER:
G-003

10/9/2025 9:53:17 AM C:\Users\julia.gray\Documents\96892-001_80004_US 98 & Griffin Rd, FL_2025_Julia.gray\FRYY6.rvt

GENERAL NOTES

1. GENERAL CONTRACTOR SHALL VISIT THE SITE, REVIEW THE BUILDING SHELL DRAWINGS AS SUBMITTED BY THE LANDLORD OR STARBUCKS SITE SURVEYOR AND BECOME THOROUGHLY FAMILIAR WITH THE SITE CONDITIONS PRIOR TO BIDDING OR CONSTRUCTION.
2. GENERAL CONTRACTOR SHALL CONSULT WITH STARBUCKS CONSTRUCTION MANAGER TO RESOLVE ANY CHANGES, OMISSIONS OR PLAN DISCREPANCIES PRIOR TO BIDDING OR CONSTRUCTION.
3. ALL WORK SHALL BE PERFORMED IN STRICT COMPLIANCE WITH LOCAL, COUNTY, STATE AND FEDERAL CODES AND ORDINANCES.
4. GENERAL CONTRACTOR SHALL VERIFY THE LOCATION OF ALL UTILITIES.
5. GENERAL CONTRACTOR TO VERIFY ALL DIMENSIONS, INCLUDING CLEARANCES REQUIRED BY OTHER TRADES AND NOTIFY STARBUCKS CONSTRUCTION MANAGER OF ANY DISCREPANCIES PRIOR TO PROCEEDING WITH THE WORK. ALL DIMENSIONS ARE TO THE FACE OF THE FINISHED SURFACE UNLESS OTHERWISE NOTED. ALL DIMENSIONS TO BE TAKEN FROM DESIGNATED DATUM POINT. DO NOT SCALE DRAWINGS.
6. GENERAL CONTRACTOR SHALL PATCH AND REPAIR ALL EXISTING WALLS, FLOORS, CEILINGS OR OTHER SURFACES IDENTIFIED TO REMAIN THAT MAY BECOME DAMAGED DURING THE COURSE OF THE WORK.
7. THE GENERAL CONTRACTOR IS RESPONSIBLE FOR OBTAINING PERMITS FOR FIRE PROTECTION, PLUMBING, MECHANICAL AND ELECTRICAL SYSTEMS PRIOR TO INSTALLATION OF SUCH SYSTEMS.
8. GENERAL CONTRACTOR SHALL RETAIN ONE SET OF THE PLANS TO NOTE AND DOCUMENT ALL CHANGES DURING CONSTRUCTION. THIS SET SHALL BE A PART OF THE GENERAL CONTRACTOR'S "STORE CLOSE-OUT PACKAGE" AS DESCRIBED IN THE CONSTRUCTION MANAGEMENT AGREEMENT.
9. GENERAL CONTRACTOR IS RESPONSIBLE FOR COORDINATING DELIVERY OF MATERIALS FROM STARBUCKS CONTRACTED THIRD PARTY LOGISTICS DISTRIBUTION SERVICES AND VENDOR DIRECT SHIPMENTS. REFER TO CONSTRUCTION MANAGEMENT AGREEMENT FOR METHODS AND LEAD TIMES.
10. RESPONSIBILITY FOR SUPPLY AND DELIVERY OF MATERIALS AND EQUIPMENT IS IDENTIFIED IN THE DRAWING SCHEDULE SHEETS UNDER THE COLUMN LABELED "RESPONSIBILITY".
11. FOR THE PURPOSE OF THE DOCUMENTS, TO "INSTALL", SHALL MEAN TO PROVIDE ALL FASTENERS, MISCELLANEOUS HARDWARE, BLOCKING, ELECTRICAL CONNECTIONS, PLUMBING CONNECTIONS, AND OTHER ITEMS REQUIRED FOR A COMPLETE AND OPERATION INSTALLATION, UNLESS OTHERWISE NOTED.
12. ALL ITEM SUBSTITUTIONS MUST BE APPROVED BY THE STARBUCKS DESIGN MANAGER.
13. REFER TO ITEM CUTSHEETS FOR ADDITIONAL INFORMATION.

KEYED NOTES

A1. 30" X 48" CLEAR FOR WHEELCHAIR ACCESS.

A2. 60" DIAMETER CLEAR FOR WHEELCHAIR ACCESS.

A3. POS, HAND-OFF PLANE AND CONDIMENT CART COUNTERTOP ARE 2'-10" (MAX.) AFF FOR WHEELCHAIR ACCESSIBILITY.

A4. ALL THRESHOLDS TO BE ADA COMPLIANT PER ALL APPLICABLE CODES.

A5. ADA TABLE TOPS SHALL BE 28" MINIMUM AND 34" MAXIMUM IN HEIGHT ABOVE THE FLOOR. KNEE CLEARANCE SHALL BE A MINIMUM OF 27" IN HEIGHT ABOVE THE FLOOR AND 30" MINIMUM IN WIDTH.

A6. BARRIER FREE PATH OF TRAVEL.

A7. ADA MANEUVERING CLEARANCE AT DOORS; FRONT APPROACH , PUSH SIDE, DOOR PROVIDED WITH CLOSER: 48"MIN. BY 48" MIN.

A8. ADA MANEUVERING CLEARANCE AT DOORS; FRONT APPROACH , PULL SIDE, DOOR PROVIDED WITH CLOSER: 54"MIN. BY 60" MIN.

A9. HAND SINKS AND LAVATORIES TO BE 2'-10" AFF AND 30" X 48" CLEAR FOR WHEELCHAIR ACCESSIBILITY.

A10. ADA MANEUVERING CLEARANCE AT DOORS; FRONT APPROACH , PUSH SIDE, DOOR PROVIDED WITH CLOSER: 48"MIN. BY 54" MIN.

A11. ADA MANEUVERING CLEARANCE AT DOORS; FRONT APPROACH, PULL SIDE, DOOR PROVIDED WITH CLOSER: 60" MIN. BY 60" MIN.

A12. ADA MANEUVERING CLEARANCE AT DOORS; FRONT APPROACH, PULL SIDE, DOOR PROVIDED WITH CLOSER: 36" MIN BY 48" MIN.

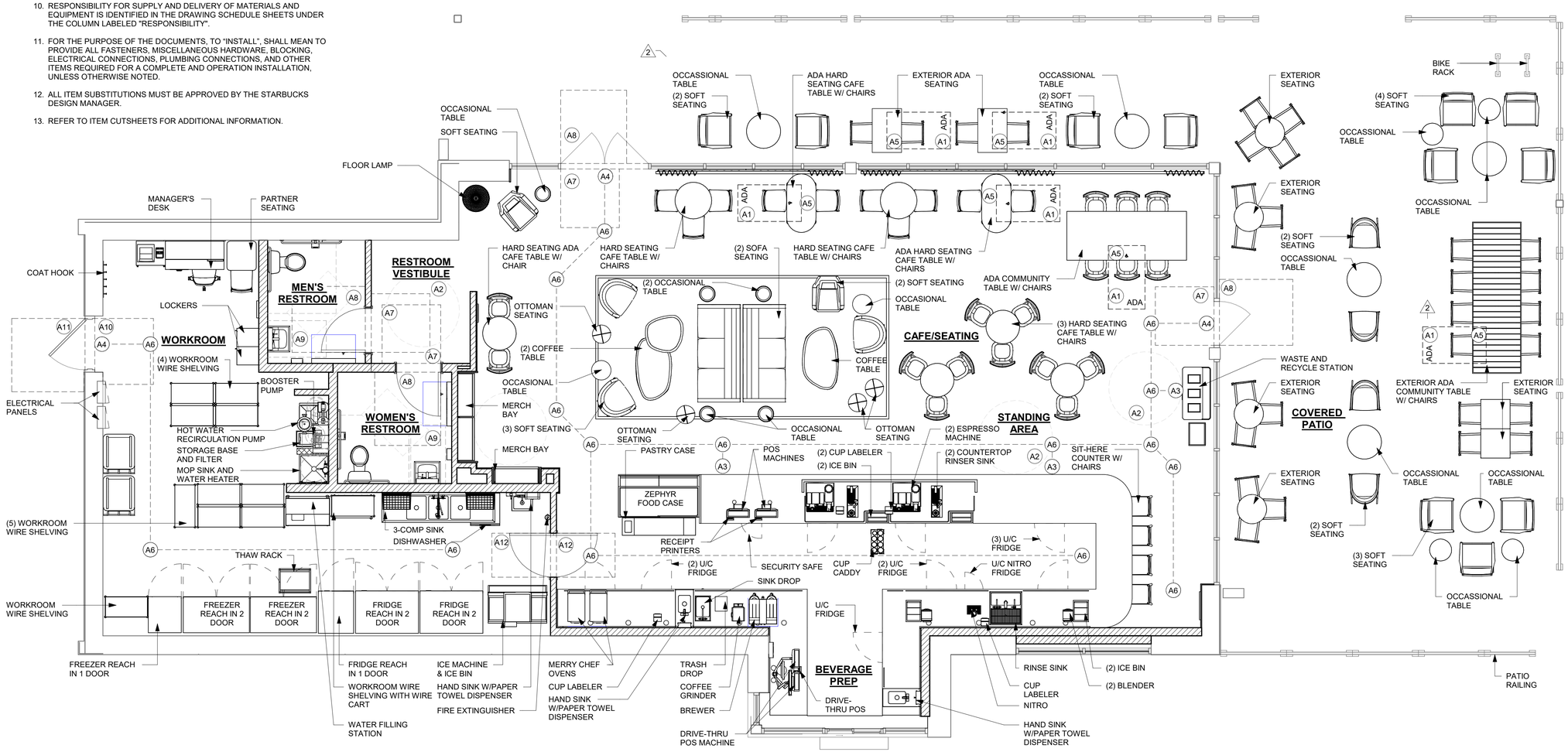

1 FOOD SERVICE PLAN
Scale: 1/4" = 1'-0"

FOR CONSTRUCTION

© 2019 STARBUCKS COFFEE COMPANY

STARBUCKS®
2401 UTAH AVENUE SOUTH
SEATTLE, WASHINGTON 98134
(206) 318-1575

THESE DRAWINGS AND THE PROJECT MANUAL ARE CONFIDENTIAL AND SHALL REMAIN THE SOLE PROPERTY OF STARBUCKS CORPORATION, WHICH IS THE OWNER OF THE COPYRIGHT IN THIS WORK. THEY SHALL NOT BE REPRODUCED (IN WHOLE OR IN PART), SHARED WITH THIRD PARTIES OR USED IN ANY MANNER ON OTHER PROJECTS OR EXTENSIONS TO THIS PROJECT WITHOUT THE PRIOR WRITTEN CONSENT OF STARBUCKS CORPORATION. THESE DRAWINGS AND SPECIFICATIONS ARE INTENDED TO EXPRESS DESIGN INTENT FOR A PROTOTYPICAL STARBUCKS STORE (WHICH IS SUBJECT TO CHANGE AT ANYTIME) AND DO NOT REFLECT ACTUAL SITE CONDITIONS. NEITHER PARTY SHALL HAVE ANY OBLIGATION NOR LIABILITY TO THE OTHER (EXCEPT STATED ABOVE) UNTIL A WRITTEN AGREEMENT IS FULLY EXECUTED BY BOTH PARTIES.

STARBUCKS TEMPLATE VERSION: i2021-09-13

Design Forum Architects Inc.
2056 Byers Rd
Miamisburg, OH 45342
Tel: (844) 804-7700
Donald J. Rethman
Architect In Charge
License: AR0017303

Design Forum Engineering
2056 Byers Rd
Miamisburg, OH 45342
Tel: (844) 804-7700
Timothy L. Raberding, PE
Professional Engineer
License: 62078

PROJECT NAME:
US 98 & GRIFFIN RD

PROJECT ADDRESS:
3105 US-98 NORTH
LAKELAND, FLORIDA 33801

STORE #:	80004
PROJECT #:	96892-001
ISSUE DATE:	2025-10-10
DESIGNER:	ASHLEY SUEIRAS
PRODUCTION DESIGNER:	ANDY MCLOUD
CHECKED BY:	DONALD RETHMAN

Revision Schedule

Rev	Date	By	Description
2	08/26/25		REV-2

SHEET TITLE:
FOOD SERVICE PLAN

SCALE: 1/4" = 1'-0"

SHEET NUMBER:
G-004

10/9/2025 9:53:21 AM C:\Users\julia.gray\Documents\96892-001_80004_US 98 & Griffin Rd, FL_2025_Julia.grayFRYY6.rvt

GC REQUIREMENTS FOR STARBUCKS GREENER STORES

☒ PRE-CHECKED ITEMS ARE LEED PREREQUISITES FOR NEW AND RELOCATED COMPANY OWNED STORES. PLEASE REFER TO THE LEED SCORECARD TO VERIFY TARGETED CREDITS.

BEFORE CONSTRUCTION

☐ TALK TO WASTE HAULER TO MAKE SURE THEY CAN RECYCLE AT LEAST 50% OF YOUR CONSTRUCTION WASTE.

☐ YOU WILL NEED TO SUBMIT DUMP TICKETS AND DIVERSION RATES SHOWING AT LEAST 50% WAS RECYCLED.

☐ CONFIRM CO-MINGLED RECYCLER CAN PROVIDE A DIVERSION RATE BASED ON WEIGHT OF INDIVIDUAL RECYCLABLES (WOOD, METAL, ADC, CONCRETE ETC.). DIVERSION RATE CAN BE BY CONTAINER OR A FACILITY WIDE AVERAGE (MONTHLY OR ANNUAL). VISUAL CLASSIFICATION IS NOT ACCEPTABLE.

☐ SOURCE-SEPARATED RECYCLABLES DO NOT NEED A PUBLISHED DIVERSION RATE AND CAN BE ASSUMED TO BE 100%.

☐ REVIEW IAQ MANAGEMENT PLAN WITH PROJECT TEAM (FOUND IN THE GC ADMINISTRATION HANDBOOK).

☐ REVIEW PRE-APPROVED PRODUCT LIST WITH PROJECT TEAM (FOUND IN THE GC ADMINISTRATION HANDBOOK).

☐ ENSURE THAT THE ENTIRE CONSTRUCTION TEAM, INCLUDING SUB-CONTRACTORS, ARE AWARE OF THEIR LEED ROLES AND RESPONSIBILITIES.

DURING CONSTRUCTION

☒ INSTALL LOW-FLOW TOILETS AND AERATORS (1.28 GPF OR BETTER, 0.5 GPM AERATORS, 1.2 GPM PRE-RINSE SPRAY VALVE).

☐ KEEP TRACK OF DUMP TICKETS.

☐ KEEP TRACK OF ADHESIVES, SEALANTS, PAINTS AND OTHER EQc4 PRODUCTS USED.

☐ POST IAQ MANAGEMENT PLAN ON THE JOB SITE.

☐ POST PRE-APPROVED PRODUCT LIST.

☐ COMPLETE 2 SITE INSPECTION CHECKLISTS TO VERIFY BEST PRACTICES USED FOR MAINTAINING GOOD INDOOR AIR QUALITY DURING CONSTRUCTION. PHOTOS CAN HELP DOCUMENT THESE:

CLEAN WORK SITE AT BEGINNING OR END OF EACH DAY TO CONTROL DUST.

MAKE SURE DUCT WORK IS DELIVERED WITH ENDS COVERED.

PROTECT DUCTWORK BY SEALING OPENINGS IMMEDIATELY AFTER INSTALLATION.

IF THE USE OF THE PERMANENT HVAC EQUIPMENT IS UNAVOIDABLE DURING CONSTRUCTION, INSTALL A TEMPORARY MERV 8 FILTER ON ALL SUPPLY AND RETURN GRILLES AND OPENINGS, TO BE REPLACED WITH NEW MERV 8 FILTERS BEFORE TAB WORK AND FINAL SYSTEM COMMISSIONING.

USE WALK-OFF MATS AT ENTRIES FOR DUST CONTROL.

USE FAN OR OTHER METHOD OF CLEARING DUST FROM AIR DURING CONSTRUCTION.

KEEP DELIVERED BUT NOT-YET-INSTALLED EQUIPMENT/MATERIALS COVERED IN PLASTIC AND RAISED OFF OF THE GROUND TO PREVENT MOISTURE DAMAGE.

DO NOT INSTALL CONTAMINATED MATERIALS.

POST NO SMOKING SIGN.

USE LOW VOC PRODUCTS, AS PER PRE-APPROVED LIST, OR VERIFIED VIA MSD SHEETS.

USE ELECTRIC TOOLS WITH VACUUM-ASSIST, NOT GAS-POWERED TOOLS.

CUT AND FABRICATE MATERIALS OUTSIDE WHENEVER POSSIBLE.

AT END OF CONSTRUCTION

SUBMIT:

☒ TAB REPORT, WITH ACTUAL OUTSIDE AIR VOLUMES INDICATED AND BALANCED AS PER DESIGN CFM ON DRAWINGS.

☐ TWO IAQ SITE INSPECTION CHECKLISTS.

☐ SIGNED EQc4 AFFIDAVIT -OR- FILL OUT EQc4 REPORT IF USED NON-PREAPPROVED PRODUCTS FOR LOW-EMITTING MATERIALS: PAINTS, COATINGS, ADHESIVES, SEALANTS, CEILINGS, WALLS AND COMPOSITE WOOD PRODUCTS.

☐ CONSTRUCTION WASTE MANAGEMENT REPORT.

☐ PROOF OF CONSTRUCTION WASTE DIVERSION RATE VIA DUMP TICKETS, SUMMARY REPORT OR RECYCLING FACILITY DIVERSION RATE.

VERIFY:

☒ ENSURE LOW-FLOW FIXTURES ARE INSTALLED:

☒ TOILETS: 1.28 GPF OR BETTER

☒ HAND SINKS: 0.5 GPM AERATORS

☒ PRE-RINSE SPRAY VALVE: 1.2 GPM

☐ BICYCLE RACK IS INSTALLED

☐ BICYCLE REPAIR KIT IS ON-SITE

☐ ENSURE A COMBINATION OF OVERHANGS AND/OR BLINDS ARE INSTALLED FOR ALL WINDOWS TO MITIGATE SOLAR HEAT GAIN AND GLARE.

☐ GREEN EDUCATION DISKS ARE INSTALLED AS INDICATED ON DRAWINGS.

CONTRACTOR RESPONSIBILITIES FOR BUILDING COMMISSIONING

CONTRACTOR SHALL PROVIDE SUPPORT AND WORKS AS SPECIFIED, NEEDED AND REQUIRED TO CONDUCT AND FACILITATE STARBUCKS STAFF BUILDING COMMISSIONING EFFORTS. THIS WORK WILL BE COMPRISED OF THREE DISTINCT EFFORTS:

1. SUPPORT STARBUCKS COMMISSIONING AGENT (CXA) DURING INSTALLATION VERIFICATION AND CORRECT DISCLOSED DEFICIENCIES;

2. PERFORM TESTING, ADJUSTING, BALANCING AND SYSTEM STARTUP AND SUPPORT FUNCTIONAL PERFORMANCE TESTING BY STARBUCKS CXA; 3) CORRECT DEFICIENCIES DISCLOSED BY FUNCTIONAL PERFORMANCE TESTING AND SUBMIT REPORTS. CONTRACTOR SHALL PERFORM AND PROVIDE THE FOLLOWING:

A. SYSTEMS SUBJECT TO COMMISSIONING MAY INCLUDE, BUT ARE NOT LIMITED TO, DOMESTIC HOT WATER GENERATION, HVAC SYSTEMS, ROOFTOP UNITS, EXHAUST FANS, HVAC CONTROLS, LIGHTING CONTROLS, AIR CURTAINS, BUILT-INN REFRIGERATION EQUIPMENT AND RENEWABLE ENERGY SYSTEMS.

B. CONTRACTOR SHALL INCLUDE COMMISSIONING ACTIVITIES IN PROJECT SCHEDULE AND SHOW INTERVALS FOR PERFORMANCE OF WORK FOR WHICH CONTRACTOR IS RESPONSIBLE AND INTERVALS FOR WORK PERFORMED BY STARBUCKS CXA. CONTRACTOR SHALL SHOW RESOURCES FOR PERFORMING ALL WORK RELATED TO COMMISSIONING ACTIVITIES ON A LINE ITEM IN THE SCHEDULE OF VALUES.

C. CONTRACTOR SHALL INSTALL EQUIPMENT IN ACCORDANCE WITH THE MANUFACTURER'S REQUIREMENTS AND ALL CONTRACT DOCUMENTS. ENSURE THAT ALL EQUIPMENT IS INSTALLED TOTALLY COMPLETE AND ACCESSIBLE TO STARBUCKS CXA FOR INSTALLATION VERIFICATION AND FUNCTIONAL PERFORMANCE TESTING PRIOR TO THE SCHEDULED START OF INSTALLATION VERIFICATIONS.

D. INSTALLATION VERIFICATION SHALL BE PERFORMED BY STARBUCKS' CXA. CONTRACTOR SHALL SUPPORT STARBUCKS CXA INSTALLATION VERIFICATION EFFORTS AS NECESSARY. PROVIDE ALL ACCESS AND EQUIPMENT NECESSARY FOR STARBUCKS STAFF TO VERIFY THAT THE EQUIPMENT IS INSTALLED CORRECTLY.

E. CONTRACTOR SHALL BE READILY AVAILABLE DURING INSTALLATION VERIFICATION TO CORRECT ANY DEFICIENCIES OR DEFECTS DISCLOSED BY THE INSTALLATION VERIFICATION PROCESS. CORRECTIONS SHALL BE MADE IN A TIMELY MANNER WITHOUT DISRUPTION OF THE CONSTRUCTION SCHEDULE.

F. ALL HVAC, EXHAUST FAN AND AIR CURTAIN EQUIPMENT SHALL BE TESTED, ADJUSTED AND BALANCED BY THE CONTRACTORS TESTING, ADJUSTING AND BALANCE AGENT (SEE TESTING, ADJUSTING AND BALANCING) AFTER THE SYSTEM IS VERIFIED TO BE COMPLETE AND CORRECT BY STARBUCKS CXA, IN ACCORDANCE WITH THE REQUIREMENTS OF THESE DOCUMENTS. ALL HVAC CONTROL SYSTEMS SHALL BE TESTED TO ENSURE THAT CONTROL DEVICES, COMPONENTS, EQUIPMENT AND SYSTEMS ARE CALIBRATED, ADJUSTED AND OPERATE IN ACCORDANCE WITH THESE PLANS AND SPECIFICATIONS. SEQUENCES OF OPERATION CALIBRATED, ADJUSTED AND OPERATE IN ACCORDANCE WITH THESE PLANS AND SPECIFICATIONS. SEQUENCES OF OPERATION SHALL BE TESTED TO ENSURE THAT THEY OPERATE IN ACCORDANCE WITH THE CONTRACT REQUIREMENTS. DELIVERABLES: PRELIMINARY, WRITTEN TESTING AND AIR BALANCE REPORT CONFORMING TO THE REQUIREMENTS SPECIFIED HEREIN, DOCUMENTING THE INFORMATION SPECIFIED, ETC. TO THE STARBUCKS CXA IMMEDIATELY UPON COMPLETION OF THE WORK.

G. CONTRACTOR SHALL INFORM STARBUCKS CXA WHEN EQUIPMENT IS READY FOR FUNCTIONAL PERFORMANCE TESTING. ALL EQUIPMENT SHALL BE READY FOR FUNCTIONAL PERFORMANCE TESTING PRIOR TO STARTING TESTING. CONTRACTOR SHALL OPERATE EQUIPMENT FOR STARBUCKS CXA AND VERIFY BY DEMONSTRATION THE CORRECT OPERATION OF EQUIPMENT, RESPONSE OF SENSORS AND PROPER EXECUTION OF HVAC CONTROL AND LIGHTING SEQUENCES; INCLUDING BUT NOT LIMITED TO AIR MOVEMENT, TEMPERATURE, SOUND AND CONTROL RESPONSE. PROVIDE ANY SECURITY ACCESS, HARDWARE, SOFTWARE OR OTHER SUPPORT AS NEEDED FOR THE STARBUCKS CXA TO EFFICIENTLY WITNESS AND DOCUMENT ALL EQUIPMENT TESTING. STARBUCKS CXA WILL RECORD TED EQUIPMENT OPERATION AND RESPONSE TO TESTING SEQUENCES AND PREPARE A LIST OF ANY DEFICIENCIES DISCLOSED BY THE FUNCTIONAL PERFORMANCE TESTS FOR CORRECTION BY THE CONTRACTOR. EQUIPMENT INCLUDES BUT IS NOT LIMITED TO, AIR HANDLING UNITS, ROOFTOP AND SPLIT TYPE, CONDENSING UNITS, EXHAUST FANS, LIGHTING CONTROLS, ETC. DELIVERABLES: PROVIDE COMPLETED COPIES OF ALL START UP REPORTS, FILLED OUT ON THE MANUFACTURERS FORMS, TO THE STARBUCKS CXA.

H. CONTRACTOR IS RESPONSIBLE FOR CORRECTING ANY ISSUES OR DEFICIENCIES DISCLOSED DURING THE FUNCTIONAL PERFORMANCE TESTING PROCESS. CORRECTIONS SHOULD BE MADE IN A TIMELY MANNER WITHOUT DISRUPTION TO THE SYSTEM AND CONSTRUCTION SCHEDULE.

I. CONTRACTOR SHALL BE READILY BE AVAILABLE FOR ANY RE-TESTING OF EQUIPMENT DEEMED NECESSARY BY STARBUCKS CXA DURING INSTALLATION VERIFICATION AND FUNCTIONAL PERFORMANCE TESTING. CONTRACTOR IS RESPONSIBLE FOR CORRECTING ANY ISSUES OR DEFICIENCIES FOUND IN THE SYSTEM DURING ANY AND ALL RETESTING. CORRECTIONS SHOULD E MADE IN A TIMELY MANNER WITHOUT DISRUPTION TO THE SYSTEM AND CONSTRUCTION SCHEDULE. DELIVERABLES: FINAL BALANCE REPORT, DEFICIENCIES LIST NOTING CORRECTIVE ACTIONS PERFORMED BY CONTRACTOR IN RESPONSE TO INSTALLATION VERIFICATION AND FUNCTIONAL PERFORMANCE TEST RESULTS.

J. CONSTRUCTION AND POST CONSTRUCTION TESTING: ADDITIONAL TESTING MAY BE REQUIRED BY LEED AND OTHER PROCESSES THAT MAY OCCUR OUT OF SEQUENCE WITH COMMISSIONING SERVICE. CONTRACTOR SHALL CONDUCT, DOCUMENT, SUPPORT AND SCHEDULE THIS TESTING AS DIRECTED BY STARBUCKS CXA.

FOR CONSTRUCTION

© 2019 STARBUCKS COFFEE COMPANY

STARBUCKS®
2401 UTAH AVENUE SOUTH
SEATTLE, WASHINGTON 98134
(206) 318-1575

THESE DRAWINGS AND THE PROJECT MANUAL ARE CONFIDENTIAL AND SHALL REMAIN THE SOLE PROPERTY OF STARBUCKS CORPORATION, WHICH IS THE OWNER OF THE COPYRIGHT IN THIS WORK. THEY SHALL NOT BE REPRODUCED (IN WHOLE OR IN PART), SHARED WITH THIRD PARTIES OR USED IN ANY MANNER ON OTHER PROJECTS OR EXTENSIONS TO THIS PROJECT WITHOUT THE PRIOR WRITTEN CONSENT OF STARBUCKS CORPORATION. THESE DRAWINGS AND SPECIFICATIONS ARE INTENDED TO EXPRESS DESIGN INTENT FOR A PROTOTYPICAL STARBUCKS STORE (WHICH IS SUBJECT TO CHANGE AT ANYTIME) AND DO NOT REFLECT ACTUAL SITE CONDITIONS. NEITHER PARTY SHALL HAVE ANY OBLIGATION NOR LIABILITY TO THE OTHER (EXCEPT STATED ABOVE) UNTIL A WRITTEN AGREEMENT IS FULLY EXECUTED BY BOTH PARTIES.

STARBUCKS TEMPLATE VERSION: i2021-09-13

Design Forum Architects Inc.
2056 Byers Rd
Miamisburg, OH 45342
Tel: (844) 804-7700
Donald J. Rethman
Architect In Charge
License: AR0017303

Design Forum Engineering
2056 Byers Rd
Miamisburg, OH 45342
Tel: (844) 804-7700
Timothy L. Raberding, PE
Professional Engineer
License: 62078

PROJECT NAME:
US 98 & GRIFFIN RD

PROJECT ADDRESS:
3105 US-98 NORTH
LAKELAND, FLORIDA 33801

STORE #:	80004
PROJECT #:	96892-001
ISSUE DATE:	2025-10-10
DESIGNER:	ASHLEY SUEIRAS
PRODUCTION DESIGNER:	ANDY MCLOUD
CHECKED BY:	DONALD RETHMAN

Revision Schedule

Rev	Date	By	Description

SHEET TITLE:
GREENER STORE INFORMATION
SCALE: NO SCALE

SHEET NUMBER:
G-005

10/9/2025 9:53:22 AM C:\Users\julia.gray\Documents\96892-001_80004_US 98 & Griffin Rd, FL_2025_Julia.grayFRYY6.rvt

PRE-APPROVED LIST FOR LOW EMMITING MATERIALS

MANUFACTURER - PRODUCT VOC CONTENT	
ABS WELDING ADHESIVE	**LIMIT 325 g/L**
IPS CORPORATION - WELD-ON 2771 AND 2773 - ABS PIPE CEMENT	325 g/L
IPS CORPORATION - WELD-ON 773 - ABS PIPE CEMENT	<325 g/L
OATEY - LO-VOC ABS BLACK SOLVENT CEMENT	325 g/L
CARPET ADHESIVE	**LIMIT 50 g/L**
HB FULLER - TEC 749 RELEASE PRESS	0 g/L
MAPEI - ULTRABOND ECO 120	43 g/L
MAPEI - ULTRABOND ECO 800	0 g/L
ROBERTS - 6700 SUPERIOR	0 g/L
CERAMIC TILE ADHESIVE	**LIMIT 65 g/L**
DUPONT SURFACES - CORIAN SOLID SURFACES JOINT ADHESIVE	<50 g/L
LATICRETE - 252 SILVER	0 g/L
LATICRETE - 254 PLATINUM	0.5 g/L
LATICRETE - 255 MULTIMAX	0 g/L
LATICRETE - 317 THIN SET	2.5 g/L
MAPEI - KERABOND	0 g/L
MAPEI - KERASET	0 g/L
MAPEI - PLANIPATCH	0 g/L
MAPEI - PLANIPATCH PLUS	53 g/L
MAPEI - TYPE 1	60 g/L
MAPEI - ULTRAFLEX 1	0 g/L
MAPEI - ULTRAFLEX 2	0 g/L
MAPEI - ULTRAFLEX S2 MONO	<12 g/L
MAPEI - ULTRAMASTIC ECO	57 g/L
RAECO - R-2000 BONDING AGENT	2.5 g/L
CONTACT ADHESIVE	**LIMIT 80 g/L**
3M - FASTBOND CONTACT ADHESIVE	77 g/L
HENKEL - LEPAGE CONTACT CEMENT	<10 g/L
HENKEL - LEPAGE PRES-TITE GREEN CONTACT CEMENT	<10 g/L
CPVC ADHESIVE	**LIMIT 490 g/L**
OATLEY - HEAVY DUTY CPVC ORANGE SOLVENT CEMENT	77 g/L
OATLEY - FLOWGUARD GOLD ALL WEATHER 1 STEP SOLVENT CEMENT	<10 g/L
DRYWALL AND PANEL ADHESIVE	**LIMIT 50 g/L**
DATENBLATT_A814 - PART A AND B	0 g/L
FRANKLIN INTERNATIONAL - MARLITE C-551	2.6 g/L
FRANKLIN INTERNATIONAL - TITEBOND SOLVENT FREE FAST GRAB	2.6 g/L
LIQUID NAILS - FRP - 310	34 g/L
GREEN GLUE COMPANY - GREEN GLUE	<5 g/L
ROMAN - PRO-774	0 g/L
MULIT-PURPOSE CONSTRUCTION ADHESIVE	**LIMIT 70 g/L**
3M - SCOTCH-WELD URETHANE ADHESIVE DP-620NS, BLACK	<10 g/L
ELMER'S - CARPENTER'S INTERIOR WOOD GLUE	<1 g/L
EVERBUILD - GUN A NAIL STANDARD	25.3 g/L
FRANKLIN INTERNATIONAL - TITEBOND III WOOD GLUE	5.6 g/L
HENKEL - LEPAGE CARPENTER'S GLUE	<2 g/L
HENKEL - LEPAGE EPOXY RESIN	.38 g/L
HENKEL - LEPAGE PL PREMIUM	45 g/L
LIQUID NAILS - LN 704	22 g/L
LIQUID NAILS - LN 903	<70 g/L
ROMAN - PRO-838	17.2 g/L
ROMAN - PRO-880	<50 g/L
ROMAN - PRO-935	8 g/L
SIKA - SIKABOND	48.3 g/L

PRE-APPROVED LIST FOR LOW EMMITING MATERIALS

MANUFACTURER - PRODUCT VOC CONTENT	
PVC WELDING	**LIMIT 510 g/L**
IPS CORPORATION - IPEX SYS 15 GREY	<510 g/L
IPS CORPORATION - WELD_ON 782 CLEAR CEMENT FOR PVC	<510 g/L
IPS CORPORATION - WELD-ON 711 LOW VOC PIPE CEMENT	<510 g/L
IPS CORPORATION - WELD-ON 780 CLEAR CEMENT FOR PVC	<510 g/L
IPS CORPORATION - WELD-ON 781 CLEAR CEMENT FOR PVC	<510 g/L
IPS CORPORATION - WELD-ON 781 GREY CEMENT FOR PVC	<510 g/L
IPS CORPORATION - WELD-ON 810 - 2 COMPONENT ADHESIVE	50 g/L
IPS CORPORATION - WELD-ON DUIT 413 - PVC PIPE CEMENT	510 g/L
OATEY - CLEAR ADVANCED PVC CEMENT	<510 g/L
TIGRE - ADESIVO AQUATHERM (AQUATHERM E ESPECIAL) CPVC	330 g/L
TIGRE - ADESIVO PLASTICO PARA PVC - INCOLOR	332.14 g/L
ADHESIVE PRIMER FOR PLASTIC	**LIMIT 550 g/L**
IPS CORPORATION - WELD-ON PLUMBING CLEAR PRIMER FOR PVC	550 g/L
IPS CORPORATION - WELD-ON PLUMBING PURPLE PRIMER FOR PVC	550 g/L
OATLEY - PURPLE PRIMER NSF LISTED	550 g/L
SPECIAL PURPOSE AEROSOL ADHESIVE	**LIMIT 70% BY WEIGHT**
IPS CORPORATION - WELD-ON PLUMBING CLEAR PRIMER FOR PVC	64%
SUBFLOOR ADHESIVE	**LIMIT 50 g/L**
FRANKLIN INTERNATIONAL - GREENCHOICE WEATHERPROOF SUBFLOOR ADHESIVE (TITEBOND)	550 g/L
HENKEL - OSI PRO SERIES 450 SUBFLOOR ADHESIVE	<2 g/L
VCT ADHESIVE	**LIMIT 50 g/L**
BALL - STYCCIBOND F44	48 g/L
ROMAN - VOV 11901	5 g/L
ROMAN - VOV 11905	5 g/L
WOOD FLOORING ADHESIVE	**LIMIT 100 g/L**
ARMSTRONG WORLD INDUSTRIES - EVERLAST PREMIUM URETHANE	77 g/L
ARMSTRONG WORLD INDUSTRIES - HARTCO 57 WOOD FLOORING - URETHANE	65 g/L
ARMSTRONG WORLD INDUSTRIES - PROCONNECT WOOD FLOORING - ACRYLIC	7 g/L
HENKEL - LOCTITE PL400 SUBFLOOR ADHESIVE	5.2 g/L
SIKA CORPORATION - SIKABOND-T54 - URETHANE	30.38 g/L
SIKA CORPORATION - SIKABOND-T55 - URETHANE	83 g/L
ARCHITECTURAL SEALANT	**LIMIT 250 g/L**
3M - FIRE BARRIER CP-25WB+	<1 g/L
3M - FIRE BARRIER MOLDABLE PUTTY+	0 g/L
BALL - STOPGP P131 PRIMER	15 g/L
BASF - SONOLASTIC	<100 g/L
CERTAINTEED - PROROC READY-MIX JOINT COMPOUND	0 g/L
CUSTOM BUILDING PRODUCTS - POLYBLEND SANDED GROUT	0 g/L
DAP - ALEX PAINTERS'S ACRYLIC LATEX CAULK - ALL COLORS	59.2 g/L
DAP - ALEX PLUS ACRYLIC LATEX CAULK SILICONE - CLEAR	44.4 g/L
DAP - DYNAFLEX 230	49 g/L
DAP - KWIK SEAL TUB & TILE CAULKING - ALL COLORS	25.4 g/L
DAP - SILICONE PLUS RUBBER KITCHEN & BATH SEALANT	<40 g/L
DATENBLATT - PCI ZEMTEC 1K	.015 g/L
DATENBLATT - MAPESIL AC	26 g/L
DESIGN POLYMERICS - 1010 WATER BASED DUCT SEALANT	0 g/L
DESIGN POLYMERICS - 1020 WATER BASED DUCT SEALANT	0 g/L
DESIGN POLYMERICS - 1030 WATER BASED DUCT SEALANT	0 g/L
DOW CORNING - 732 SILICONE	35 g/L
DOW CORNING - 786 SILICONE	33 g/L
DOW CORNING - HVAC/R SILICONE	33 g/L
DYE-N-SEAL-DECORATIVE CONCRETE DYE	0 g/L

PRE-APPROVED LIST FOR LOW EMMITING MATERIALS

MANUFACTURER - PRODUCT VOC CONTENT	
ARCHITECTURAL SEALANT	**LIMIT 250 g/L**
DUCTMATE INDUSTRIES - PRO SEAL	41 g/L
EUCLID CHEM CO - CLEARSEAL WB 150	134 g/L
GE - SILICONE SEALANT	20 g/L
GRABBER - GRABBERGARD EFC	32.5 g/L
HAMILTON DRYWALL PRODUCTS - POWDERED JOINT CEMENT	0 g/L
HARDCAST CARLISLE - DUCTSEAL 321	75 g/L
HARDCAST CARLISLE - IRONGRIP 601	49 g/L
HENKEL - OSI PRO-SERIES	<50 g/L
HERCULES - STAY PUT PUTTY	0 g/L
IDEAL CHEMICAL PRODUCTS - IDEALSEAL UNIVERSAL SILICONE	0 g/L
IPS - WELD-ON ALL SEAL PIPE JOINT COMPOUND	0 g/L
LATICRETE - 1500 SANDED GROUT	0 g/L
LATICRETE - 1600 UNSANDED GROUT	0 g/L
LATICRETE - LATASIL SILICONE	37.16 g/L
LATICRETE - PERMACOLOR GROUT	0 g/L
LATICRETE - PREMIUM ACRYLIC CAULK	50 g/L
LATICRETE - SPECTRALOCK	.031 g/L
MAPEI - KERACAULK S	41 g/L
MAPEI - KERACOLOR S	0 g/L
MAPEI - KERACOLOR U	0 g/L
MAPEI - KERALASTIC MORTAR	0 g/L
MAPEI - KERAPLY	3 g/L
MAPEI - KERAPOXY - PART A	7 g/L
MAPEI - KERAPOXY IEG - PART A	21 g/L
MAPEI - ULTRACOLOR PLUS	0 g/L
MAPEI - ULTRACONTACT	0 g/L
MAPEI - ULTRAFLEX LFT	0 g/L
MAPEI - ULTRALITE MORTAR	0 g/L
MAPEI - ULTRALITE MORTAR PRO	0 g/L
MOMENTIVE - SCS1000 SILICONE SEALANT	20 g/L
MOMENTIVE - SILICONE RUBBER SEALANT	27 g/L
NATIONAL GYPSUM - READY MIX JOINT COMPOUNDS - PROFORM (MULTIPLE PRODUCTS)	2 g/L
NR4000 - WHITE LIGHTNING SILICONIZED ACRYLIC LATEX CAULK	43 g/L
OATEY - GREAT WHITE PJC	3 g/L
OATEY - PLUMBERS PUTTY	0 g/L
PCI SECCORAL 1 K	1.5 g/L
POLYMER ADHESIVE - AIRSEAL #22	<21 g/L
POLYMER ADHESIVE - AIRSEAL #33	35 g/L
REDGARD - F1051	5 g/L
RIGIPS - SUPER FUGENFULLER JOINT COMPOUND	0.009 g/L
SICHERHEITSDATENBLATT - BRILLUX ACRYLIC SEALANT 395	20 g/L
SICHERHEITSDATENBLATT - BRILLUX AIRLESS-SPACHTEL 1890	1 g/L
SICHERHEITSDATENBLATT - BRILLUX RIGIPS	0.0009 g/L
SICHERHEITSDATENBLATT - BRILLUX CREAGLAS ELF 377	1 g/L
SICHERHEITSDATENBLATT - BRILLUX UNIFLOTT 6 JOINT COMPOUND	0 g/L
SICHERHEITSDATENBLATT - BRILLUX UNIFLOTT 8 JOINT COMPOUND	0 g/L
SIKAGARD - HIGH GLOSS CLEAR SEALER	<20 g/L
SOLOCROM - JUNTA PLAC MASILLA	3 g/L
SONNEBORN, DIVISION OF BASF - OMNI-PLUS	0 g/L
SONNEBORN, DIVISION OF BASF - SONOLAC	41 g/L
SOUDAL - FIX ALL CLASSIC	33.4 g/L
SPECSEAL - SERIES SSS INTUMESCENT SEALANT	22 g/L
TITEBOND - PAINTER'S PLUS CAULK - CLEAR	28 g/L
TITEBOND - PAINTER'S PLUS CAULK - WHITE OR COLORS	33 g/L
TREMCO - TREMFLEX 834 - WHITE	22 g/L
TREMCO - TREMSIL 200 -CLEAR	1 g/L
TREMCO - TREMSTOP ACRYLIC	35 g/L

PRE-APPROVED LIST FOR LOW EMMITING MATERIALS

MANUFACTURER - PRODUCT VOC CONTENT	
ARCHITECTURAL SEALANT	**LIMIT 250 g/L**
USG - FIRECODE COMPOUND	<2 g/L
USG (US GYPSUM CO) - BEADEX ALL PURPOSE DRYWALL	<2 g/L
USG (US GYPSUM CO) - BEADEX LITE TAPING DRYWALL	<2 g/L
USG (US GYPSUM CO) - SHEETROCK ALL PURPOSES JOINT COMPOUND	0 g/L
VERSAFLEX, INC. - SL/45 PART B (HARDNER)	0 g/L
VERSAFLEX, INC. - SL/45 PART B (PRE-POLYMER)	0 g/L
W R GRACE - FLAMESAFE FS 1900 FIRESTOP	10.86 g/L
WESTPAC MATERIALS - FAST SET 20 - DRYWALL JOINT AND PATCHING COMPOUND	0 g/L
WESTPAC MATERIALS - FAST SET 40 - DRYWALL JOINT AND PATCHING COMPOUND	0 g/L
WESTPAC MATERIALS - FAST SET LITE 5 - DRYWALL JOINT AND PATCHING COMPOUND	0 g/L
WESTPAC MATERIALS - ECO SET LITE 20 - DRYWALL JOINT AND PATCHING COMPOUND	0 g/L
WESTPAC MATERIALS - ECO SET LITE 40 - DRYWALL JOINT AND PATCHING COMPOUND	0 g/L
WESTPAC MATERIALS - ECO SET LITE 90 - DRYWALL JOINT AND PATCHING COMPOUND	0 g/L
ARCHITECTURAL PAINTS/COATINGS/PRIMER - FLATS	**LIMIT 50 g/L**
C2 - L-8000 LOVO INTERIOR LATEX NON-REFLECTIVE FLAT	<50 g/L
ICI - DULUX	30 g/L
SHERWIN-WILLIAMS - HARMONY INTERIOR LATEX PRIMER	0 g/L
SHERWIN-WILLIAMS - PROMAR LATEX PRIMER	0 g/L
ARCHITECTURAL PAINTS/COATINGS/PRIMER - NON-FLATS	**LIMIT 150 g/L**
BRILLUX - PM 270	<100 g/L
BRILLUX - ACYL-FASSADENFARBE	25 g/L
BRILLUX - LF595	1 g/L
BRILLUX - PM246	<100 g/L
C2 - L1800 LOVO WALLBOARD PRIMER	<50 g/L
C2 - L8200 LOVO INTERIOR LATEX EGGSHELL	<50 g/L
C2 - L8400 LOVO INTERIOR LATEX SEMI-GLOSS	<50 g/L
ICI - DULUX ECOSURE WATER-BASED GLOSS	75 g/L
ICI - DULUX LIFEMASTER EGGSHELL INTERIOR LATEX ENAMEL	0 g/L
ICI - DULUX LIFEMASTER SEMI-GLOSS INTERIOR LATEX ENAMEL	0 g/L
SHERWIN-WILLIAMS - COLORACCENTS, EGGSHELL	126 g/L
SHERWIN-WILLIAMS - DTM ACRYLIC PRIMER	132 g/L
SHERWIN-WILLIAMS - ECOSELECT ZERO VOC EGGSHELL LATEX	0 g/L
SHERWIN-WILLIAMS - ECOSELECT ZERO VOC INTERIOR LATEX EGGSHELL	<40 g/L
SHERWIN-WILLIAMS - HARMONY INTERIOR LATEX PRIMER	0 g/L
SHERWIN-WILLIAMS - HARMONY INTERIOR SEMI-GLOSS	<50 g/L
SHERWIN-WILLIAMS - HARMONY, EGGSHELL	<50 g/L
SHERWIN-WILLIAMS - PRO INDUSTRIAL PRO-CRYL ACRYLIC PRIMER	96 g/L
SHERWIN-WILLIAMS - PROMAR200 PRIMER	91 g/L
SHERWIN-WILLIAMS - PROMAR400 LATEX EGGSHELL, EXTRA WHITE	0 g/L
SHERWIN-WILLIAMS - PROMAR400 LATEX SEMI-GLOSS, EXTRA WHITE	0 g/L
ANTICORROSIVE/ANTIRUST PAINT	**LIMIT 250 g/L**
CAFCO - SPRAYFILM WB 4	0 g/L
ICI PAINTS - DEVOE DEVFLEX 4020PF	91 g/L
SHERWIN-WILLIAMS - WATER BASED CATALYZED EPOXY	120 g/L
CLEAR WOOD FINISHES - VARNISH	**LIMIT 350 g/L**
SHERWIN-WILLIAMS - WOOD CLASSICS WATERBORNE POLYURETHANE VARNISH	311 g/L
FLOOR COATINGS	**LIMIT 100 g/L**
MAPEI - MAPECEM QUICKPATCH	0 g/L
ADVANCED FLOOR PRODUCTS - RETROPLACE 99	0 g/L

FOR CONSTRUCTION

© 2019 STARBUCKS COFFEE COMPANY

STARBUCKS®
2401 UTAH AVENUE SOUTH
SEATTLE, WASHINGTON 98134
(206) 318-1575

THESE DRAWINGS AND THE PROJECT MANUAL ARE CONFIDENTIAL AND SHALL REMAIN THE SOLE PROPERTY OF STARBUCKS CORPORATION, WHICH IS THE OWNER OF THE COPYRIGHT IN THIS WORK. THEY SHALL NOT BE REPRODUCED (IN WHOLE OR IN PART), SHARED WITH THIRD PARTIES OR USED IN ANY MANNER ON OTHER PROJECTS OR EXTENSIONS TO THIS PROJECT WITHOUT THE PRIOR WRITTEN CONSENT OF STARBUCKS CORPORATION. THESE DRAWINGS AND SPECIFICATIONS ARE INTENDED TO EXPRESS DESIGN INTENT FOR A PROTOTYPICAL STARBUCKS STORE (WHICH IS SUBJECT TO CHANGE AT ANYTIME) AND DO NOT REFLECT ACTUAL SITE CONDITIONS. NEITHER PARTY SHALL HAVE ANY OBLIGATION NOR LIABILITY TO THE OTHER (EXCEPT STATED ABOVE) UNTIL A WRITTEN AGREEMENT IS FULLY EXECUTED BY BOTH PARTIES.

STARBUCKS TEMPLATE VERSION: i2021-09-13

Design Forum Architects Inc.
2056 Byers Rd
Miamisburg, OH 45342
Tel: (844) 804-7700
Donald J. Rethman
Architect In Charge
License: AR0017303

Design Forum Engineering
2056 Byers Rd
Miamisburg, OH 45342
Tel: (844) 804-7700
Timothy L. Raberding, PE
Professional Engineer
License: 62078

PROJECT NAME:
US 98 & GRIFFIN RD

PROJECT ADDRESS:
3105 US-98 NORTH
LAKELAND, FLORIDA 33801

STORE #:	80004
PROJECT #:	96892-001
ISSUE DATE:	2025-10-10
DESIGNER:	ASHLEY SUEIRAS
PRODUCTION DESIGNER:	ANDY MCLOUD
CHECKED BY:	DONALD RETHMAN

Revision Schedule

Rev	Date	By	Description

SHEET TITLE:
PRE-APPROVED CONST. MATERIALS
SCALE: NO SCALE

SHEET NUMBER:
G-006

10/9/2025 9:53:23 AM C:\Users\julia.gray\Documents\96892-001_80004_US 98 & Griffin Rd, FL_2025_Julia.grayFRYY6.rvt

PRE-APPROVED LIST FOR LOW EMMITING MATERIALS

MANUFACTURER - PRODUCT VOC CONTENT

WATERPROOFING SEALERS	LIMIT 250 g/L
ADVANCED FLOOR PRODUCTS - RETROGUARD	100 g/L
AMERIPOLISH - PROGUARD STAIN SHIELD	<50 g/L
DEVOE - WATERBORNE EPOXY	200 g/L
H&C - CONCRETE SEALER	250 g/L
MAPEI - MAPELASTIC AQUADEFENSE	0 g/L
SCOFIELD - FORMULA ONE	0 g/L
SCOFIELD - FORMULA ONE FINISH COAT	0 g/L
SCOFIELD - FORMULA ONE GUARD-W	<100 g/L
SCOFIELD - FORUMLA ONE DYE	10.7 g/L
SCOFIELD - FORUMLA ONE LITHIUM DENSIFIER	0 g/L
SEALSOURCE - KROMAPOLISH	0 g/L

STAINS	LIMIT 250 g/L
H&C - CONCRETE STAIN	246 g/L
AMERIPOLISH - COLOR JUICE COATING	0 g/L
DALYS - WOODBORNE WOOD STAIN	<50 g/L

CARPET	
INTERFACEFLOR - GLP	CRI GREEN LABEL
INTERFACEFLOR - SOFTSISAL	CRI GREEN LABEL
LEES CARPET TILE - GROUND STRATA MODULAR	CRI GREEN LABEL
SHAW INDUSTRIES - VIBE	CRI GREEN LABEL

PRE-APPROVED LIST FOR LOW EMMITING MATERIALS

MANUFACTURER - PRODUCT VOC CONTENT

HARD SURFACE FLOORING	
NON-ORGANIC GLAZED TILE - GENERIC (ALL NON-ORGANIC, GLAZED TILE COMPLIES)	N/A
ALTRO LTD - STRONGHOLD 30	FLOORSCORE
ALTRO LTD - AQUARIUS	FLOORSCORE
ALTRO LTD - ATLAS 40	FLOORSCORE
ALTRO LTD - CONTRAX	FLOORSCORE
ALTRO LTD - DESIGNER 25	FLOORSCORE
ALTRO LTD - IMPRESSIONIST II	FLOORSCORE
ALTRO LTD - MARINE 20	FLOORSCORE
ALTRO LTD - MAXIS 25	FLOORSCORE
ALTRO LTD - MIRICA	FLOORSCORE
ALTRO LTD - SUPREMA II	FLOORSCORE
ALTRO LTD - TIMBERSAFE II	FLOORSCORE
ALTRO LTD - WALKWAY 20	FLOORSCORE
ALTRO LTD - WALKWAY 20D	FLOORSCORE
ALTRO LTD - XPRESSLAY	FLOORSCORE
CROSSVILLE INC - AMERCANO	FLOORSCORE
CROSSVILLE INC - BLUESTONE	FLOORSCORE
CROSSVILLE INC - BUILDING BLOX	FLOORSCORE
CROSSVILLE INC - CLASSIC MOSAICS	FLOORSCORE
CROSSVILLE INC - COLOR BLOX EC	FLOORSCORE
CROSSVILLE INC - COLOR BLOX MOSAICS	FLOORSCORE
CROSSVILLE INC - COLOR BLOX TOO	FLOORSCORE
CROSSVILLE INC - COTTO AMERICANA	FLOORSCORE
CROSSVILLE INC - CROSS COLORS	FLOORSCORE
CROSSVILLE INC - CROSS COLORS LP	FLOORSCORE
CROSSVILLE INC - ECOCYCLE	FLOORSCORE
CROSSVILLE INC - MAIN STREET	FLOORSCORE
CROSSVILLE INC - PALAIS	FLOORSCORE
CROSSVILLE INC - POMPEII	FLOORSCORE
CROSSVILLE INC - RETRO ACTIVE	FLOORSCORE
CROSSVILLE INC - STRUCTURE	FLOORSCORE
CROSSVILLE INC - TEXTURES	FLOORSCORE
CROSSVILLE INC - TUSCAN CLAY	FLOORSCORE
CROSSVILLE INC - ULTIMETAL	FLOORSCORE
CROSSVILLE INC - VISTA AMERICANA	FLOORSCORE
CROSSVILLE INC - WEATHERSTONE	FLOORSCORE
CROSSVILLE INC - WOOD IMPRESSIONS	FLOORSCORE

PRE-APPROVED LIST FOR LOW EMMITING MATERIALS

MANUFACTURER - PRODUCT VOC CONTENT

COMPOSITE WOOD	NO ADDED UREA-FORMALDEHYDE
ANY - APA RATED STRUCTURAL PLYWOOD (EXPOSURE 1 OR EXTERIOR)	YES
COLUMBIA FOREST PRODUCTS - EUROPLY PLUS	YES
COLUMBIA FOREST PRODUCTS - PUREBOND	YES
EGGERS INDUSTRIES - 206 5-PLY	YES
GLASTEEL - GLASLINER - FRP	YES
GRAHAM WOOD DOORS - GPD-45 5-PLY AGRIFIBER	YES
GRAHAM WOOD DOORS - GPD-AP 5-PLY AGRIFIBER	YES
GRAHAM WOOD DOORS - GPD-EC 5-PLY ENGINEERED COMPOSITE	YES
GRAHAM WOOD DOORS - GPD-SL 5-PLY STAVE LUMBER	YES
LYDEN DOORS - CD200 NAUF PARTICLEBOARD CORE	YES
LYDEN DOORS - CD250 AGFIBER CORE	YES
LYDEN DOORS - CD300 NAUF STAVE LUMBER CORE	YES
LYDEN DOORS - CD350 STRUCTURAL COMPOSITE CORE	YES
MARSHFIELD - ENVIRONMENTAL CLASS	YES
NAUF - COMPOSITE WOOD DOOR	YES
ROSEBURG - COMPOSITE WOOD PANTLS	YES
SIERRA PINE - ARREIS	YES
SIERRA PINE - MEDEX	YES
SIERRA PINE - MEDITE FR	YES
SIERRA PINE - MEDITE II	YES
SIERRA PINE - PERMACORE	YES

GYPSUM BOARD	
AMERICAN GYPSUM - FIREBLOCK	GREENGUARD GOLD
GEORGIA PACIFIC - TOUGHROCK FIREGUARD	GREENGUARD GOLD
LAFARGE - FIRECHECK	GREENGUARD GOLD
NATIONAL GYPSUM - GOLD BOND FIRESHIELD	GREENGUARD GOLD
CERTAINTEED - PROROC TYPE X	CHPS
USG - SHEETROCK FIRECODE	CHPS
GEORGIAPACIFIC - TOUGHROCK GYPSUM BOARD	GREENGUARD GOLD
SMDS - DENSARMOR PLUS	GREENGUARD GOLD

ACOUSTICAL CEILING SYSTEM	
ARMSTRONG - CERAMAGUARD	CHPS
ARMSTRONG - FINE FISSURED	CHPS
ARMSTRONG - CLEANROOM VL	CHPS
ARMSTRONG - CORTEGA	CDPH/EHLB
ARMSTRONG - CLEANROOM	CDPH/EHLB
CRANE - SEQUENTIA LAMINATED PANELS	GREENGUARD
ARMSTRONG - METALWORKS	CHPS
USG- RADAR	CHPS/CDPH/EHLB
USG - SHEETROCK	CA/DHS/EHLB

WALL COVERINGS	
CERTAINTEED - DIAMONDBACK TILE BACKER	GREENGUARD GOLD
COLUMBIA FOREST PRODUCTS - EUROPLY PLUS	NAUF
COLUMBIA FOREST PRODUCTS - PUREBOND	NAUF
CRANE COMPOSITES - GLASBORD FRP	GREENGUARD GOLD
DAL-TILE - CERAMIC WALL TILE	CHPS
GEORGIA PACIFIC - DENSSHIELD TILE BACKER BOARD	CHPS
GLASTEEL - GLASLINER FRP	GREENGUARD GOLD
MARLITE - FRP	GREENGUARD
NATIONAL GYPSUM - E2XP TILE BACKER	GREENGUARD GOLD
OMNOVA - ECORE	GREENGUARD GOLD
PANOLAM INDUSTRIES - PANOLAM FRP	GREENGUARD GOLD
PARKLAND PLASTICS - PLASTEX NRP	GREENGUARD GOLD
SEQUENTIA - EMBOSSED TEXTURE	GREENGUARD

FOR CONSTRUCTION

© 2019 STARBUCKS COFFEE COMPANY

STARBUCKS®
2401 UTAH AVENUE SOUTH
SEATTLE, WASHINGTON 98134
(206) 318-1575

THESE DRAWINGS AND THE PROJECT MANUAL ARE CONFIDENTIAL AND SHALL REMAIN THE SOLE PROPERTY OF STARBUCKS CORPORATION, WHICH IS THE OWNER OF THE COPYRIGHT IN THIS WORK. THEY SHALL NOT BE REPRODUCED (IN WHOLE OR IN PART), SHARED WITH THIRD PARTIES OR USED IN ANY MANNER ON OTHER PROJECTS OR EXTENSIONS TO THIS PROJECT WITHOUT THE PRIOR WRITTEN CONSENT OF STARBUCKS CORPORATION. THESE DRAWINGS AND SPECIFICATIONS ARE INTENDED TO EXPRESS DESIGN INTENT FOR A PROTOTYPICAL STARBUCKS STORE (WHICH IS SUBJECT TO CHANGE AT ANYTIME) AND DO NOT REFLECT ACTUAL SITE CONDITIONS. NEITHER PARTY SHALL HAVE ANY OBLIGATION NOR LIABILITY TO THE OTHER (EXCEPT STATED ABOVE) UNTIL A WRITTEN AGREEMENT IS FULLY EXECUTED BY BOTH PARTIES.

STARBUCKS TEMPLATE VERSION: i2021-09-13

Design Forum Architects Inc.
2056 Byers Rd
Miamisburg, OH 45342
Tel: (844) 804-7700
Donald J. Rethman
Architect In Charge
License: AR0017303

Design Forum Engineering
2056 Byers Rd
Miamisburg, OH 45342
Tel: (844) 804-7700
Timothy L. Raberding, PE
Professional Engineer
License: 62078

PROJECT NAME:
US 98 & GRIFFIN RD

PROJECT ADDRESS:
3105 US-98 NORTH
LAKELAND, FLORIDA 33801

STORE #:	80004
PROJECT #:	96892-001
ISSUE DATE:	2025-10-10
DESIGNER:	ASHLEY SUEIRAS
PRODUCTION DESIGNER:	ANDY MCLOUD
CHECKED BY:	DONALD RETHMAN

Revision Schedule

Rev	Date	By	Description

SHEET TITLE:
PRE-APPROVED CONST. MATERIALS
SCALE: NO SCALE

SHEET NUMBER:
G-007

10/9/2025 9:53:23 AM C:\Users\julia.gray\Documents\96892-001_80004_US 98 & Griffin Rd, FL_2025_Julia.grayFRYY6.rvt

WALL CONSTRUCTION SCHEDULE

WALL LABELING KEY: INTERIOR SHEATHING → WALL STUD → Xx | X | xx ← INTERIOR MODIFIER

WALL STUD	
2a	1 5/8" 20 GA STUDS AT 16" O.C. (FULL HEIGHT).
2b	1 5/8" 20 GA STUDS AT 16" O.C. (TERMINATE 6" ABOVE CEILING). PROVIDE 45 DEGREE METAL STUD BRACING AT 48" O.C. FROM TOP OF STUD WALL TO STRUCTURE ABOVE.
4a	3 5/8" 20 GA STUDS AT 16" O.C. (FULL HEIGHT).
4b	3 5/8" 20 GA STUDS AT 16" O.C. (TERMINATE 6" ABOVE CEILING). PROVIDE 45 DEGREE METAL STUD BRACING AT 48" O.C. FROM TOP OF STUD WALL TO STRUCTURE ABOVE.
4c	3 5/8" 16 GA STUDS AT 16" O.C. (PARTIAL HEIGHT). DRYWALL SCREWS AT 12" O.C.
6a	6" 20 GA STUDS AT 16" O.C. (FULL HEIGHT)
6b	6" 20 GA STUDS AT 16" O.C. (TERMINATE 6" ABOVE CEILING). PROVIDE 45 DEGREE METAL STUD BRACING AT 48" O.C. FROM STUD WALL TO STRUCTURE ABOVE.
INTERIOR SHEATHING	
A	ONE SIDE 5/8" MOISTURE RESISTANT GYP. BOARD (UNDERSIDE OF GYPSUM BOARD CEILING)
B	BOTH SIDES 5/8" MOISTURE RESISTANT GYP. BOARD (ONE SIDE UNDERSIDE OF GYPSUM BOARD CEILING AND OTHER SIDE TERMINATE 6" ABOVE ACT CEILING)
C	ONE SIDE 5/8" PLYWOOD SUBSTRATE BOARD AND 5/8" MOISTURE RESISTANT GYP. BOARD ON OTHER SIDE (BOTH SIDES UNDERSIDE OF GYPSUM BOARD CEILING)
D	BOTH SIDES 5/8" MOISTURE RESISTANT GYP. BOARD (ONE SIDE UNDERSIDE OF GYPSUM BOARD CEILING AND OTHER SIDE UP TO STRUCTURE)
E	ONE SIDE 5/8" PLYWOOD SUBSTRATE BOARD (UNDERSIDE OF GYPSUM BOARD CEILING)
F	ONE SIDE 5/8" TYPE "X" GYP. BOARD (UNDERSIDE OF GYPSUM BOARD CEILING)
G	ONE SIDE 5/8" MOISTURE RESISTANT GYP. BOARD AND OTHER SIDE 5/8" TYPE "X" GYP. BOARD (BOTH SIDES UNDERSIDE OF GYPSUM BOARD CEILING)
H	BOTH SIDES 5/8" MOISTURE RESISTANT GYP. BOARD (UP TO 4' - 0" AFF)
I	BOTH SIDES 5/8" MOISTURE RESISTANT GYP. BOARD (ONE SIDE TERMINATE 6" ABOVE ACT CEILING AND OTHER SIDE UP TO STRUCTURE)
J	BOTH SIDES 5/8" MOISTURE RESISTANT GYP. BOARD (BOTH SIDES TERMINATE 6" ABOVE ACT CEILING)
INTERIOR MODIFIERS	
ai	ACOUSTIC INSULATION (FULL HEIGHT)
48	PARTIAL HEIGHT WALL 48" AFF. 16 GA METAL STUDS AT 16" O.C. W/ RCKW RIGID CONNECTORS AT FLOOR. (MODIFIER = HEIGHT IN INCHES A.F.F.).

LEGEND

- NEW FULL HEIGHT WALL
- NEW PARTIAL HEIGHT WALL
- EXISTING WALL
- WALL BLOCKING CALL OUT (XX)
- EXISTING COLUMN

WALL BLOCKING KEY

SYMBOL	ITEM	WEIGHT	HEIGHT A.F.F.	APPROX. WIDTH
A	WORKROOM HAND SINK	128 LBS (58 KG)	36" TO 40" (915MM TO 1015MM)	30" (760MM) BEHIND SINK
B	SHELVES ABOVE COMPARTMENT SINK	200 LBS (91 KG)	48" TO 76" (1220MM TO 1930MM)	96" (2440MM) CENTERED ABOVE COMPARTMENT SINK
C	RESTROOM GRAB BARS	200 LBS (91 KG)	30" TO 36" (760MM TO 915MM)	60" (1525MM) AROUND WATER CLOSET
D	SHELVES AT MANAGER'S DESK	300 LBS (136 KG)	32" TO 96" (810MM TO 2440MM)	48" (1220MM) 3/4 (19MM) ACX PLYWOOD, CENTERED ON SHELVES
E	EQUIPMENT RACK AT MANAGER'S DESK	300 LBS (136 KG)	44" TO 96" (1120MM TO 2440MM)	28" (710MM) 3/4 (19MM) ACX PLYWOOD, CENTERED ON RACK
F	WATER FILTRATION SYSTEM	TBD BY VENDOR	COORDINATE LOCATION AND EXTENT WITH PENTAIR	
G	RESTROOM HAND SINK	200 LBS (91 KG)	COMMERCIAL INSTALLATION REQUIRES CONCEALED ARM CARRIER. REFER TO MFR'S SPECIFICATION.	
H	CBE TEA SHELF AND DRY SHELF/ WOOD SHELF	BLOCKING SPECIFICATION FOR CBE METAL SHELVES. REFER TO VENDOR'S SPECIFICATION AND DETAILS.		
I	5-COMP LOCKERS	200LBS	0" TO 66" (0MM TO 1676MM)	SEE PLAN
J	MILLWORK BOXES	BLOCKING SPECIFICATION FOR FRENCH CLEATING SYSTEM. REFER TO DETAILS.		
K	MENU BOARDS / HARDWARE	300 LBS (136 KG)	72" TO 112" (1829MM TO 2845MM)	EXTENT OF BACKBAR UPPER CASEWORK
L	DIAPER CHANGING STATION	250 LBS (113 KG)	40 1/2" TO 46 1/2" (1030MM TO 1180MM)	32" (810MM) BEHIND STATION
M	RESTROOM HAND DRYER	200LBS	36" TO 48" (915MM TO 1219MM)	24" STARTING 18" FROM WALL CORNER/SEE PLAN
N	ALL ARTWORK, FIXTURES, ACCESSORIES AND CASEWORK FABRICATIONS NOT OTHERWISE NOTED	TBD BY VENDOR (VARIES)	GC TO PROVIDE WALL BLOCKING AS REQUIRED FOR ALL ITEMS FOR A COMPLETE AND SECURE INSTALLATION. EXTEND BLOCKING 8" (205MM) BEYOND ON EACH SIDE OF EACH ITEM.	
O	ADAPTABLE CASEWORK	TBD BY VENDOR (VARIES)	BLOCKING SPECIFICATION FOR ADAPTABLE CASEWORK. REFER TO VENDOR'S SPECIFICATION AND DETAILS.	
P	MERCH BAY	TBD BY VENDOR (VARIES)	BLOCKING SPECIFICATION FOR ADAPTABLE CASEWORK. REFER TO VENDOR'S SPECIFICATION AND DETAILS.	
Q	ICE MACHINE AND DIVERTER	TBD BY VENDOR (VARIES)	BLOCKING SPECIFICATION FOR ADAPTABLE CASEWORK. REFER TO VENDOR'S SPECIFICATION AND DETAILS.	

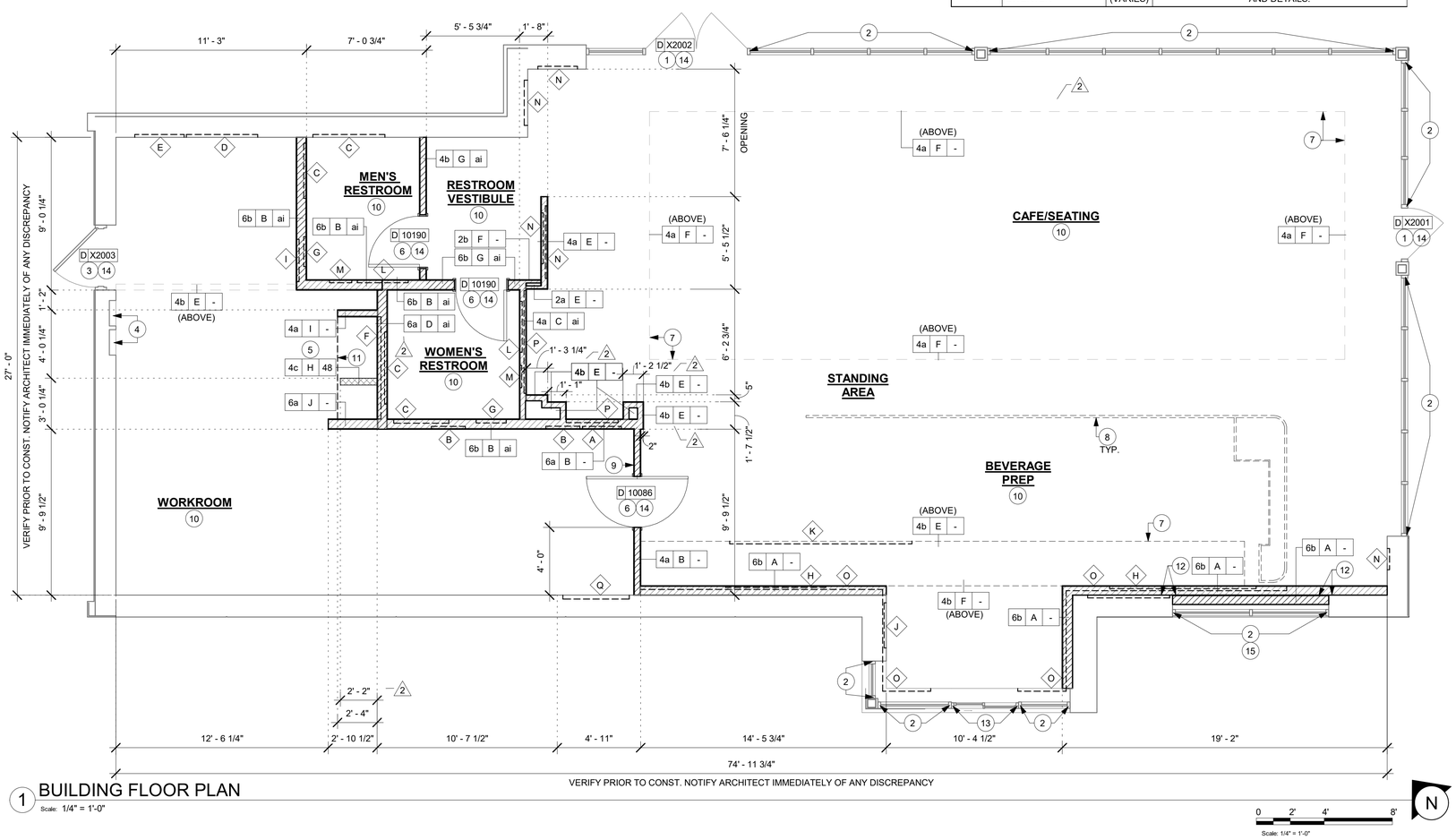

1 BUILDING FLOOR PLAN
Scale: 1/4" = 1'-0"

GENERAL NOTES

A. GENERAL CONTRACTOR TO VERIFY ALL DIMENSIONS AND NOTIFY STARBUCKS CONSTRUCTION MANAGER OF ANY DISCREPANCIES PRIOR TO CONSTRUCTION. ALL DIMENSIONS TO BE TAKEN FROM DESIGNATED DATUM POINT.

B. GENERAL CONTRACTOR TO PROVIDE FIRE TREATED WOOD STUD BLOCKING, OR EQUIVALENT TO SUPPORT ANY WALL ATTACHMENT AND/OR SIGNAGE.

C. IF EXISTING EXTERIOR ENTRANCE THRESHOLD EXCEEDS MINIMUM BARRIER FREE PROVISION OF THE CODE, REMOVE AND REPLACE WITH ACCESSIBLE THRESHOLD. RAISED THRESHOLDS AND FLOOR LEVEL CHANGES AT ACCESSIBLE DOORWAYS TO BE BEVELED WITH A SLOPE NO GREATER THAN 1:12.

D. ALL DIMENSIONS ARE TO FINISHED FACE UNLESS SHOWN OR NOTED OTHERWISE.

E. INSTALL MOISTURE RESISTANT GREEN BOARD ON BACKBAR WALL PER PROJECT MANUAL.

F. ALL DOORS SHALL BE 32" (815MM) MINIMUM CLEAR OPENING WHEN OPENED TO 90 DEGREE POSITION UNLESS OTHERWISE NOTED.

G. SEE SHEET A601 FOR EXTERIOR DOOR AND WINDOW SCHEDULES.

H. STARBUCKS VENDOR TO PROVIDE DOOR HARDWARE COMPONENTS AND GC TO INSTALL.

I. VERIFY ALL EXISTING DOORS, HARDWARE AND FRAMES MEET STARBUCKS AND/OR CODE REQUIREMENTS.

J. PROVIDE FIRE EXTINGUISHERS AS NOTED ON THE APPROVED PLANS FROM THE CITY.

K. SEE SHEET A-501 FOR BUILDING DETAILS.

L. REFER TO SHEET I-106 FOR FLOOR FINISHES.

KEYED NOTES

1. EXISTING STOREFRONT DOOR. GC TO ENSURE IN PROPER WORKING ORDER AND REPAIR AS NECESSARY. REPLACE HARDWARE AS REQUIRED.
2. EXISTING STOREFRONT WINDOW SYSTEM. GC TO CLEAN TO "LIKE NEW" CONDITION AND REPAIR AS NECESSARY.
3. EXISTING 42IN SERVICE DOOR. GC TO ENSURE IN PROPER WORKING ORDER AND REPAIR AS NECESSARY. REPLACE HARDWARE AS REQUIRED.
4. RECESSED ELECTRICAL PANEL. GC CONFIRM WITH WL AS INDICATED. MAINTAIN MINIMUM CLEARANCES AS REQUIRED BY CODE. REFER TO ELECTRICAL DRAWINGS.
5. CONSTRUCT NEW 4' - 0" HIGH PARTIAL-HEIGHT WALL AS INDICATED. PROVIDE KNEE BRACE KIT #SKB AS MANUFACTURED BY PITTCON INDUSTRIES @ 4' - 0" O.C. MAXIMUM FINISH ALL EXPOSED EDGES.
6. INSTALL NEW DOORS AS INDICATED. SEE SHEET A-601 FOR DOOR AND HARDWARE TYPE.
7. OUTLINE OF SOFFIT ABOVE.
8. OUTLINE OF BAR PER CASEWORK MANUFACTURER.
9. FIRE EXTINGUISHER LOCATION.
10. 4IN THICK CONCRETE SLAB ON GROUND (F'C = 3000 PSI) W/ 6X6 WI.4 X WI.4 ON 10 MIL VAPOR BARRIER ON TERMITE TREATED COMPACTED SUBGRADE.
11. SHELF FOR WATER HEATER ABOVE.
12. ALIGN FACE OF FINISHED WALL.
13. EXISTING DT WINDOW.
14. REFER TO SHEET A-601 FOR DOOR AND HARDWARE TYPE.
15. INSTALL BLACKOUT FILM ON EXTERIOR FACE OF GLAZING. REFER TO SHEET I-101.1 FOR GRAPHICS SCHEDULE.

NOTE:

SEE SHEET A-501, A-502 & A-503 FOR WALL CONSTRUCTION DETAILS.

FOR CONSTRUCTION

© 2019 STARBUCKS COFFEE COMPANY

STARBUCKS®
2401 UTAH AVENUE SOUTH
SEATTLE, WASHINGTON 98134
(206) 318-1575

THESE DRAWINGS AND THE PROJECT MANUAL ARE CONFIDENTIAL AND SHALL REMAIN THE SOLE PROPERTY OF STARBUCKS CORPORATION, WHICH IS THE OWNER OF THE COPYRIGHT IN THIS WORK. THEY SHALL NOT BE REPRODUCED (IN WHOLE OR IN PART), SHARED WITH THIRD PARTIES OR USED IN ANY MANNER ON OTHER PROJECTS OR EXTENSIONS TO THIS PROJECT WITHOUT THE PRIOR WRITTEN CONSENT OF STARBUCKS CORPORATION. THESE DRAWINGS AND SPECIFICATIONS ARE INTENDED TO EXPRESS DESIGN INTENT FOR A PROTOTYPICAL STARBUCKS STORE (WHICH IS SUBJECT TO CHANGE AT ANYTIME) AND DO NOT REFLECT ACTUAL SITE CONDITIONS. NEITHER PARTY SHALL HAVE ANY OBLIGATION NOR LIABILITY TO THE OTHER (EXCEPT STATED ABOVE) UNTIL A WRITTEN AGREEMENT IS FULLY EXECUTED BY BOTH PARTIES.

STARBUCKS TEMPLATE VERSION: i2021-09-13

Design Forum Architects Inc.
2056 Byers Rd
Miamisburg, OH 45342
Tel: (844) 804-7700
Donald J. Rethman
Architect In Charge
License: AR0017303

Design Forum Engineering
2056 Byers Rd
Miamisburg, OH 45342
Tel: (844) 804-7700
Timothy L. Raberding, PE
Professional Engineer
License: 62078

PROJECT NAME:
US 98 & GRIFFIN RD

PROJECT ADDRESS:
3105 US-98 NORTH
LAKELAND, FLORIDA 33801

STORE #:	80004
PROJECT #:	96892-001
ISSUE DATE:	2025-10-10
DESIGNER:	ASHLEY SUEIRAS
PRODUCTION DESIGNER:	ANDY MCLOUD
CHECKED BY:	DONALD RETHMAN

Revision Schedule

Rev	Date	By	Description
2	08/26/25		REV-2

SHEET TITLE:
BUILDING FLOOR PLAN

SCALE: 1/4" = 1'-0"

SHEET NUMBER:
A-101

10/9/2025 9:53:25 AM C:\Users\julia.gray\Documents\96892-001_80004_US 98 & Griffin Rd, FL_2025_Julia.grayFRYY6.rvt

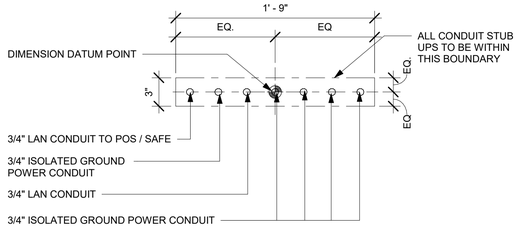

2 STUB UPS - FRONTBAR

Scale: 1 1/2" = 1'-0"

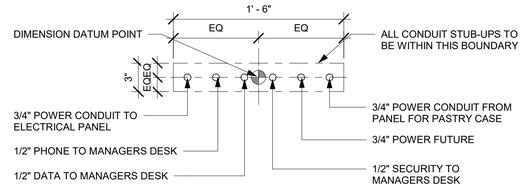

3 STUB UPS - DOUBLE POS/SAFE

Scale: 1 1/2" = 1'-0"

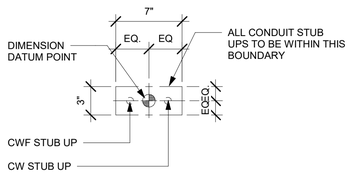

4 STUB UPS - ESPRESSO

Scale: 1 1/2" = 1'-0"

KEYED NOTES

A. ALL STUB-UP DIMENSIONS ARE RELATIVE TO FINISHED WALL LOCATIONS (SHOWN AS OUTLINES ON THIS PLAN). REFER TO FLOOR PLAN FOR WALL PLACEMENT.

B. FLOOR SINK/ DRAIN: REFER TO CUT SHEETS FOR COMPONENT SPECIFICATIONS AND CUTOUT REQUIREMENTS.

C. WASTE LINE PENETRATIONS: REFER TO PLUMBING PLANS FOR INDIVIDUAL LINE LOCATIONS.

D. STUB-UP PENETRATIONS: REFER TO ELECTRICAL AND PLUMBING PLANS FOR INDIVIDUAL STUB-UP LOCATIONS.

E. TOILET FLOOR PENETRATION: REFER TO CUT SHEETS FOR STUB-UP LOCATION RELATIVE TO FINISHED WALL.

F. FLOOR PENETRATIONS AT MOP SINK: REFER TO PLUMBING PLANS FOR INDIVIDUAL LINE SPECIFICATION.

G. PENETRATION TO BE LOCATED ON CENTERLINE OF WALL OR AS REQUIRED PER CONDITIONS.

H. EXISTING HOSE BIB.

J. LOCATION OF POWER AND DATA OUTLETS BEHIND MENU BOARDS. CENTER OUTLETS BEHIND MENU BOARDS. REFER TO DETAIL 2/I-510 FOR MORE INFORMATION.

K. DUPLEX FLOOR OUTLET. COORDINATE FLOOR RECEPTACLES LOCATION WITH TABLE LEG.

L. REFER TO SHEET I-106 FOR FLOOR FINISHES.

M. ALL OULETS IN THE CAFE SHOULD HAVE BLACK RECEPTACLES AND COVER PLATES. ALL OUTLETS IN THE WORKROOM SHOULD HAVE WHITE RECEPTACLES AND COVER PLATES.

N. LOCATION OF RADIANT 15A TAMPER RESISTANT ULTRA - FAST USB TYPE A/C OUTLET, WHITE AT 18 IN AFF. COORDINATE LOCATIONS WITH STARBUCKS CM. REFER TO ELECTRICAL SHEETS FOR MORE INFORMATION.

O. LOCATION OF GFCI OUTLET. 2

P. LOCATION OF POWER STRIP ALONG BASE OF STORE FRONT - BLACK FINISH WITH BLACK PLUGS. 12' - 0" LONG PLUGMOLD. CONDUIT TO EXTEND UP THE COLUMN WITH CONDUIT COVER. CONDUIT COVER TO BE BLACK.

LEGEND

- FLOOR SINK
- FLOOR PENETRATION
- ELECTRICAL PENETRATION AREA
- DATUM POINT
- DRAIN FLOOR SINK (RESTROOMS)
- DATA OUTLET
- WALL OUTLET
- FLOOR OUTLET

NOTE: SEE SHEET I-101.1 FOR PLUMBING FIXTURE SCHEDULE

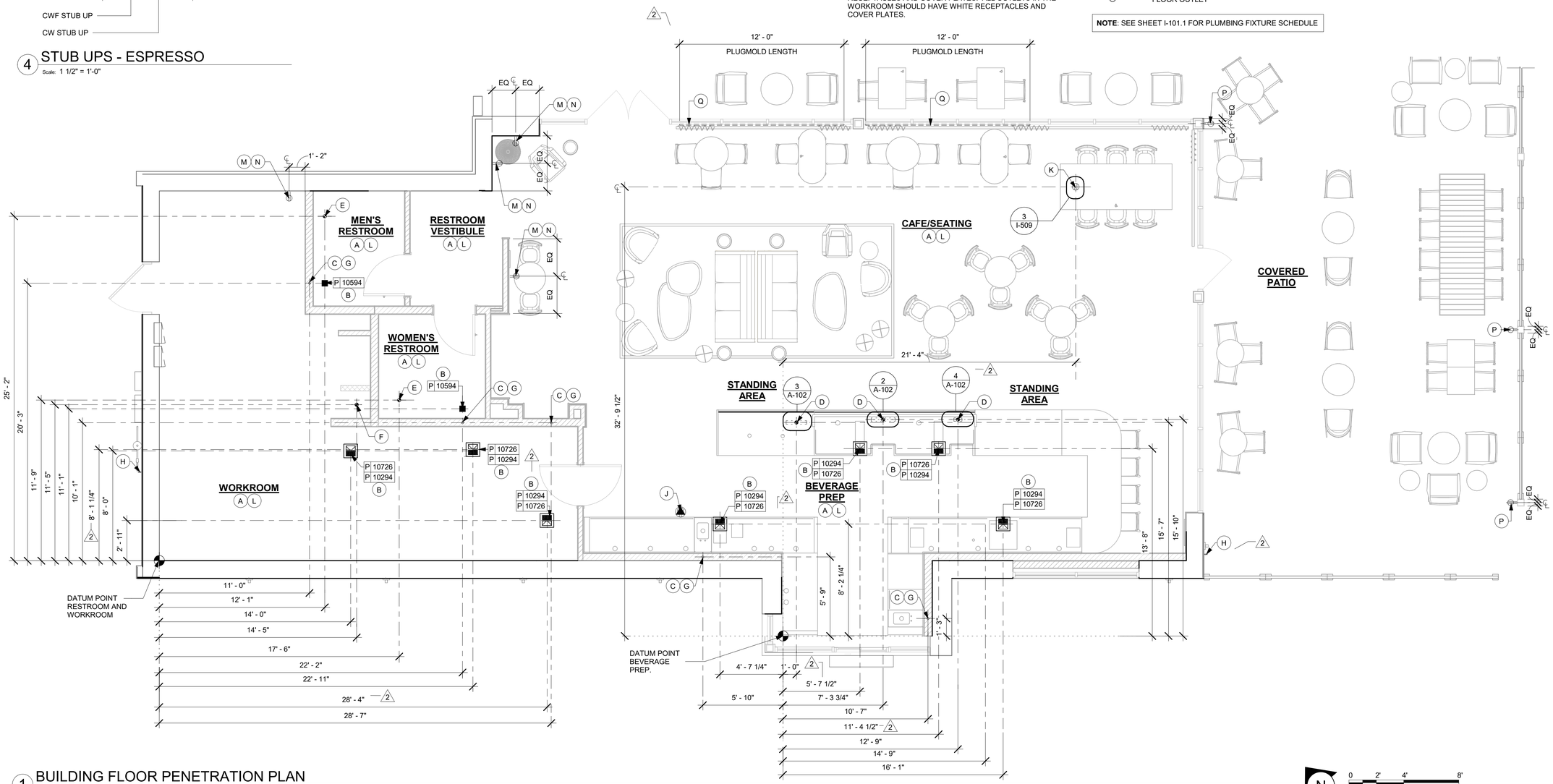

1 BUILDING FLOOR PENETRATION PLAN

Scale: 1/4" = 1'-0"

FOR CONSTRUCTION

© 2019 STARBUCKS COFFEE COMPANY

STARBUCKS®
2401 UTAH AVENUE SOUTH
SEATTLE, WASHINGTON 98134
(206) 318-1575

THESE DRAWINGS AND THE PROJECT MANUAL ARE CONFIDENTIAL AND SHALL REMAIN THE SOLE PROPERTY OF STARBUCKS CORPORATION, WHICH IS THE OWNER OF THE COPYRIGHT IN THIS WORK. THEY SHALL NOT BE REPRODUCED (IN WHOLE OR IN PART), SHARED WITH THIRD PARTIES OR USED IN ANY MANNER ON OTHER PROJECTS OR EXTENSIONS TO THIS PROJECT WITHOUT THE PRIOR WRITTEN CONSENT OF STARBUCKS CORPORATION. THESE DRAWINGS AND SPECIFICATIONS ARE INTENDED TO EXPRESS DESIGN INTENT FOR A PROTOTYPICAL STARBUCKS STORE (WHICH IS SUBJECT TO CHANGE AT ANYTIME) AND DO NOT REFLECT ACTUAL SITE CONDITIONS. NEITHER PARTY SHALL HAVE ANY OBLIGATION NOR LIABILITY TO THE OTHER (EXCEPT STATED ABOVE) UNTIL A WRITTEN AGREEMENT IS FULLY EXECUTED BY BOTH PARTIES.

STARBUCKS TEMPLATE VERSION: i2021-09-13

Design Forum Architects Inc.
2056 Byers Rd
Miamisburg, OH 45342
Tel: (844) 804-7700
Donald J. Rethman
Architect In Charge
License: AR0017303

Design Forum Engineering
2056 Byers Rd
Miamisburg, OH 45342
Tel: (844) 804-7700
Timothy L. Raberding, PE
Professional Engineer
License: 62078

PROJECT NAME:
US 98 & GRIFFIN RD

PROJECT ADDRESS:
3105 US-98 NORTH
LAKELAND, FLORIDA 33801

STORE #:	80004
PROJECT #:	96892-001
ISSUE DATE:	2025-10-10
DESIGNER:	ASHLEY SUEIRAS
PRODUCTION DESIGNER:	ANDY MCLOUD
CHECKED BY:	DONALD RETHMAN

Revision Schedule

Rev	Date	By	Description
2	08/26/25		REV-2

SHEET TITLE:
BUILDING FLOOR PENETRATION PLAN
SCALE: 1/4" = 1'-0"

SHEET NUMBER:
A-102

10/9/2025 9:53:28 AM C:\Users\julia.gray\Documents\96892-001_80004_US 98 & Griffin Rd, FL_2025_Julia.grayFRYY6.rvt

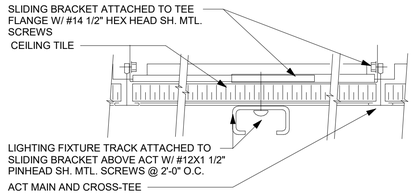

3 TRACK LIGHT - ACT MOUNT

Scale: 6" = 1'-0"

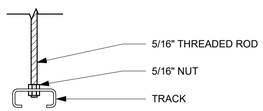

SECTION

2 TRACK LIGHTING - SUSPENDED MOUNT

Scale: 3" = 1'-0"

LEGEND

- ELEVATION DATUM
- TRACK LIGHTING
- STRIP LIGHTING
- RECESSED CAN LIGHT
- TROFFER
- EXIT SECURITY LIGHT
- MUSIC SYSTEM SPEAKER
- MUSIC SYSTEM RECESSED SPEAKER
- WIFI ACCESS POINT (WAP)
- SECURITY CAMERA
- PIR MOTION SENSOR
- LINEAR DIFFUSER
- PENDANT LIGHT
- CEILING FAN
- RR SCONCE
- SUPPLY AIR DEVICES
- RETURN / EXHAUST AIR DEVICES
- FLOOR LAMP

GENERAL NOTES

A. IF REQUIRED BY LOCAL CODE, GENERAL CONTRACTOR TO PROVIDE SEMI-RECESSED SPRINKLER HEADS WITH POLISHED CHROME ESCUTCHEONS CENTERED IN ACOUSTICAL CEILING TILE. IF PENDANT HEADS ARE REQUIRED IN GWB SOFFIT OVER FRONTBAR, CONCEAL SUPPLY PIPING WITHIN SOFFIT. GENERAL CONTRACTOR TO SUBMIT SPRINKLER LAYOUT TO STARBUCKS' CONSTRUCTION MANAGER FOR APPROVAL PRIOR TO INSTALLATION.

B. LEAVE TEN (10) ADDITIONAL RETAIL CEILING TILES TO MATCH RETAIL CEILING PAINT COLOR ABOVE THE WORKROOM CEILING AT MANAGER'S DESK FOR FUTURE USE.

C. PROVIDE GROMMET AT ACOUSTIC CEILING PENETRATIONS FOR FIXTURES OF SUPPORTS.

D. HEATING, VENTILATING AND AIR CONDITIONING SHOWN ON THIS PLAN PROVIDED FOR REFERENCE ONLY. SEE MECHANICAL DRAWINGS FOR ADDITIONAL INFORMATION.

E. DIFFUSERS AND RETURNS IN ACOUSTICAL CEILING TILE TO BE CENTERED IN TILE AND PAINTED TO MATCH ADJACENT FINISHES (TYP.).

F. PAINT ALL EXPOSED HVAC DUCTS, HVAC DIFFUSERS, LIGHT TRIM RINGS, PIPING, CONDUIT AND JUNCTION BOXES THE SAME COLOR AS SPECIFIED ON SURROUNDING CEILING OR SOFFIT UNLESS OTHERWISE NOTED. TYPICAL THROUGHOUT RETAIL AREA OF STORE.

G. PAINT SUBSTITUTIONS ARE NOT ALLOWED. USE STARBUCKS' NATIONAL ACCOUNT "COLOR CODE" WHEN ORDERING PAINTS.

H. PROVIDE CEILING ACCESS PANELS IF REQUIRED BY INSPECTOR. GC TO PROVIDE WB GY 3000 SERIES ACCESS PANEL 24 X 24, OR APPROVED EQUAL.

NOTE:
REFER TO SHEET I-101.1 FOR FURNITURE AND DATA DEVICE SCHEDULES.

KEYED NOTES

1. INSTALL GYP. CEILING / SOFFIT WITH SMOOTH FINISH (PAINT AS SCHEDULED).
2. INSTALL 2' X 4' CIRRUS SECOND LOOK ACT LOCATED IN MANAGER AND PARTNER'S AREA AS INDICATED (PAINT AS SCHEDULED).
3. NOT USED.
4. INSTALL 2' X 4' WASHABLE CEILING TILE LOCATED IN WORKROOM AS INDICATED.
5. GYP. COVE WITH SMOOTH FINISH (PAINT AS SCHEDULED).
6. PAINT RECESSED LIGHTING TRIM TO MATCH CEILING AS CLOSELY AS POSSIBLE.
7. LINE OF SOFFIT / HEADER / BULKHEAD.
8. ALIGN FINISHED SURFACES.
9. LOCATIONS OF ALL EGRESS LIGHTING FOR REFERENCE ONLY. GC TO VERIFY WITH LOCAL FIRE MARSHAL PRIOR TO INSTALLATION.
10. REFER TO INTERIOR FINISH ELEVATIONS FOR MENU BOARD SPACING.
11. REFER TO SHEET A-105 FOR LIGHTING LOCATIONS AND INFORMATION.
12. INSTALL EXTERIOR SPEAKER AT 9' - 6" (2895MM) A.F.F. MIN.
13. INSTALL SUSPENDED SPEAKERS AT CAFE AS INDICATED.
14. PLATFORM FOR HEATER AND WATER FILTRATION. PROVIDE SOFFIT AND LIFT CEILING THIS AREA ONLY TO ENSURE ADEQUATE CLEARANCE FOR SERVICING. ADJACENT CEILING COLOR.
15. LINE OF PASTRY CASE BELOW.
16. LOCATION OF ALL SWITCHING.
17. INSTALL SECURITY CAMERA AS INDICATED.
18. WIRELESS ACCESS POINT: LOCATE (2) PER STORE, ONE ABOVE POS, ONE NEAR MANAGER'S WORKSTATION.
19. PIR MOTION DETECTOR: MOTION DETECTORS ARE REQUIRED IN THE FOLLOWING LOCATIONS:
(CENTRALLY LOCATE IN ZONES LISTED BELOW)
A. BEHIND BAR NEAR POINT OF SALE
B. CENTRALLY LOCATED IN CAFE
C. AT MANAGER'S WORKSTATION
D. CENTRALLY LOCATED IN BACK OF HOUSE
20. INSTALL NEW CANOPY RECESSED CAN LIGHTS BY LL.
21. EXTERIOR BUILDING SIGNAGE. SEE BUILDING EXTERIOR ELEVATIONS FOR ADDITIONAL INFORMATION.
22. EXISTING EXTERIOR WALL SCONCES.
23. EXISTING AWNING / CANOPY.
24. INSTALL EXTERIOR CEILING FANS BY SB.
25. INSTALL ROLLER SHADES AS INDICATED.
26. NOT USED.
27. INSTALL LINEAR DIFFUSERS / SQUARE DIFFUSER AS INDICATED.
28. INSTALL NEW EM / EXIT DISCHARGE LIGHT AS INDICATED.
29. NOT USED.
30. INSTALL ACOUSTIC ZINTRA BAFFLES AS INDICATED.
31. INSTALL 2' X 2' ACT CEILING LOCATED IN DT AREA AS INDICATED.
32. NOT USED..
33. PAINT ALL EXPOSED ROOF DECK AND DUCT ABOVE BAFFLES.
34. PROVIDE 4-SQUARE J-BOX FOR FRONT OF HOUSE STROBE . SEE ELECTRICAL DRAWINGS FOR LOCATION.

LIGHTING LEGEND

CUSTOM CAN - LED WALL WASH - 3IN 75MM - BLACK - 1000LM	L	21771
CAN - LED ADJUSTABLE RECESSED - 3IN 75MM - WHITE - 700LM WF	L	21774
TRACK - LED FIXTURE WITH SNOOT - 3IN 75MM - BLACK - 1100LM SPOT	L	21777
CUSTOM CAN - RECESSED CAN LIGHT	L	X7001
STRIP - LED TAPE IN HOUSING - VARIABLE LENGTH - BLACK - 350LM PER FT	L	22215

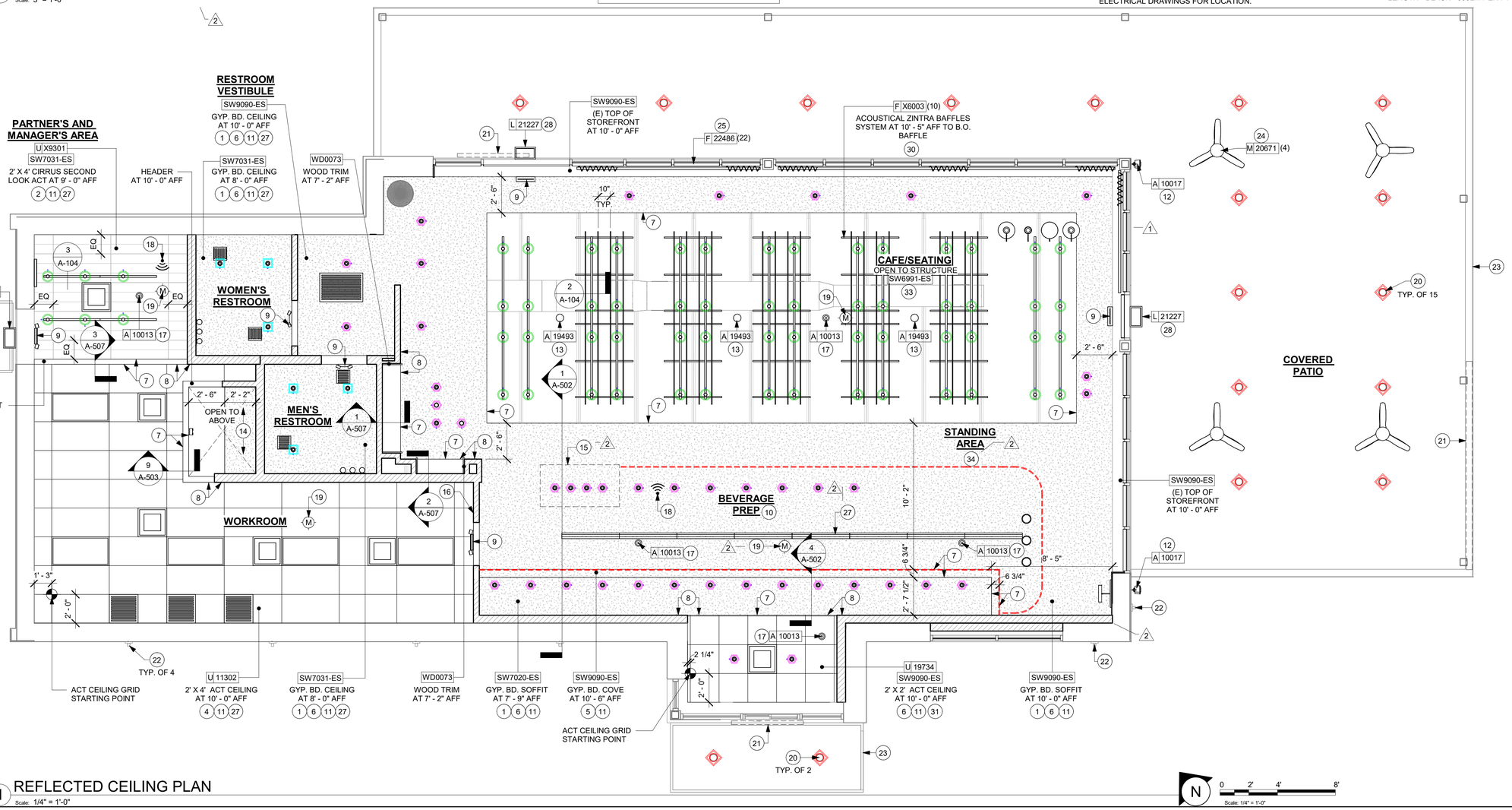

1 REFLECTED CEILING PLAN

Scale: 1/4" = 1'-0"

FOR CONSTRUCTION

© 2019 STARBUCKS COFFEE COMPANY

STARBUCKS®
2401 UTAH AVENUE SOUTH
SEATTLE, WASHINGTON 98134
(206) 318-1575

THESE DRAWINGS AND THE PROJECT MANUAL ARE CONFIDENTIAL AND SHALL REMAIN THE SOLE PROPERTY OF STARBUCKS CORPORATION, WHICH IS THE OWNER OF THE COPYRIGHT IN THIS WORK. THEY SHALL NOT BE REPRODUCED (IN WHOLE OR IN PART), SHARED WITH THIRD PARTIES OR USED IN ANY MANNER ON OTHER PROJECTS OR EXTENSIONS TO THIS PROJECT WITHOUT THE PRIOR WRITTEN CONSENT OF STARBUCKS CORPORATION. THESE DRAWINGS AND SPECIFICATIONS ARE INTENDED TO EXPRESS DESIGN INTENT FOR A PROTOTYPICAL STARBUCKS STORE (WHICH IS SUBJECT TO CHANGE AT ANYTIME) AND DO NOT REFLECT ACTUAL SITE CONDITIONS. NEITHER PARTY SHALL HAVE ANY OBLIGATION NOR LIABILITY TO THE OTHER (EXCEPT STATED ABOVE) UNTIL A WRITTEN AGREEMENT IS FULLY EXECUTED BY BOTH PARTIES.

STARBUCKS TEMPLATE VERSION: i2021-09-13

Design Forum Architects Inc.
2056 Byers Rd
Miamisburg, OH 45342
Tel: (844) 804-7700
Donald J. Rethman
Architect In Charge
License: AR0017303

Design Forum Engineering
2056 Byers Rd
Miamisburg, OH 45342
Tel: (844) 804-7700
Timothy L. Raberding, PE
Professional Engineer
License: 62078

PROJECT NAME:
US 98 & GRIFFIN RD

PROJECT ADDRESS:
3105 US-98 NORTH
LAKELAND, FLORIDA 33801

STORE #:	80004
PROJECT #:	96892-001
ISSUE DATE:	2025-10-10
DESIGNER:	ASHLEY SUEIRAS
PRODUCTION DESIGNER:	ANDY MCLOUD
CHECKED BY:	DONALD RETHMAN

Revision Schedule

Rev	Date	By	Description
1	08/26/25		REV-1
2	08/26/25		REV-2

SHEET TITLE:
REFLECTED CEILING PLAN
SCALE: As indicated

SHEET NUMBER:
A-104

10/9/2025 9:53:31 AM C:\Users\julia.gray\Documents\96892-001_80004_US 98 & Griffin Rd, FL_2025_Julia.gray\FRYY6.rvt

LEGEND

- ELEVATION DATUM
- TRACK LIGHTING
- STRIP LIGHTING
- RECESSED CAN LIGHT
- TROFFER
- EXIT SECURITY LIGHT
- MUSIC SYSTEM SPEAKER
- MUSIC SYSTEM RECESSED SPEAKER
- WIFI ACCESS POINT (WAP)
- SECURITY CAMERA
- PIR MOTION SENSOR
- LINEAR DIFFUSER
- PENDANT LIGHT
- CEILING FAN
- RR SONCE
- SUPPLY AIR DEVICES
- RETURN / EXHAUST AIR DEVICES
- FLOOR LAMP

LIGHTING LEGEND

CUSTOM CAN - LED WALL WASH - 3IN 75MM - BLACK - 1000LM	L 21771
CAN - LED ADJUSTABLE RECESSED - 3IN 75MM - WHITE - 700LM WF	L 21774
TRACK - LED FIXTURE WITH SNOOT - 3IN 75MM - BLACK - 1100LM SPOT	L 21777
CUSTOM CAN - RECESSED CAN LIGHT	L X7001
STRIP - LED TAPE IN HOUSING - VARIABLE LENGTH - BLACK - 350LM PER FT	L 22215

GENERAL NOTES

A. WHERE ACOUSTICAL CEILING MEETS WALL, PROVIDE ANGLE WALL MOULDING FOR REVEAL. MATCH CEILING GRID COLOR WHEN APPLICABLE.

B. PAINT SUBSTITUTIONS ARE NOT ALLOWED. USE STARBUCKS' NATIONAL ACCOUNT "COLOR CODE" WHEN ORDERING PAINTS. SEE SHEET I-602 FOR PAINT SCHEDULES.

C. ALL FIXTURES IN FOOD PREPARATION AREA SHALL HAVE SHATTERPROOF LAMPS IF THE FIXTURE IS NOT LENSED.

D. PROVIDE GROMMET AT ALL CEILING PENETRATIONS FOR FIXTURES/SUPPORTS.

E. ADJUST FOCUS OF ALL TRACK AND RECESSED DIRECTIONAL LIGHTING TO FULLY ILLUMINATE ALL ARTWORK, MENU BOARDS AND MERCHANDISE BAYS.

F. IF PENDANT SUSPENDED LENGTH EXCEEDS 48" (1220MM) FROM CEILING, REPLACE WITH SURFACE-MOUNTED PENDANT AND SUSPEND WITH GC-SUPPLIED CONDUIT AND J-BOX TO DIMENSIONED HEIGHT.

G. CENTER EMERGENCY/EXIT LIGHTS ABOVE DOORS, UON.

KEYED NOTES

1. INSTALL NEW RECESSED CAN LIGHTS AS INDICATED.
2. INSTALL SURFACE MOUNTED TRACK LIGHTING AS INDICATED.
3. INSTALL LED STRIP LIGHT AT COVE AS INDICATED.
4. INSTALL LED STRIP LIGHT AT FRONT BAR COUNTER AS INDICATED.
5. INSTALL RECESSED TROFFER LIGHTS AS INDICATED.
6. MOUNT RESTROOM WALL SCONCE WITH CENTER OF J-BOX AT 5' - 6" AFF AS INDICATED ON RESTROOM ELEVATIONS.
7. INSTALL PENDANT LIGHTS AT CAFE AND ENGINE AREA AS INDICATED.
8. LOCATIONS OF ALL EGRESS LIGHTING FOR REFERENCE ONLY. GC TO VERIFY WITH LOCAL FIRE MARSHAL PRIOR TO INSTALLATION.
9. NOT USED.
10. EXISTING EXTERIOR WALL SCONCES.
11. INSTALL EXTERIOR CEILING FANS BY SB AS INDICATED.
12. INSTALL NEW CANOPY RECESSED CAN LIGHTS BY LL.
13. INSTALL NEW SCONCE AT WATER FILTRATION AREA AS INDICATED.
14. INSTALL EM / EXIT DISCHARGE LIGHT AS INDICATED.
15. NOT USED.
16. INSTALL SCONCE AT CAFE AREA AS INDICATED.
17. INSTALL FLOOR LAMP AT CAFE AREA AS INDICATED.
18. INSTALL SUSPENDED TRACK LIGHTING AS INDICATED. REFER TO INTERIOR FINISH ELEVATIONS FOR MOUNTING HEIGHTS.
19. PROVIDE 4-SQUARE J-BOX FOR FRONT OF HOUSE STROBE LOCATION; SEE DETAIL ON E-501.

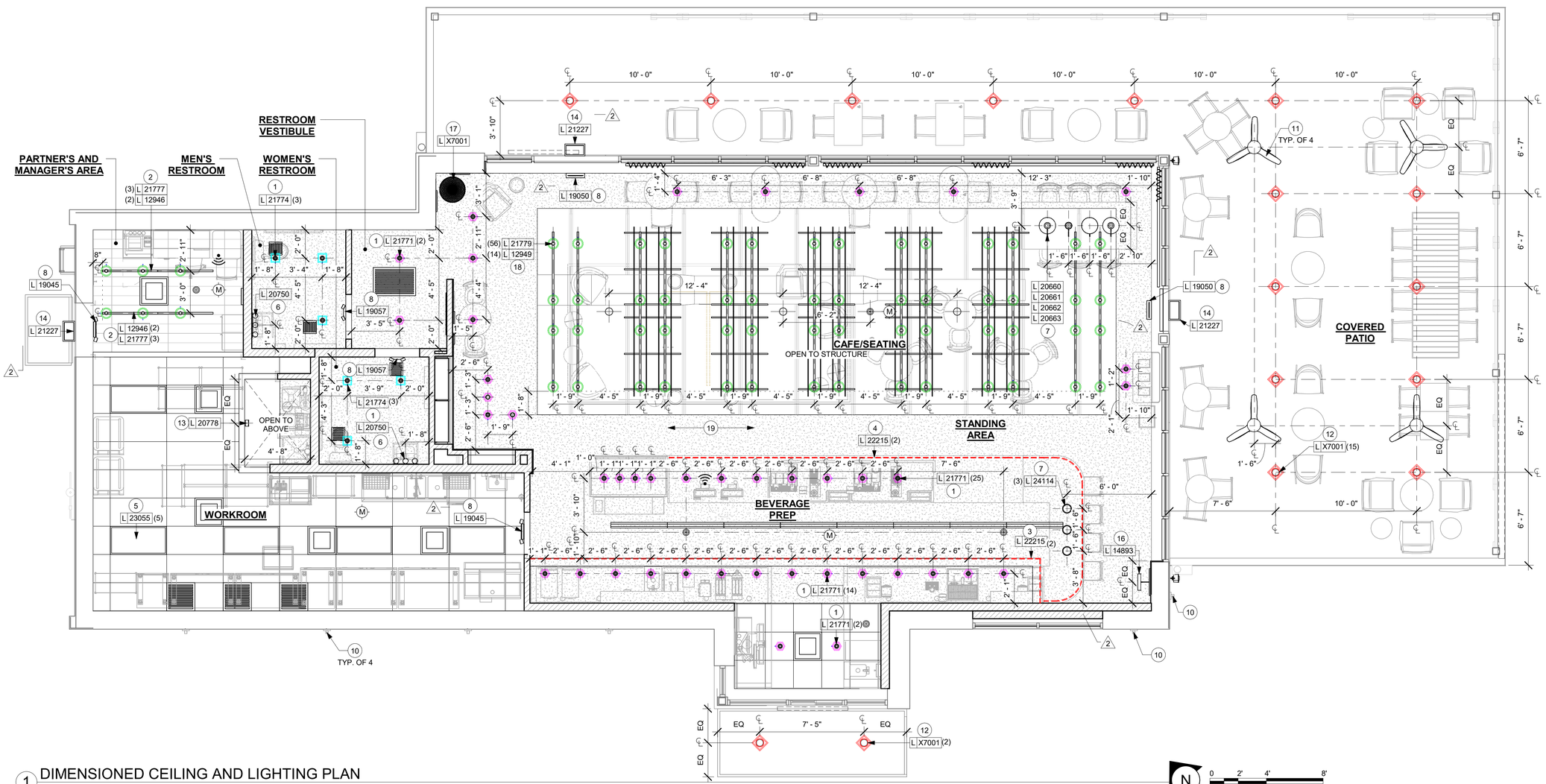

1 DIMENSIONED CEILING AND LIGHTING PLAN
Scale: 1/4" = 1'-0"

N
0 2' 4' 8'
Scale: 1/4" = 1'-0"

FOR CONSTRUCTION

© 2019 STARBUCKS COFFEE COMPANY

STARBUCKS®
2401 UTAH AVENUE SOUTH
SEATTLE, WASHINGTON 98134
(206) 318-1575

THESE DRAWINGS AND THE PROJECT MANUAL ARE CONFIDENTIAL AND SHALL REMAIN THE SOLE PROPERTY OF STARBUCKS CORPORATION, WHICH IS THE OWNER OF THE COPYRIGHT IN THIS WORK. THEY SHALL NOT BE REPRODUCED (IN WHOLE OR IN PART), SHARED WITH THIRD PARTIES OR USED IN ANY MANNER ON OTHER PROJECTS OR EXTENSIONS TO THIS PROJECT WITHOUT THE PRIOR WRITTEN CONSENT OF STARBUCKS CORPORATION. THESE DRAWINGS AND SPECIFICATIONS ARE INTENDED TO EXPRESS DESIGN INTENT FOR A PROTOTYPICAL STARBUCKS STORE (WHICH IS SUBJECT TO CHANGE AT ANYTIME) AND DO NOT REFLECT ACTUAL SITE CONDITIONS. NEITHER PARTY SHALL HAVE ANY OBLIGATION NOR LIABILITY TO THE OTHER (EXCEPT STATED ABOVE) UNTIL A WRITTEN AGREEMENT IS FULLY EXECUTED BY BOTH PARTIES.

STARBUCKS TEMPLATE VERSION: i2021-09-13

Design Forum Architects Inc.
2056 Byers Rd
Miamisburg, OH 45342
Tel: (844) 804-7700
Donald J. Rethman
Architect In Charge
License: AR0017303

Design Forum Engineering
2056 Byers Rd
Miamisburg, OH 45342
Tel: (844) 804-7700
Timothy L. Raberding, PE
Professional Engineer
License: 62078

PROJECT NAME:
US 98 & GRIFFIN RD

PROJECT ADDRESS:
3105 US-98 NORTH
LAKELAND, FLORIDA 33801

STORE #:	80004
PROJECT #:	96892-001
ISSUE DATE:	2025-10-10
DESIGNER:	ASHLEY SUEIRAS
PRODUCTION DESIGNER:	ANDY MCLOUD
CHECKED BY:	DONALD RETHMAN

Revision Schedule

Rev	Date	By	Description
2	08/26/25		REV-2

SHEET TITLE:
DIMENSIONED CEILING AND LIGHTING PLAN
SCALE: AS SHOWN

SHEET NUMBER:
A-105

10/9/2025 9:53:35 AM C:\Users\julia.gray\Documents\96892-001_80004_US 98 & Griffin Rd, FL_2025_Julia.gravFRYY6.rvt

CEILING TREATMENT SCHEDULE - "F"

DESIGN ID	COUNT	DESCRIPTION	FURN. BY	INST. BY	COMMENTS
CEILING					
X6003	10	ACOUSTICAL BAFFLE SYSTEM - 72X48IN 1829X1220MM - 10IN SPACING - FINISH: BARK	SB	GC	FOR ORDERING CONTACT STARBUCKS@MDCWALL.COM. FIX SUPPLIED HARDWARE TO ARMSTRONG 15/16" T GRID, THEN FEED WIRE THROUGH BAFFLES AND ADJUST HEIGH ACCORDINGLY. FINISH: BARK; SEE DETAILS: 1/I-515, 3' - 6" SPACING BETWEEN MODULES.

LIGHTING FIXTURE SCHEDULE - "L"

DESIGN ID	COUNT	DESCRIPTION	FURN. BY	INST. BY	BULB	COMMENTS
EXIT						
19045	2	LED EXIT SIGN WITH EMERGENCY LIGHT - WHITE AND GREEN	SB	GC	INTEGRATED LED	
19050	2	LED EXIT SIGN RECESSED - ALUMINUM AND GREEN	SB	GC	INTEGRATED LED	
19057	2	LED EMERGENCY LIGHT DOUBLE - BLACK	SB	GC	INTEGRATED LED	
LAMP						
X7001	1	CB2 - POLAR BLACK CEMENT FLOOR LAMP	SB	GC	INTEGRATED LED	SKU:445828
PENDANT						
20660	1	PENDANT - ANDLIGHT SPOTLIGHT VOLUMES - BLACK	SB	GC	AS PACKAGED: 1X LED G25 6.5W (DOWN); 1X LED A15 4.5W (UP)	COMBO: DOWNLIGHT : D , UPLIGHT : A
20661	1	PENDANT - ANDLIGHT SPOTLIGHT VOLUMES - BLACK	SB	GC	AS PACKAGED: 1X LED G25 6.5W (DOWN); 1X LED A15 4.5W (UP)	COMBO: DOWNLIGHT : D , UPLIGHT : B
20662	1	PENDANT - ANDLIGHT SPOTLIGHT VOLUMES - BLACK	SB	GC	AS PACKAGED: 1X LED G25 6.5W (DOWN); 1X LED A15 4.5W (UP)	COMBO: DOWNLIGHT : B , UPLIGHT : D
20663	1	PENDANT - ANDLIGHT SPOTLIGHT VOLUMES - BLACK	SB	GC	AS PACKAGED: 1X LED G25 6.5W (DOWN); 1X LED A15 4.5W (UP)	COMBO: DOWNLIGHT : D , UPLIGHT : B
24114	3	PENDANT - PENSEE - GREEN AND GOLD	SB	GC	INTEGRATED LED	
RECESSED CAN						
21771	43	CAN - LED ADJUSTABLE RECESSED - 3IN 75MM - BLACK - 800LM FLOOD	SB	GC	INTEGRATED LED	
21774	6	CAN - LED ADJUSTABLE RECESSED - 3IN 75MM - WHITE - 700LM WF	SB	GC	INTEGRATED LED	
SCONCE						
14893	1	LED PICTURE LIGHT TRADITIONAL - 14IN 355MM - BRONZE	SB	GC	INTEGRATED LED	
20750	2	SCONCE - KUZCO PLUTO TRIPLE - VINTAGE BRASS	SB	GC	INTEGRATED LED	
20778	1	SCONCE - RBW CRISP - FROSTED	SB	GC	INTEGRATED LED	
21227	3	LED SECURITY LIGHT WST - BLACK - 1500LM FORWARD	SB	GC	INTEGRATED LED	
STRIP						
22215	4	STRIP - LED TAPE IN HOUSING - VARIABLE LENGTH - BLACK - 350LM PER FT	SB	GC	INTEGRATED LED	FIELD TRIMMABLE TO 0.9 IN LENGTHS V.I.F. (2) 24' - 0" (1) 15' - 0" (1) 14' - 0"
TRACK						
12946	4	TRACK - WITH CONNECTORS - 4FT 122CM - BLACK - 1 CIRCUIT	SB	GC	INTEGRATED LED	ALL BAR / CAFE TRACK LIGHTING TO BE RUN THROUGH 1A / 2A CURRENT LIMITING DEVICE #RCLF12BL-TCL2BL; SEE ELECTRICAL DRAWINGS FOR ADDITIONAL INFORMATION
12949	14	TRACK - WITH CONNECTORS - 12FT 365CM - BLACK - 1 CIRCUIT	SB	GC	INTEGRATED LED	ALL BAR / CAFE TRACK LIGHTING TO BE RUN THROUGH 1A / 2A CURRENT LIMITING DEVICE #RCLF12BL-TCL2BL; SEE ELECTRICAL DRAWINGS FOR ADDITIONAL INFORMATION
21777	6	TRACK - LED FIXTURE WITH SNOOT - 3IN 75MM - BLACK - 1100LM SPOT	SB	GC	INTEGRATED LED	
21779	56	TRACK - LED FIXTURE WITH SNOOT - 3IN 75MM - BLACK - 1100LM FLOOD	SB	GC	INTEGRATED LED	
TROFFER						
23055	5	TROFFER - LED RECESSED - 24X48IN 600X1200MM - WHITE - 2700K	SB	GC	INTEGRATED LED	

PAINT SCHEDULE

COLOR CODE	DESCRIPTION	LRV	FURN. BY	INST. BY	COMMENTS
SW6991-ES	SW - BLACK MAGIC - EEGSHELL	3	GC	GC	USE PRIMER CP-1
SW7020-ES	SW - BLACK FOX - EGGSHELL	7	GC	GC	USE PRIMER CP-1
SW7020-SG	SW - BLACK FOX - SEMIGLOSS	7	GC	GC	USE PRIMER CP-1
SW7031-ES	SW - MEGA GREIGE - EGGSHELL	37	GC	GC	USE PRIMER CP-1
SW9090-ES	SW - CARAIBE - EGGSHELL	13	GC	GC	USE PRIMER CP-1

CEILING TREATMENT SCHEDULE - "U"

DESIGN ID	AREA	DESCRIPTION	FURN. BY	INST. BY	COMMENTS
OTHER					
11302	390 SF	ACT - WHITE - 2X4FT 61X122CM	GC	GC	VINYL CLAD AT BOH
19734	63 SF	ACT - ULTIMA - 2X2FT 61X61CM	GC	GC	FACTORY FINISHED SW7032 WARM STONE IN DT AREA AND WORKROOM; FOR ORDERING CONTACT DEB PICKENS AT DPLPICKENS@ARMSTRONGCEILINGS.COM, PH: 480-695-9053
X9301	92 SF	CIRRUS SECOND LOOK CEILING - 2X4FT 61X122CM LINEAR PANELS (III PANEL SCORING CREATES NOMINAL 8INX4FT)	GC	GC	PROVIDED BY: ARMSTRONG; FACTORY FINISHED BY MANUFACTURER TO MATCH SW7031-ES

RESPONSIBILITY LEGEND

FURN. BY	INST. BY
SB - FURNISHED BY STARBUCKS	GC - INSTALLED BY GENERAL CONTRACTOR
GC - FURNISHED BY GENERAL CONTRACTOR	SB - INSTALLED BY STARBUCKS
VD - FURNISHED BY VENDOR	VD - INSTALLED BY VENDOR

NOTE: ALL RESPONSIBILITIES TO BE CONFIRMED WITH STARBUCKS CONSTRUCTION MANAGER PRIOR TO ORDERING / CONSTRUCTION.

FOR CONSTRUCTION

© 2019 STARBUCKS COFFEE COMPANY

STARBUCKS®
2401 UTAH AVENUE SOUTH
SEATTLE, WASHINGTON 98134
(206) 318-1575

THESE DRAWINGS AND THE PROJECT MANUAL ARE CONFIDENTIAL AND SHALL REMAIN THE SOLE PROPERTY OF STARBUCKS CORPORATION, WHICH IS THE OWNER OF THE COPYRIGHT IN THIS WORK. THEY SHALL NOT BE REPRODUCED (IN WHOLE OR IN PART), SHARED WITH THIRD PARTIES OR USED IN ANY MANNER ON OTHER PROJECTS OR EXTENSIONS TO THIS PROJECT WITHOUT THE PRIOR WRITTEN CONSENT OF STARBUCKS CORPORATION. THESE DRAWINGS AND SPECIFICATIONS ARE INTENDED TO EXPRESS DESIGN INTENT FOR A PROTOTYPICAL STARBUCKS STORE (WHICH IS SUBJECT TO CHANGE AT ANYTIME) AND DO NOT REFLECT ACTUAL SITE CONDITIONS. NEITHER PARTY SHALL HAVE ANY OBLIGATION NOR LIABILITY TO THE OTHER (EXCEPT STATED ABOVE) UNTIL A WRITTEN AGREEMENT IS FULLY EXECUTED BY BOTH PARTIES.

STARBUCKS TEMPLATE VERSION: i2021-09-13

Design Forum Architects Inc.
2056 Byers Rd
Miamisburg, OH 45342
Tel: (844) 804-7700
Donald J. Rethman
Architect In Charge
License: AR0017303

Design Forum Engineering
2056 Byers Rd
Miamisburg, OH 45342
Tel: (844) 804-7700
Timothy L. Raberding, PE
Professional Engineer
License: 62078

PROJECT NAME:
US 98 & GRIFFIN RD

PROJECT ADDRESS:
3105 US-98 NORTH
LAKELAND, FLORIDA 33801

STORE #:	80004
PROJECT #:	96892-001
ISSUE DATE:	2025-10-10
DESIGNER:	ASHLEY SUEIRAS
PRODUCTION DESIGNER:	ANDY MCLOUD
CHECKED BY:	DONALD RETHMAN

Revision Schedule

Rev	Date	By	Description
2	08/26/25		REV-2

SHEET TITLE:
CEILING & LIGHTING SCHEDULE
SCALE: 1/4" = 1'-0"

SHEET NUMBER:
A-105.1

10/9/2025 9:53:37 AM C:\Users\julia.gray\Documents\96892-001_80004_US 98 & Griffin Rd, FL_2025_Julia.grayFRYY6.rvt

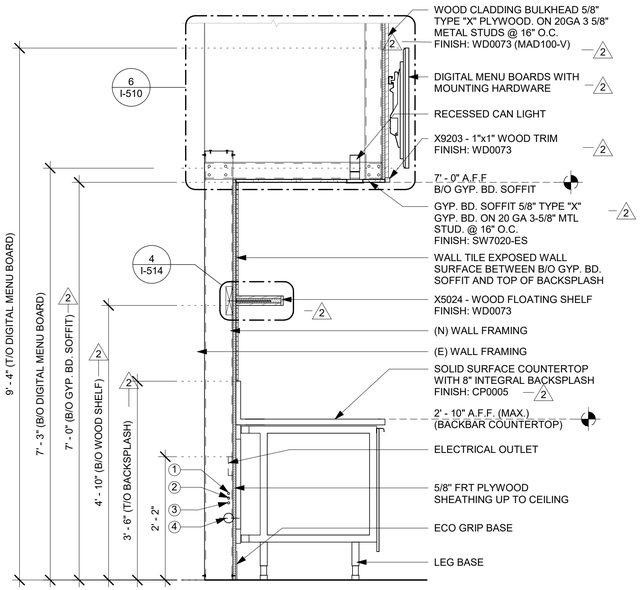

NOTES:

1. 1'-7" AFF (CW SUPPLY)
2. 1'-6" AFF (CWF SUPPLY)
3. 1'-5" AFF (HW SUPPLY)
4. VARIES: 1/4" PER FOOT FALL (ABS 2" WASTE LINE)

1 WALL SECTION AT BACKBAR

Scale: 3/4" = 1'-0"

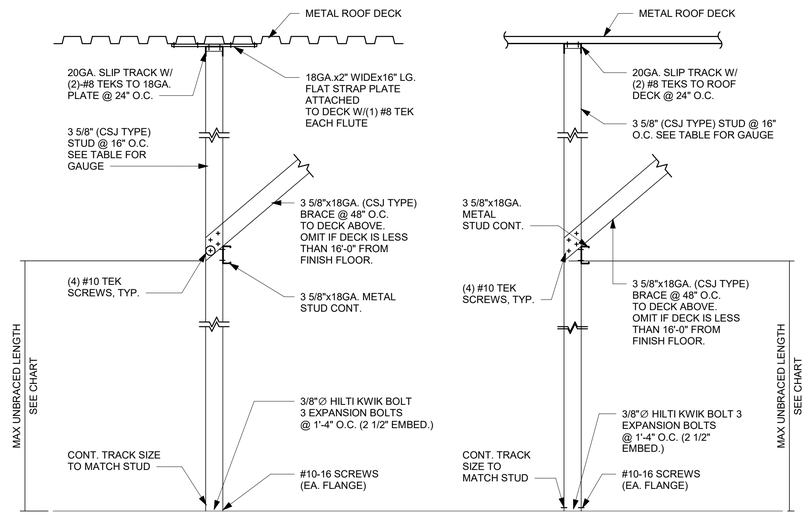

PARALLEL TO ROOF DECK FLUTE DIRECTION

PERPENDICULAR TO ROOF DECK FLUTE DIRECTION

2 NEW PARTITION WALL TO STRUCTURE

Scale: 3/4" = 1'-0"

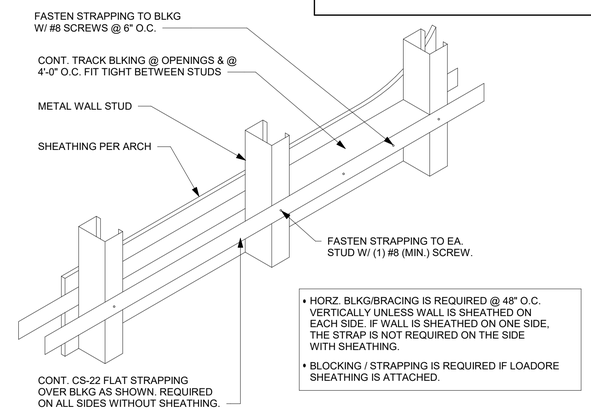

- HORZ. BLKG/BRACING IS REQUIRED @ 48" O.C. VERTICALLY UNLESS WALL IS SHEATHED ON EACH SIDE. IF WALL IS SHEATHED ON ONE SIDE, THE STRAP IS NOT REQUIRED ON THE SIDE WITH SHEATHING.
- BLOCKING / STRAPPING IS REQUIRED IF LOADORE SHEATHING IS ATTACHED.

3 TYPICAL WALL BLOCKING_BRACING

Scale: 3/4" = 1'-0"

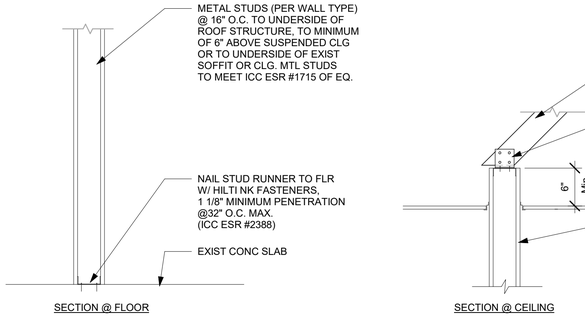

4 NEW PARTITION WALL 6" ABOVE CEILING

Scale: 1" = 1'-0"

PARTITION WALL SCHEDULE					
WALL HEIGHT	STUD SIZE	DEFL TRACK	DEFL TRACK SPANNING BTWN (E) JOISTS		BOT TRACK
15 FEET	362S137-33	33 MIL	JST @ 4' O.C.	54 MIL	33 MIL
			JST @ 6' O.C.	68 MIL	
20 FEET	550S162-33	33 MIL	JST @ 4' O.C.	68 MIL	33 MIL
			JST @ 6' O.C.	97 MIL	
25 FEET	600S200-43	43 MIL	JST @ 4' O.C.	68 MIL	33 MIL
			JST @ 6' O.C.	97 MIL	

5 PARTITION WALL SCHEDULE

Scale: 3/4" = 1'-0"

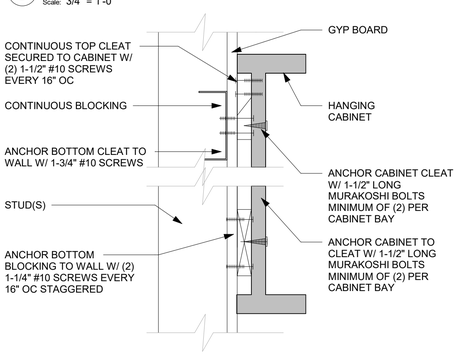

6 ANCHOR DETAIL

Scale: 3" = 1'-0"

WALL TYPE FASTENER SCHEDULE			
WALL TYPE	WALL BLOCKING	FASTENERS	NOTES
WOOD FRAME	X	#8 X3" (75MM) WD OR EQUIVALENT	REFER TO BLOCKING REQUIREMENTS
METAL FRAME	X	#6CT. X11/4" (30MM) MTL/WD OR EQUIVALENT	REFER TO BLOCKING REQUIREMENTS
CMU		MIN. 5/16"X3" (8MMX75MM) TAPCON OR EQUIVALENT	SPACE PER DETAIL THIS SHEET
CONCRETE		MIN. 1/4"X3" (7MMX75MM) SLEEVE ANCHOR OR EQUIVALENT	SPACE PER DETAIL THIS SHEET
BRICK		MIN. 1/4"X1" (7MMX25MM) WEDGE ANCHOR OR EQUIVALENT	SPACE PER DETAIL THIS SHEET AVOID SETTING ANCHORS IN MORTAR JOINTS

STUD WALL BLOCKING REQUIREMENTS:
WOOD STUD WALLS REQUIRE MIN. 2"X6" (50MMX150MM) WOOD BLOCKING SECURED FLUSH TO STUD FACE WITH (3) 10D NAILS (OR EQUIVALENT)

METAL STUD WALLS REQUIRE MIN. 2"X6" (50MMX150MM) WOOD BLOCKING SECURED FLUSH TO STUD FACE WITH MIN. (3) #6 CT. 1.25" (30MM) SCREWS (OR EQUIVALENT)

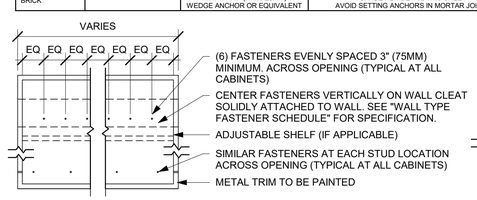

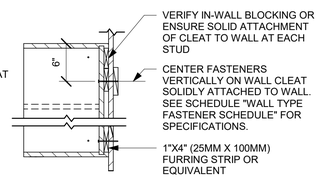

7 UPPER CABINET ATTACHMENT

Scale: 1" = 1'-0"

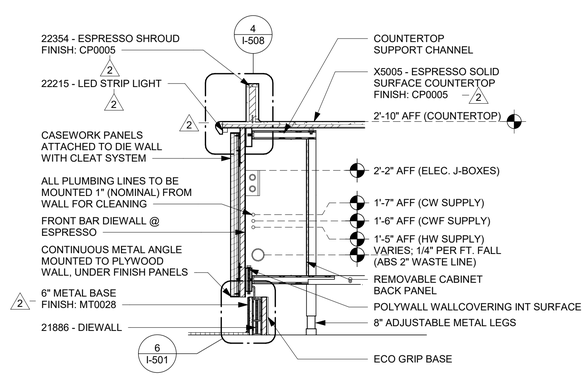

8 DIEWALL SECTION AT FRONT BAR

Scale: 1" = 1'-0"

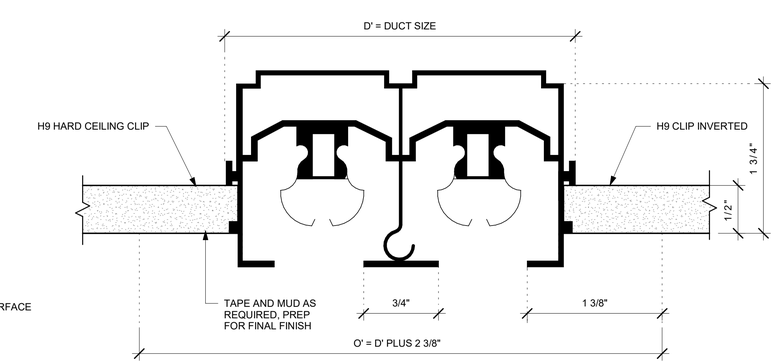

9 LINEAR DIFFUSER DETAIL

Scale: 6" = 1'-0"

FOR CONSTRUCTION

© 2019 STARBUCKS COFFEE COMPANY

STARBUCKS®
2401 UTAH AVENUE SOUTH
SEATTLE, WASHINGTON 98134
(206) 318-1575

THESE DRAWINGS AND THE PROJECT MANUAL ARE CONFIDENTIAL AND SHALL REMAIN THE SOLE PROPERTY OF STARBUCKS CORPORATION, WHICH IS THE OWNER OF THE COPYRIGHT IN THIS WORK. THEY SHALL NOT BE REPRODUCED (IN WHOLE OR IN PART), SHARED WITH THIRD PARTIES OR USED IN ANY MANNER ON OTHER PROJECTS OR EXTENSIONS TO THIS PROJECT WITHOUT THE PRIOR WRITTEN CONSENT OF STARBUCKS CORPORATION. THESE DRAWINGS AND SPECIFICATIONS ARE INTENDED TO EXPRESS DESIGN INTENT FOR A PROTOTYPICAL STARBUCKS STORE (WHICH IS SUBJECT TO CHANGE AT ANYTIME) AND DO NOT REFLECT ACTUAL SITE CONDITIONS. NEITHER PARTY SHALL HAVE ANY OBLIGATION NOR LIABILITY TO THE OTHER (EXCEPT STATED ABOVE) UNTIL A WRITTEN AGREEMENT IS FULLY EXECUTED BY BOTH PARTIES.

STARBUCKS TEMPLATE VERSION: i2021-09-13

Design Forum Architects Inc.
2056 Byers Rd
Miamisburg, OH 45342
Tel: (844) 804-7700
Donald J. Rethman
Architect In Charge
License: AR0017303

Design Forum Engineering
2056 Byers Rd
Miamisburg, OH 45342
Tel: (844) 804-7700
Timothy L. Raberding, PE
Professional Engineer
License: 62078

PROJECT NAME:
US 98 & GRIFFIN RD

PROJECT ADDRESS:
3105 US-98 NORTH
LAKELAND, FLORIDA 33801

STORE #:	80004
PROJECT #:	96892-001
ISSUE DATE:	2025-10-10
DESIGNER:	ASHLEY SUEIRAS
PRODUCTION DESIGNER:	ANDY MCLOUD
CHECKED BY:	DONALD RETHMAN

Revision Schedule

Rev	Date	By	Description
2	08/26/25		REV-2

SHEET TITLE:
BUILDING DETAILS

SCALE: AS SHOWN

SHEET NUMBER:
A-501

10/9/2025 9:53:38 AM C:\Users\julia.gray\Documents\96892-001_80004_US 98 & Griffin Rd, FL_2025_Julia.grayFRYY6.rvt

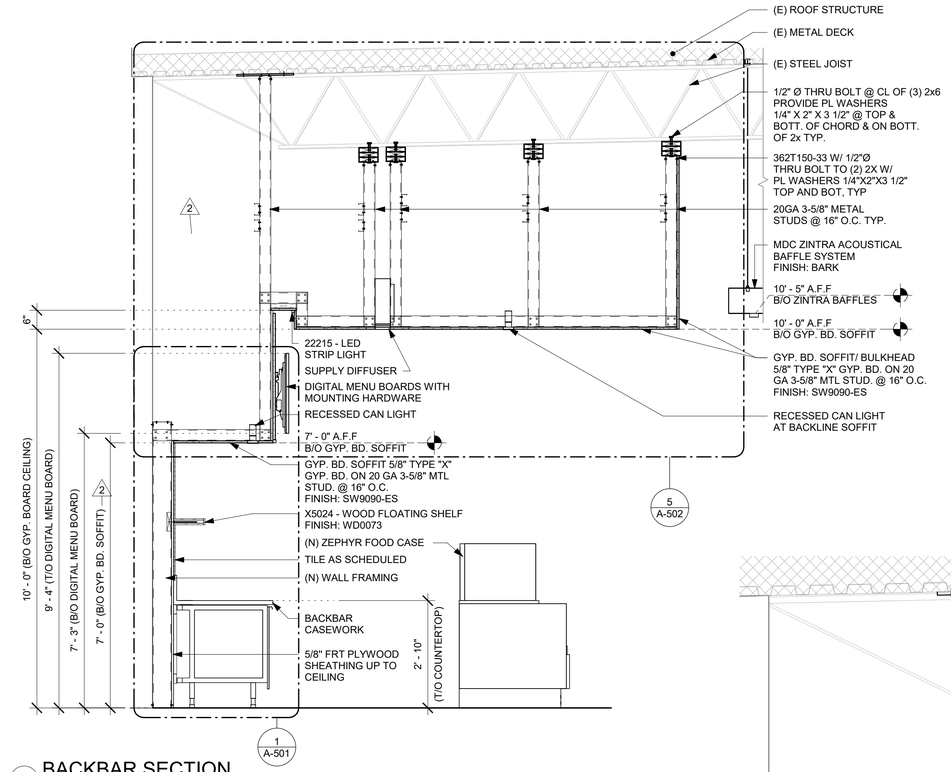

1 BACKBAR SECTION
Scale: 1/2" = 1'-0"

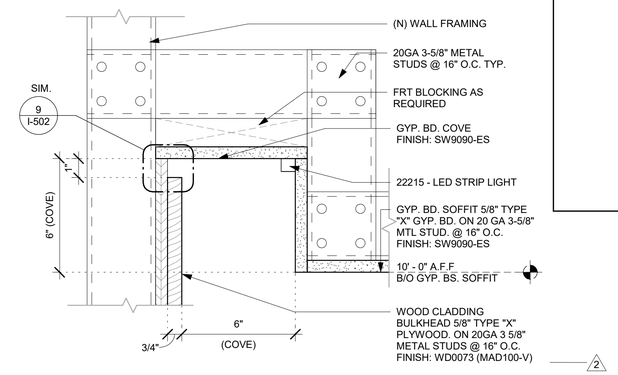

3 COVE DETAIL AT BACKBAR
Scale: 3" = 1'-0"

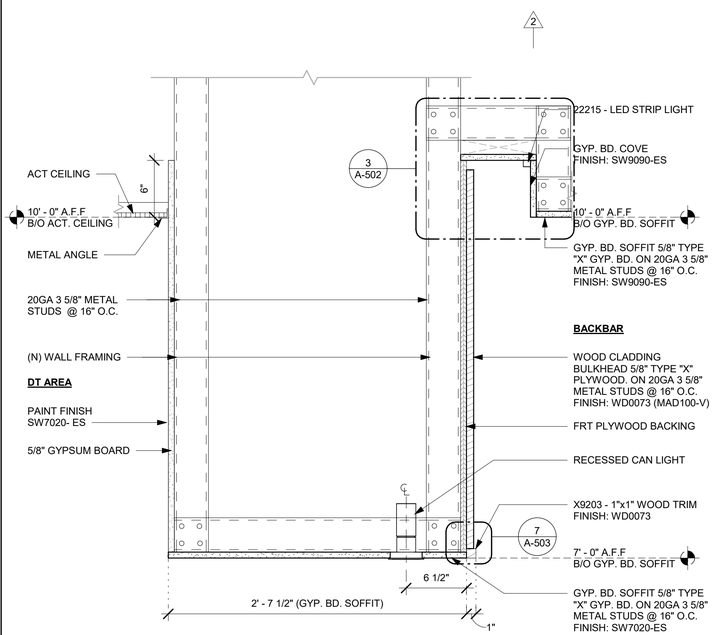

4 HEADER AT DT AREA
Scale: 1 1/2" = 1'-0"

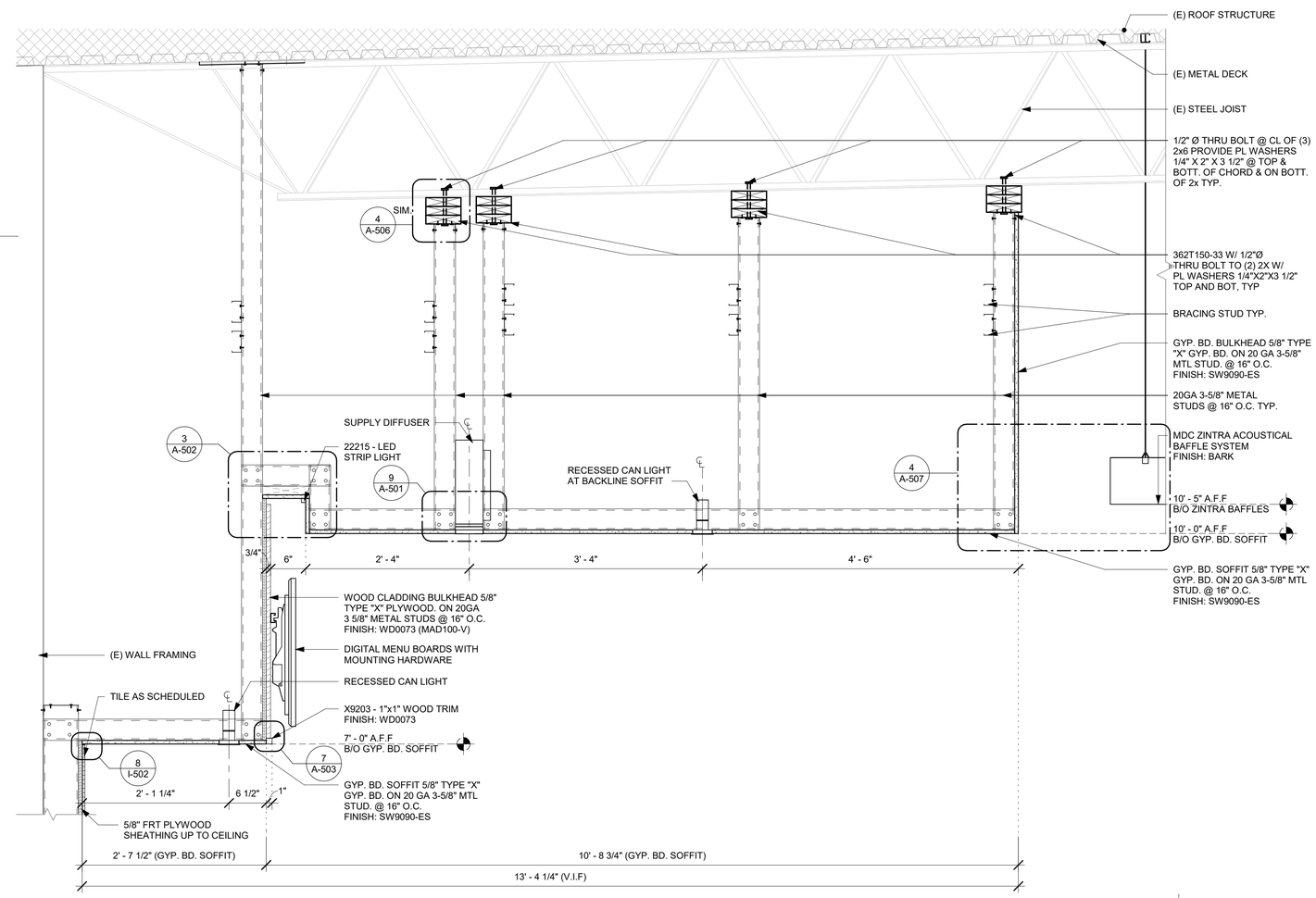

5 SOFFIT CONSTRUCTION
Scale: 1" = 1'-0"

FOR CONSTRUCTION

© 2019 STARBUCKS COFFEE COMPANY

STARBUCKS®
2401 UTAH AVENUE SOUTH
SEATTLE, WASHINGTON 98134
(206) 318-1575

THESE DRAWINGS AND THE PROJECT MANUAL ARE CONFIDENTIAL AND SHALL REMAIN THE SOLE PROPERTY OF STARBUCKS CORPORATION, WHICH IS THE OWNER OF THE COPYRIGHT IN THIS WORK. THEY SHALL NOT BE REPRODUCED (IN WHOLE OR IN PART), SHARED WITH THIRD PARTIES OR USED IN ANY MANNER ON OTHER PROJECTS OR EXTENSIONS TO THIS PROJECT WITHOUT THE PRIOR WRITTEN CONSENT OF STARBUCKS CORPORATION. THESE DRAWINGS AND SPECIFICATIONS ARE INTENDED TO EXPRESS DESIGN INTENT FOR A PROTOTYPICAL STARBUCKS STORE (WHICH IS SUBJECT TO CHANGE AT ANYTIME) AND DO NOT REFLECT ACTUAL SITE CONDITIONS. NEITHER PARTY SHALL HAVE ANY OBLIGATION NOR LIABILITY TO THE OTHER (EXCEPT STATED ABOVE) UNTIL A WRITTEN AGREEMENT IS FULLY EXECUTED BY BOTH PARTIES.

STARBUCKS TEMPLATE VERSION: i2021-09-13

Design Forum Architects Inc.
2056 Byers Rd
Miamisburg, OH 45342
Tel: (844) 804-7700
Donald J. Rethman
Architect In Charge
License: AR0017303

Design Forum Engineering
2056 Byers Rd
Miamisburg, OH 45342
Tel: (844) 804-7700
Timothy L. Raberding, PE
Professional Engineer
License: 62078

PROJECT NAME:
US 98 & GRIFFIN RD

PROJECT ADDRESS:
3105 US-98 NORTH
LAKELAND, FLORIDA 33801

STORE #:	80004
PROJECT #:	96892-001
ISSUE DATE:	2025-10-10
DESIGNER:	ASHLEY SUEIRAS
PRODUCTION DESIGNER:	ANDY MCLOUD
CHECKED BY:	DONALD RETHMAN

Revision Schedule

Rev	Date	By	Description
2	08/26/25		REV-2

SHEET TITLE:
BUILDING DETAILS

SCALE: AS SHOWN

SHEET NUMBER:
A-502

10/9/2025 9:53:39 AM C:\Users\julia.gray\Documents\96892-001_80004_US 98 & Griffin Rd, FL_2025_Julia.grayFRYY6.rvt

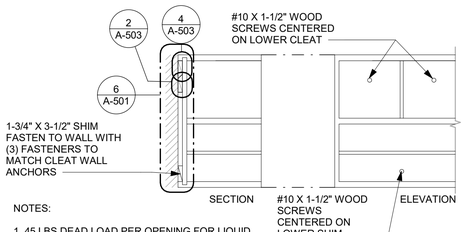

NOTES:

1. 45 LBS DEAD LOAD PER OPENING FOR LIQUID STORAGE OVER AND ABOVE THE CASEWORK ITSELF.

2. A LIVE LOAD OF A PARTNER EITHER PULLING AND OR CLIMBING ON THE CASEWORK.

1 BLOCKING AT CASEWORK

Scale: 1/2" = 1'-0"

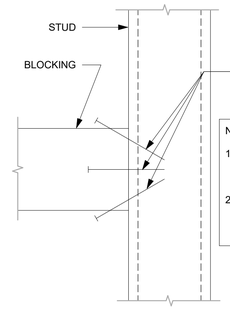

NOTES:

1. 45 LBS DEAD LOAD PER OPENING FOR LIQUID STORAGE OVER AND ABOVE THE CASEWORK ITSELF.

2. A LIVE LOAD OF A PARTNER EITHER PULLING AND OR CLIMBING ON THE CASEWORK.

2 BLOCKING TO METAL STUD

Scale: 1/2" = 1'-0"

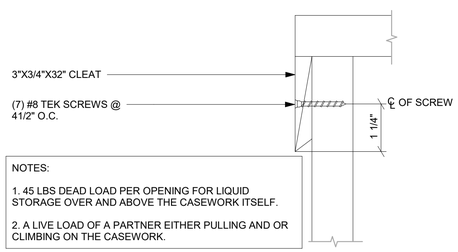

NOTES:

1. 45 LBS DEAD LOAD PER OPENING FOR LIQUID STORAGE OVER AND ABOVE THE CASEWORK ITSELF.

2. A LIVE LOAD OF A PARTNER EITHER PULLING AND OR CLIMBING ON THE CASEWORK.

3 CLEAT TO FRAME

Scale: 1/2" = 1'-0"

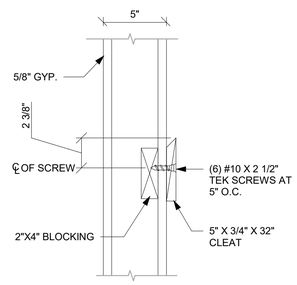

4 CLEAT TO WOOD BLOCKING

Scale: 1/2" = 1'-0"

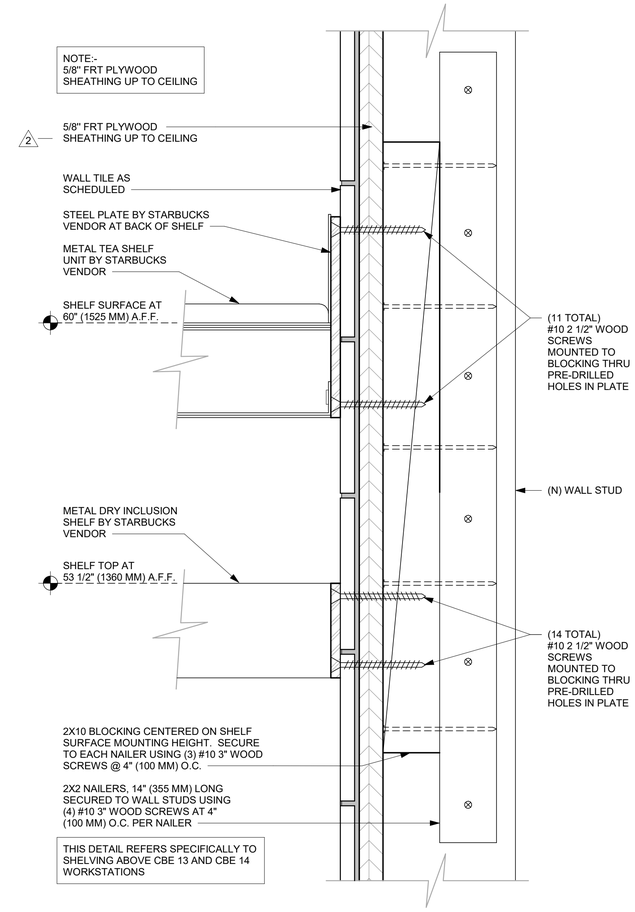

5 METAL TEA AND DRY INCLUSION SHELF (N) WALL ATTACHMENT

Scale: 6" = 1'-0"

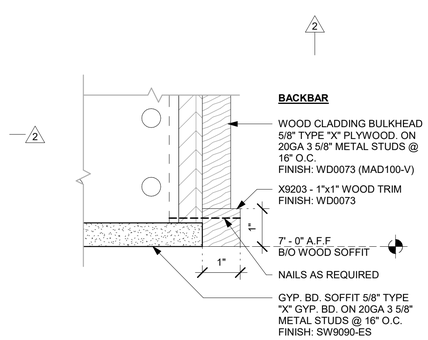

7 X9203 - WOOD TRIM DETAIL

Scale: 6" = 1'-0"

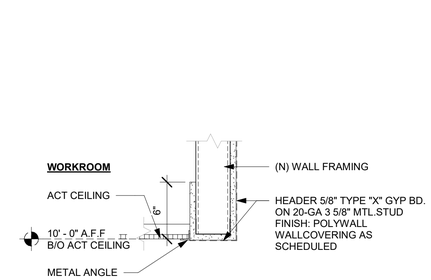

9 HEADER AT WATER FILTRATION

Scale: 1 1/2" = 1'-0"

FOR CONSTRUCTION

© 2019 STARBUCKS COFFEE COMPANY

STARBUCKS®
2401 UTAH AVENUE SOUTH
SEATTLE, WASHINGTON 98134
(206) 318-1575

THESE DRAWINGS AND THE PROJECT MANUAL ARE CONFIDENTIAL AND SHALL REMAIN THE SOLE PROPERTY OF STARBUCKS CORPORATION, WHICH IS THE OWNER OF THE COPYRIGHT IN THIS WORK. THEY SHALL NOT BE REPRODUCED (IN WHOLE OR IN PART), SHARED WITH THIRD PARTIES OR USED IN ANY MANNER ON OTHER PROJECTS OR EXTENSIONS TO THIS PROJECT WITHOUT THE PRIOR WRITTEN CONSENT OF STARBUCKS CORPORATION. THESE DRAWINGS AND SPECIFICATIONS ARE INTENDED TO EXPRESS DESIGN INTENT FOR A PROTOTYPICAL STARBUCKS STORE (WHICH IS SUBJECT TO CHANGE AT ANYTIME) AND DO NOT REFLECT ACTUAL SITE CONDITIONS. NEITHER PARTY SHALL HAVE ANY OBLIGATION NOR LIABILITY TO THE OTHER (EXCEPT STATED ABOVE) UNTIL A WRITTEN AGREEMENT IS FULLY EXECUTED BY BOTH PARTIES.

STARBUCKS TEMPLATE VERSION: i2021-09-13

Design Forum Architects Inc.
2056 Byers Rd
Miamisburg, OH 45342
Tel: (844) 804-7700
Donald J. Rethman
Architect In Charge
License: AR0017303

Design Forum Engineering
2056 Byers Rd
Miamisburg, OH 45342
Tel: (844) 804-7700
Timothy L. Raberding, PE
Professional Engineer
License: 62078

PROJECT NAME:
US 98 & GRIFFIN RD

PROJECT ADDRESS:
3105 US-98 NORTH
LAKELAND, FLORIDA 33801

STORE #:	80004
PROJECT #:	96892-001
ISSUE DATE:	2025-10-10
DESIGNER:	ASHLEY SUEIRAS
PRODUCTION DESIGNER:	ANDY MCLOUD
CHECKED BY:	DONALD RETHMAN

Revision Schedule

Rev	Date	By	Description
2	08/26/25		REV-2

SHEET TITLE:
BUILDING DETAILS

SCALE: AS SHOWN

SHEET NUMBER:
A-503

10/9/2025 9:53:40 AM C:\Users\julia.gray\Documents\96892-001_80004_US 98 & Griffin Rd, FL_2025_Julia.grayFRYY6.rvt

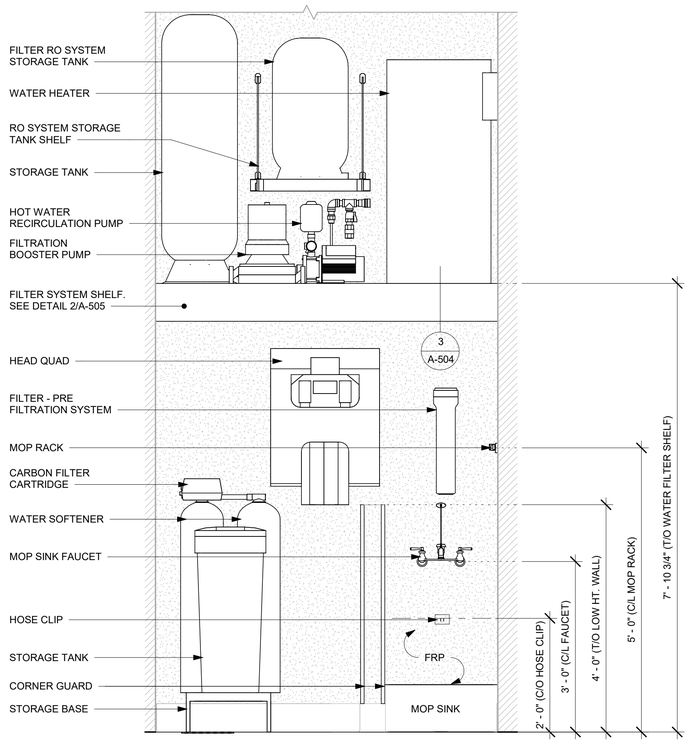

1 WATER FILTRATION SYSTEM ELEVATION
Scale: 3/4" = 1'-0"

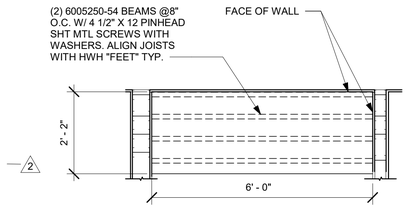

2 FILTER SYSTEM SHELF PLAN
Scale: 1/2" = 1'-0"

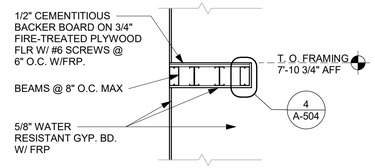

3 FILTER SYSTEM SHELF SECTION
Scale: 1/2" = 1'-0"

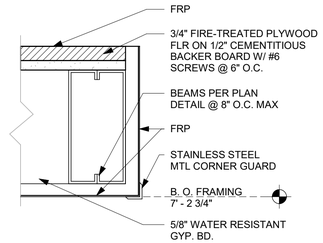

4 FILTER SYSTEM SHELF EDGE
Scale: 3" = 1'-0"

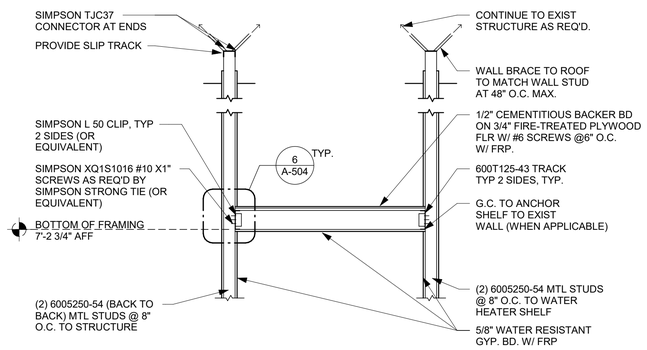

5 FILTER SYSTEM SHELF ELEVATION
Scale: 1/2" = 1'-0"

NOTES TO CONTRACTOR:
1. PRE DRILL HOLES THROUGH S.S. ANGLE TO PREVENT DAMAGE TO SCREWS.

2. TEK SCREWS OR EQUIVALENT TO BE USED.

3. ANGLE TO BE CONTINUOUS (NO SPLICES)

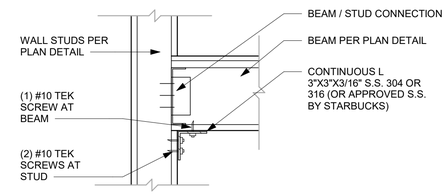

6 FILTER SYSTEM SHELF ANGLE SUPPORT DETAIL
Scale: 1 1/2" = 1'-0"

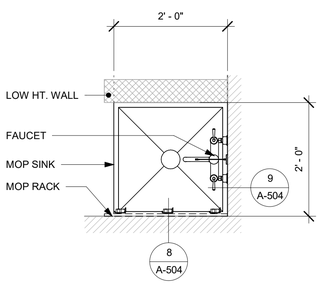

7 MOP SINK - PLAN
Scale: 3/4" = 1'-0"

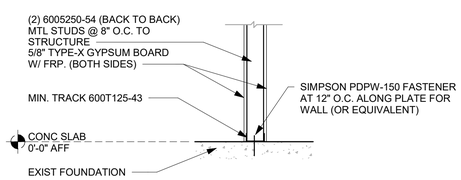

8 FILTER SYSTEM SHELF CONNECTION AT FOUNDATION
Scale: 3/4" = 1'-0"

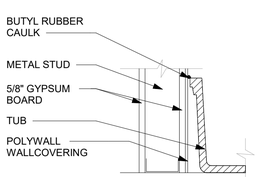

9 FRP AT MOP SINK
Scale: 1 1/2" = 1'-0"

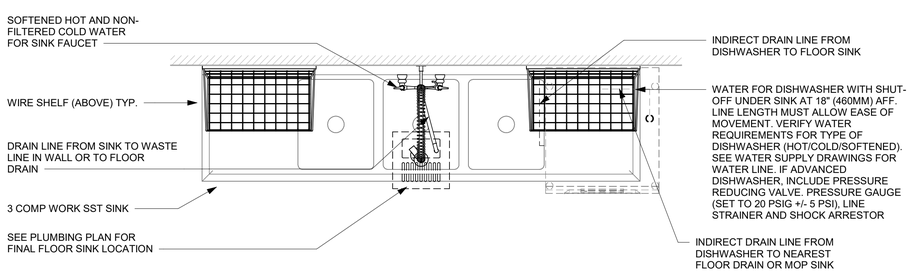

10 3 - COMP PLAN - SANITIZER(UNDER)
Scale: 3/4" = 1'-0"

-SECURE TUBING TO WALL ABOVE SINK BACKSPLASH W/ ZIP TIES.

-MOUNT TEST STRIP BOX TO WALL OVER THE "CLEAN" DRAINBOARD.

-ARCHITECT TO COORDINATE WITH LICENSEE REGARDING SAN/WASH EQUIPMENT.

-MOUNT SAN/WASH EQUIPMENT TO WALL ABOVE THE "DIRTY" SIDE OF THE SINK ONLY.

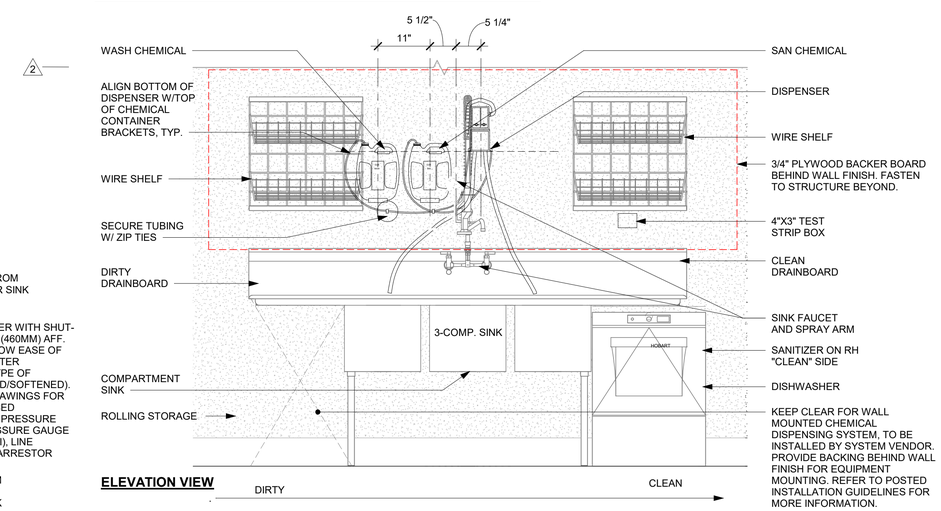

11 CLICK SAN/WASH INSTALL (SANITIZER BELOW)
Scale: 3/4" = 1'-0"

FOR CONSTRUCTION

© 2019 STARBUCKS COFFEE COMPANY

STARBUCKS®
2401 UTAH AVENUE SOUTH
SEATTLE, WASHINGTON 98134
(206) 318-1575

THESE DRAWINGS AND THE PROJECT MANUAL ARE CONFIDENTIAL AND SHALL REMAIN THE SOLE PROPERTY OF STARBUCKS CORPORATION, WHICH IS THE OWNER OF THE COPYRIGHT IN THIS WORK. THEY SHALL NOT BE REPRODUCED (IN WHOLE OR IN PART), SHARED WITH THIRD PARTIES OR USED IN ANY MANNER ON OTHER PROJECTS OR EXTENSIONS TO THIS PROJECT WITHOUT THE PRIOR WRITTEN CONSENT OF STARBUCKS CORPORATION. THESE DRAWINGS AND SPECIFICATIONS ARE INTENDED TO EXPRESS DESIGN INTENT FOR A PROTOTYPICAL STARBUCKS STORE (WHICH IS SUBJECT TO CHANGE AT ANYTIME) AND DO NOT REFLECT ACTUAL SITE CONDITIONS. NEITHER PARTY SHALL HAVE ANY OBLIGATION NOR LIABILITY TO THE OTHER (EXCEPT STATED ABOVE) UNTIL A WRITTEN AGREEMENT IS FULLY EXECUTED BY BOTH PARTIES.

STARBUCKS TEMPLATE VERSION: i2021-09-13

Design Forum Architects Inc.
2056 Byers Rd
Miamisburg, OH 45342
Tel: (844) 804-7700
Donald J. Rethman
Architect In Charge
License: AR0017303

Design Forum Engineering
2056 Byers Rd
Miamisburg, OH 45342
Tel: (844) 804-7700
Timothy L. Raberding, PE
Professional Engineer
License: 62078

PROJECT NAME:
US 98 & GRIFFIN RD

PROJECT ADDRESS:
3105 US-98 NORTH
LAKELAND, FLORIDA 33801

STORE #:	80004
PROJECT #:	96892-001
ISSUE DATE:	2025-10-10
DESIGNER:	ASHLEY SUEIRAS
PRODUCTION DESIGNER:	ANDY MCLOUD
CHECKED BY:	DONALD RETHMAN

Revision Schedule

Rev	Date	By	Description
2	08/26/25		REV-2

SHEET TITLE:
WORKROOM DETAILS

SCALE: AS SHOWN

SHEET NUMBER:
A-504

10/9/2025 9:53:42 AM C:\Users\julia.gray\Documents\96892-001_80004_US 98 & Griffin Rd, FL_2025_Julia.gray\FRYY6.rvt

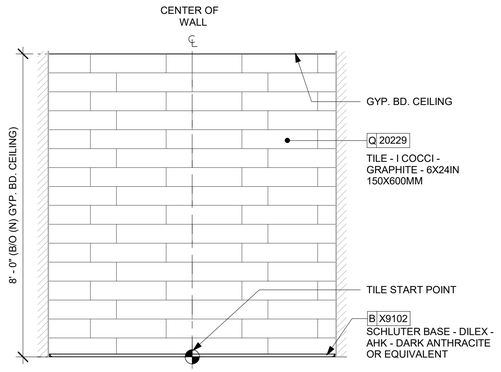

1 WALL TILE PATTERN AT RESTROOM

Scale: 1/2" = 1'-0"

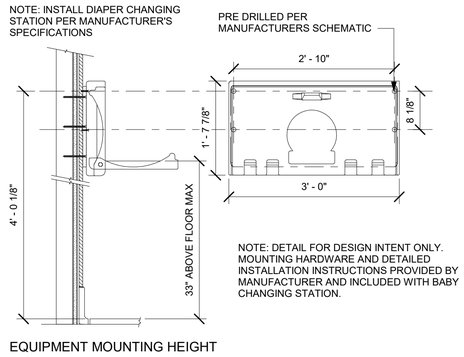

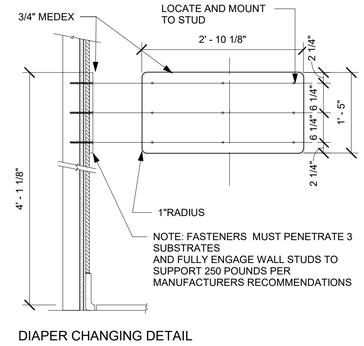

2 WALL MOUNTED BABY CHANGING EQUIPMENT DETAILS

Scale: 3/4" = 1'-0"

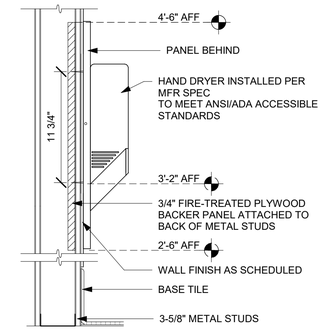

3 HAND DRYER BLOCKING

Scale: 1 1/2" = 1'-0"

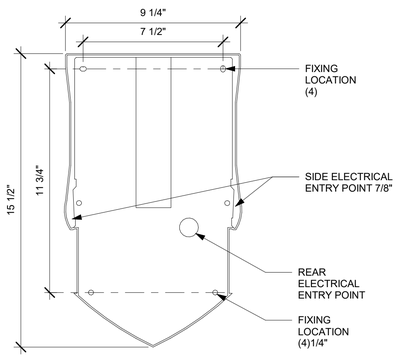

4 HAND DRYER SECTION

Scale: 3" = 1'-0"

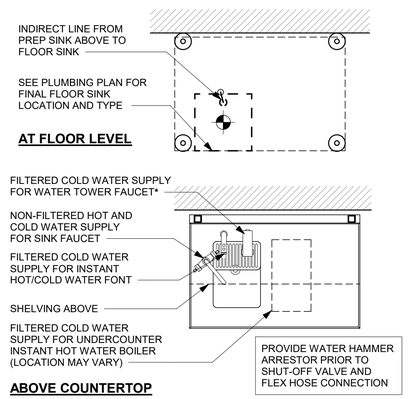

5 WATER FILLING STATION - PLUMBING

Scale: 3/4" = 1'-0"

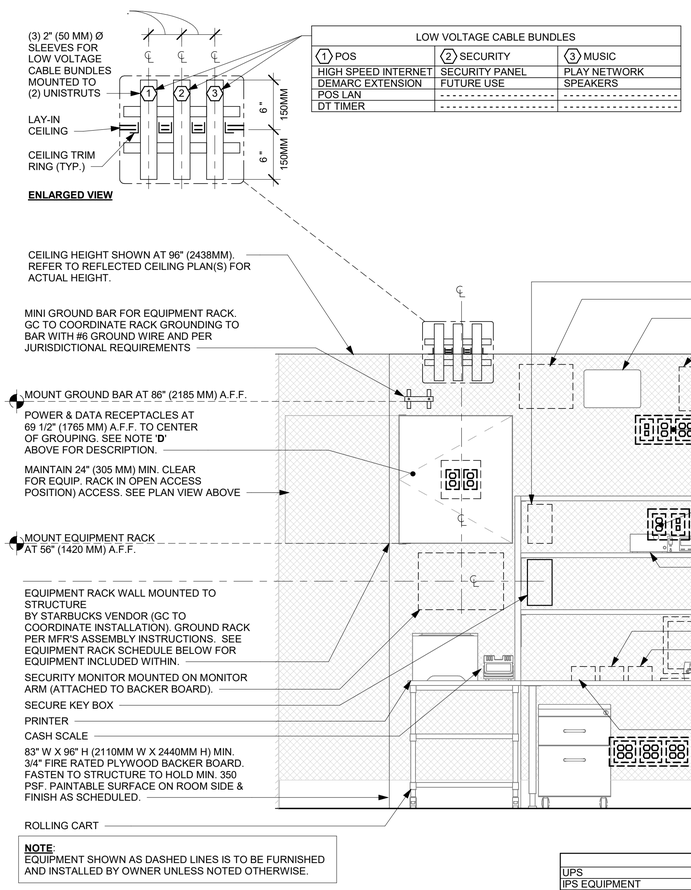

LOW VOLTAGE CABLE BUNDLES		
1 POS	2 SECURITY	3 MUSIC
HIGH SPEED INTERNET	SECURITY PANEL	PLAY NETWORK
DEMARC EXTENSION	FUTURE USE	SPEAKERS
POS LAN	----------	----------
DT TIMER	----------	----------

EQUIPMENT RACK SCHEDULE		
UPS	NETWORK SWITCH	SECURITY RECORDER (NVR)
IPS EQUIPMENT	PATCH PANEL	SECURITY KEYBOARD
ROUTER	PRODUCTION CONTROLLER DEVICES	

8 MANAGER WORKROOM - ELECTRICAL

Scale: 3/4" = 1'-0"

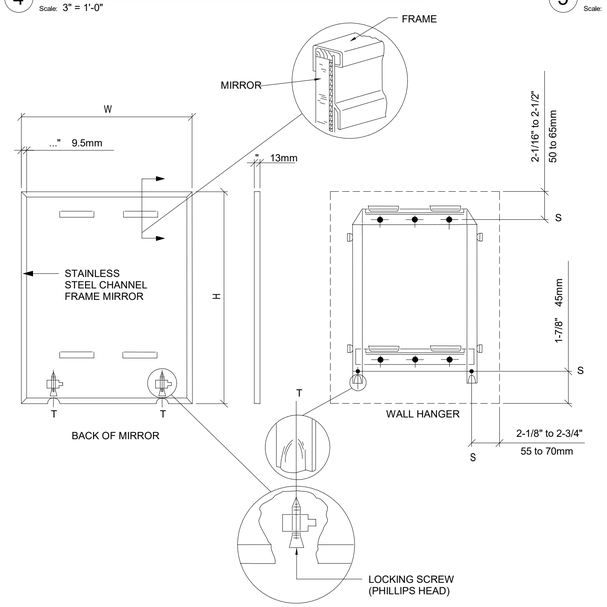

6 MIRROR MOUNTING

Scale: 3/4" = 1'-0"

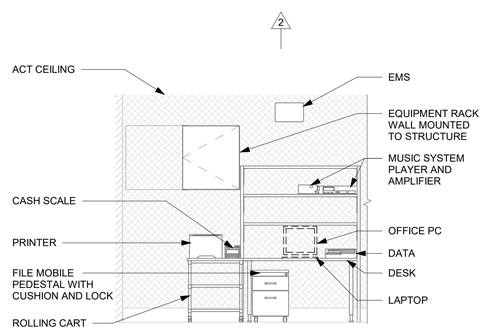

7 MANAGER DESK (DETAIL FOR INSTALLATION)

Scale: 3/8" = 1'-0"

FOR CONSTRUCTION

© 2019 STARBUCKS COFFEE COMPANY

STARBUCKS®
2401 UTAH AVENUE SOUTH
SEATTLE, WASHINGTON 98134
(206) 318-1575

THESE DRAWINGS AND THE PROJECT MANUAL ARE CONFIDENTIAL AND SHALL REMAIN THE SOLE PROPERTY OF STARBUCKS CORPORATION, WHICH IS THE OWNER OF THE COPYRIGHT IN THIS WORK. THEY SHALL NOT BE REPRODUCED (IN WHOLE OR IN PART), SHARED WITH THIRD PARTIES OR USED IN ANY MANNER ON OTHER PROJECTS OR EXTENSIONS TO THIS PROJECT WITHOUT THE PRIOR WRITTEN CONSENT OF STARBUCKS CORPORATION. THESE DRAWINGS AND SPECIFICATIONS ARE INTENDED TO EXPRESS DESIGN INTENT FOR A PROTOTYPICAL STARBUCKS STORE (WHICH IS SUBJECT TO CHANGE AT ANYTIME) AND DO NOT REFLECT ACTUAL SITE CONDITIONS. NEITHER PARTY SHALL HAVE ANY OBLIGATION NOR LIABILITY TO THE OTHER (EXCEPT STATED ABOVE) UNTIL A WRITTEN AGREEMENT IS FULLY EXECUTED BY BOTH PARTIES.

STARBUCKS TEMPLATE VERSION: i2021-09-13

Design Forum Architects Inc.
2056 Byers Rd
Miamisburg, OH 45342
Tel: (844) 804-7700
Donald J. Rethman
Architect In Charge
License: AR0017303

Design Forum Engineering
2056 Byers Rd
Miamisburg, OH 45342
Tel: (844) 804-7700
Timothy L. Raberding, PE
Professional Engineer
License: 62078

PROJECT NAME:
US 98 & GRIFFIN RD

PROJECT ADDRESS:
3105 US-98 NORTH
LAKELAND, FLORIDA 33801

STORE #:	80004
PROJECT #:	96892-001
ISSUE DATE:	2025-10-10
DESIGNER:	ASHLEY SUEIRAS
PRODUCTION DESIGNER:	ANDY MCLOUD
CHECKED BY:	DONALD RETHMAN

Revision Schedule

Rev	Date	By	Description
2	08/26/25		REV-2

SHEET TITLE:
RESTROOM AND WORKROOM DETAILS
SCALE: AS SHOWN

SHEET NUMBER:
A-505

10/9/2025 9:53:44 AM C:\Users\julia.gray\Documents\96892-001_80004_US 98 & Griffin Rd, FL_2025_Julia.grayFRYY6.rvt

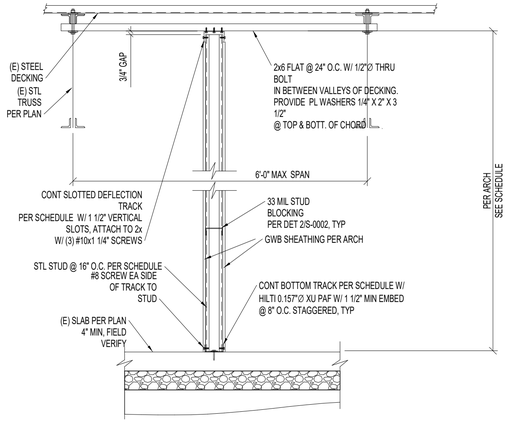

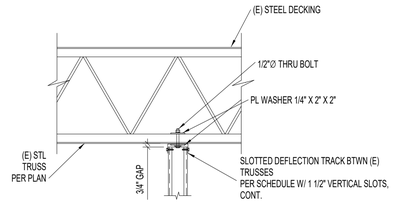

WALL PERPEND TO (E) STL TRUSS

PARTITION WALL SCHEDULE					
WALL HEIGHT	STUD SIZE	DEFL TRACK	DEFL TRACK SPANNING BTWN (E) JOISTS		BOT TRACK
15 FEET	362S137-33	33 MIL	JST @ 4' O.C.	54 MIL	33 MIL
			JST @ 6' O.C.	68 MIL	
20 FEET	550S162-33	33 MIL	JST @ 4' O.C.	68 MIL	33 MIL
			JST @ 6' O.C.	97 MIL	
25 FEET	600S200-43	43 MIL	JST @ 4' O.C.	68 MIL	33 MIL
			JST @ 6' O.C.	97 MIL	

1 TYP MTL STUD PARTITION WALL

Scale: 3/4" = 1'-0"

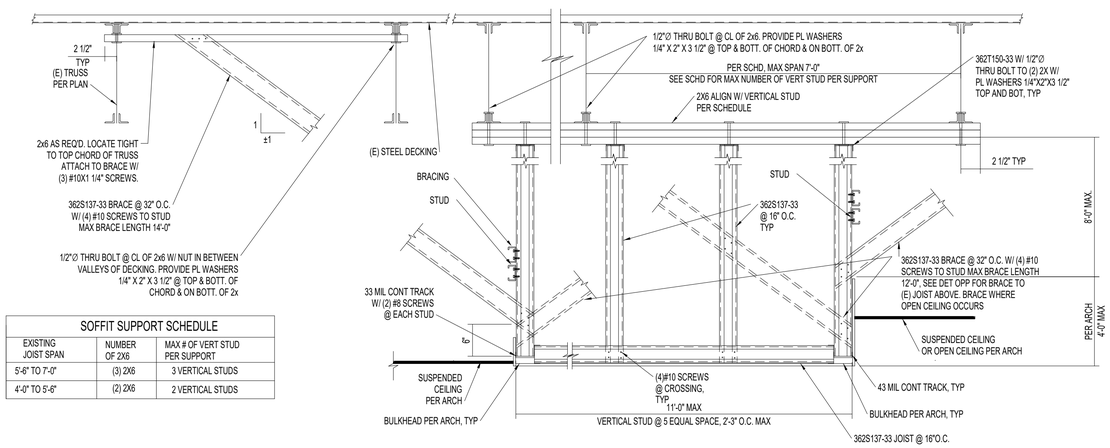

SOFFIT SUPPORT SCHEDULE		
EXISTING JOIST SPAN	NUMBER OF 2X6	MAX # OF VERT STUD PER SUPPORT
5'-8" TO 7'-0"	(3) 2X6	3 VERTICAL STUDS
4'-0" TO 5'-8"	(2) 2X6	2 VERTICAL STUDS

2 TYPICAL SOFFIT PARALLEL TO (E) TRUSS-A

Scale: 3/4" = 1'-0"

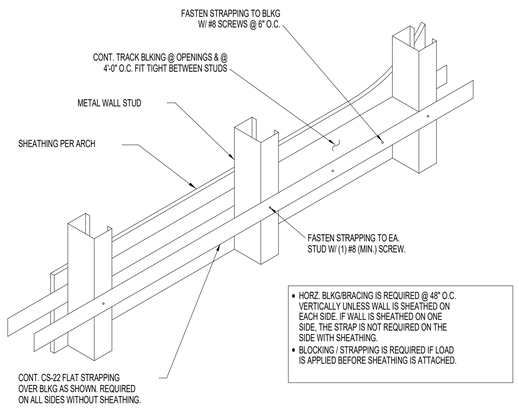

- HORZ. BLKG/BRACING IS REQUIRED @ 48" O.C. VERTICALLY UNLESS WALL IS SHEATHED ON EACH SIDE. IF WALL IS SHEATHED ON ONE SIDE, THE STRAP IS NOT REQUIRED ON THE SIDE WITH SHEATHING.
- BLOCKING / STRAPPING IS REQUIRED IF LOAD IS APPLIED BEFORE SHEATHING IS ATTACHED.

3 TYPICAL WALL BLOCKING_BRACING

Scale: 3/4" = 1'-0"

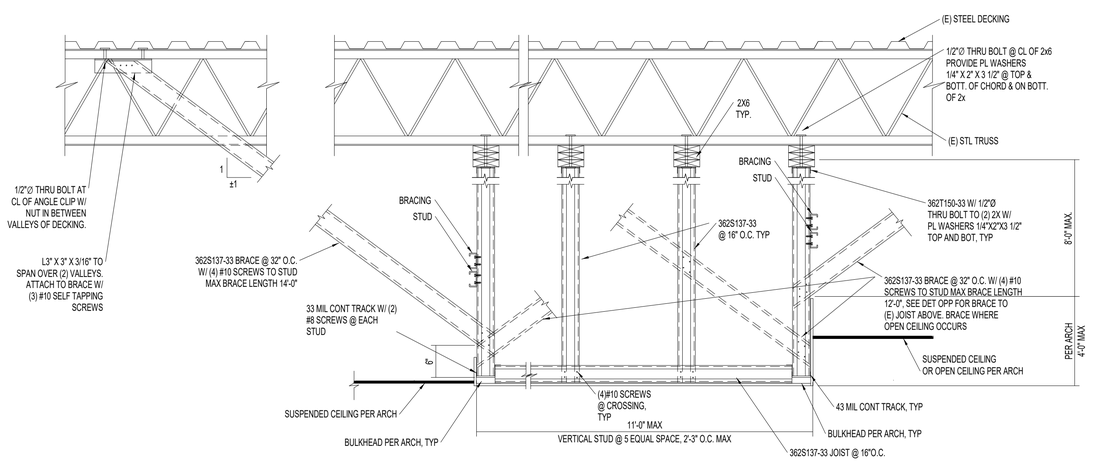

4 TYP SOFFIT PERPENDICULAR TO (E) TRUSS

Scale: 3/4" = 1'-0"

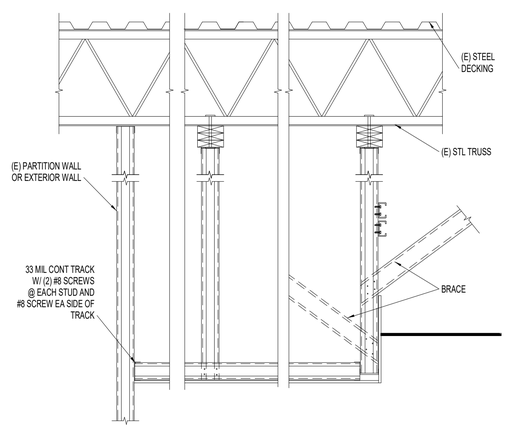

5 TYPICAL SOFFIT TO (E) WALL

Scale: 3/4" = 1'-0"

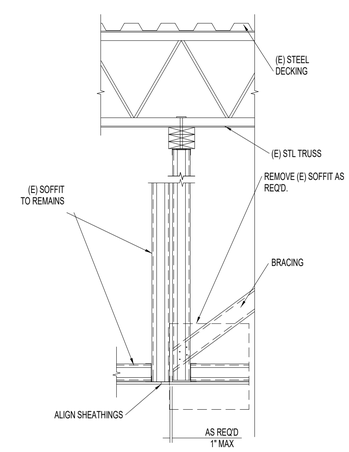

6 NEW SOFFIT TO (E) TRUSS

Scale: 3/4" = 1'-0"

FOR CONSTRUCTION

© 2019 STARBUCKS COFFEE COMPANY

STARBUCKS®
2401 UTAH AVENUE SOUTH
SEATTLE, WASHINGTON 98134
(206) 318-1575

THESE DRAWINGS AND THE PROJECT MANUAL ARE CONFIDENTIAL AND SHALL REMAIN THE SOLE PROPERTY OF STARBUCKS CORPORATION, WHICH IS THE OWNER OF THE COPYRIGHT IN THIS WORK. THEY SHALL NOT BE REPRODUCED (IN WHOLE OR IN PART), SHARED WITH THIRD PARTIES OR USED IN ANY MANNER ON OTHER PROJECTS OR EXTENSIONS TO THIS PROJECT WITHOUT THE PRIOR WRITTEN CONSENT OF STARBUCKS CORPORATION. THESE DRAWINGS AND SPECIFICATIONS ARE INTENDED TO EXPRESS DESIGN INTENT FOR A PROTOTYPICAL STARBUCKS STORE (WHICH IS SUBJECT TO CHANGE AT ANYTIME) AND DO NOT REFLECT ACTUAL SITE CONDITIONS. NEITHER PARTY SHALL HAVE ANY OBLIGATION NOR LIABILITY TO THE OTHER (EXCEPT STATED ABOVE) UNTIL A WRITTEN AGREEMENT IS FULLY EXECUTED BY BOTH PARTIES.

STARBUCKS TEMPLATE VERSION: i2021-09-13

Design Forum Architects Inc.
2056 Byers Rd
Miamisburg, OH 45342
Tel: (844) 804-7700
Donald J. Rethman
Architect In Charge
License: AR0017303

Design Forum Engineering
2056 Byers Rd
Miamisburg, OH 45342
Tel: (844) 804-7700
Timothy L. Raberding, PE
Professional Engineer
License: 62078

PROJECT NAME:
US 98 & GRIFFIN RD

PROJECT ADDRESS:
3105 US-98 NORTH
LAKELAND, FLORIDA 33801

STORE #:	80004
PROJECT #:	96892-001
ISSUE DATE:	2025-10-10
DESIGNER:	ASHLEY SUEIRAS
PRODUCTION DESIGNER:	ANDY MCLOUD
CHECKED BY:	DONALD RETHMAN

Revision Schedule

Rev	Date	By	Description

SHEET TITLE:
CONNECTION DETAILS

SCALE: 3/4" = 1'-0"

SHEET NUMBER:
A-506

10/9/2025 9:53:45 AM C:\Users\julia.gray\Documents\96892-001_80004_US 98 & Griffin Rd, FL_2025_Julia.gravFRYY6.rvt

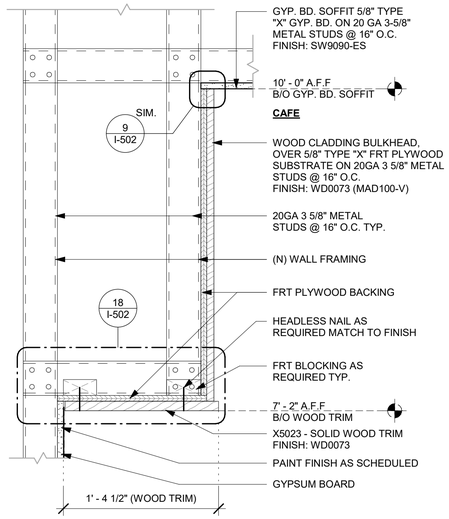

1 HEADER DETAIL AT MERCH
Scale: 1 1/2" = 1'-0"

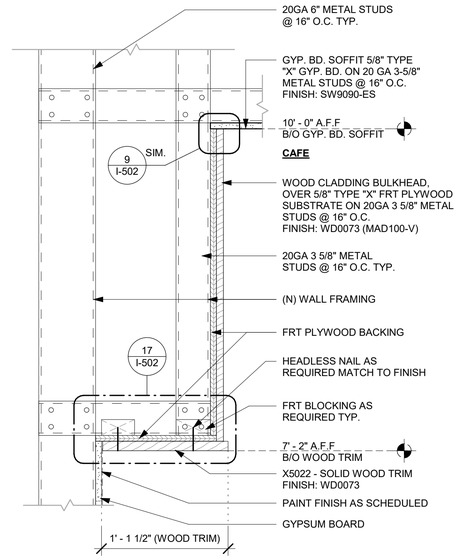

2 HEADER DETAIL AT SIDE MERCH
Scale: 1 1/2" = 1'-0"

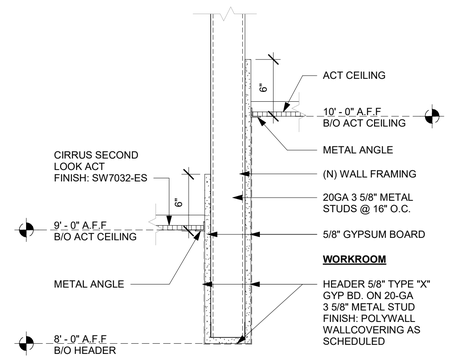

3 HEADER AT WORKROOM
Scale: 1 1/2" = 1'-0"

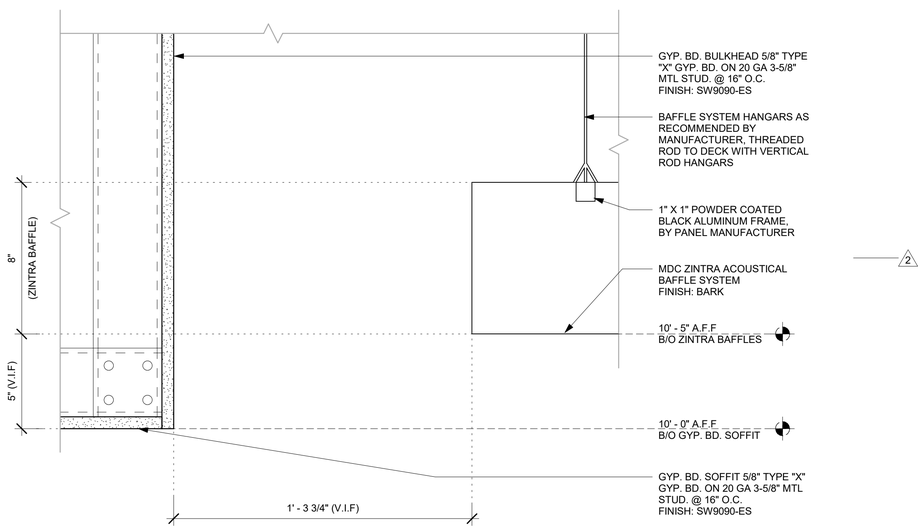

4 DETAIL - ZINTRA BAFFLE AT SOFFIT
Scale: 3" = 1'-0"

FOR CONSTRUCTION

© 2019 STARBUCKS COFFEE COMPANY

STARBUCKS®
2401 UTAH AVENUE SOUTH
SEATTLE, WASHINGTON 98134
(206) 318-1575

THESE DRAWINGS AND THE PROJECT MANUAL ARE CONFIDENTIAL AND SHALL REMAIN THE SOLE PROPERTY OF STARBUCKS CORPORATION, WHICH IS THE OWNER OF THE COPYRIGHT IN THIS WORK. THEY SHALL NOT BE REPRODUCED (IN WHOLE OR IN PART), SHARED WITH THIRD PARTIES OR USED IN ANY MANNER ON OTHER PROJECTS OR EXTENSIONS TO THIS PROJECT WITHOUT THE PRIOR WRITTEN CONSENT OF STARBUCKS CORPORATION. THESE DRAWINGS AND SPECIFICATIONS ARE INTENDED TO EXPRESS DESIGN INTENT FOR A PROTOTYPICAL STARBUCKS STORE (WHICH IS SUBJECT TO CHANGE AT ANYTIME) AND DO NOT REFLECT ACTUAL SITE CONDITIONS. NEITHER PARTY SHALL HAVE ANY OBLIGATION NOR LIABILITY TO THE OTHER (EXCEPT STATED ABOVE) UNTIL A WRITTEN AGREEMENT IS FULLY EXECUTED BY BOTH PARTIES.

STARBUCKS TEMPLATE VERSION: i2021-09-13

Design Forum Architects Inc.
2056 Byers Rd
Miamisburg, OH 45342
Tel: (844) 804-7700
Donald J. Rethman
Architect In Charge
License: AR0017303

Design Forum Engineering
2056 Byers Rd
Miamisburg, OH 45342
Tel: (844) 804-7700
Timothy L. Raberding, PE
Professional Engineer
License: 62078

PROJECT NAME:
US 98 & GRIFFIN RD

PROJECT ADDRESS:
3105 US-98 NORTH
LAKELAND, FLORIDA 33801

STORE #:	80004
PROJECT #:	96892-001
ISSUE DATE:	2025-10-10
DESIGNER:	ASHLEY SUEIRAS
PRODUCTION DESIGNER:	ANDY MCLOUD
CHECKED BY:	DONALD RETHMAN

Revision Schedule

Rev	Date	By	Description
2	08/26/25		REV-2

SHEET TITLE:
BUILDING DETAILS

SCALE: AS SHOWN

SHEET NUMBER:
A-507

10/9/2025 9:53:45 AM C:\Users\julia.gray\Documents\96892-001_80004_US 98 & Griffin Rd, FL_2025_Julia.grayFRYY6.rvt

DOOR LEGEND

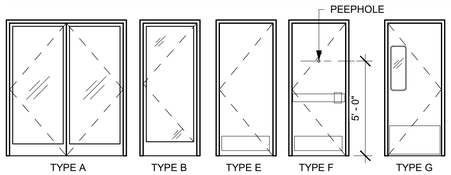

STOREFRONT DOOR (TYPE A)

DOOR HARDWARE SET NO. 3-A - For pair aluminum main entry/exit doors (300 or less occupancy)

No.	Item	Description	Manufacturer	Finish
6	Hanging Devices	TH2314/MPB91	McKinney	630
1	Securing Devices (active leaf)	MS1850S Deadbolt	Adams RIte	626
1	Securing Devices (inactive...	MS1880 Two-Point Flushbolt	Adams Rite	626
2	Securing Devices (active leaf)	C607 7-Pin Core Combinated "A" Keyway	Falcon Lock	626
1	Securing Devices (active leaf)	KB609-2 Cut Control Key "A" Keyway	Falcon Lock	---
9	Securing Devices (active leaf)	KB632-2 Cut User Key "A" Keyway	Falcon Lock	---
2	Securing Devices (active leaf)	C987 7-Pin Mortise Cylinder Housing w/AR Cam	Falcon Lock	626
2	Securing Devices (active leaf)	A08794-003 Adjustable Ring, Mortise Cyl. 5/16-13/32	Falcon Lock	626
2	Operating Trim	108 Door Pull Handle	Rockwood	630
2	Operating Trim	48 Push Bar x 31	Rockwood	630
2	Closing Devices	8916 Door Closer 8916 AF89P AL	Dorma	689
2	Stops and Holders	473 Door Stop w/Hook	Rockwood	626
2	Accessories	Door Sweep 18062CNB36	Pemko	A
1	Threshold	325 Half Saddle Threshold	National Guard	---
1	Sign	Vinyl Sign: "THIS DOOR MUST REMAIN UNLOCKED WHEN BUILDING IS OCCUPIED"	Seton	---

STOREFRONT DOOR (TYPE B)

DOOR HARDWARE SET NO. 2-A - For new single aluminum secondary entry/exit door (50 or more occupancy)

No.	Item	Description	Manufacturer	Finish
3	Hanging Devices	TH2314/MPB91	McKinney	630
1	Securing Devices	CD35A-NL-OP Panic Device	Von Duprin	628/630
2	Securing Devices	C607 7-Pin Core Combinated "A" Keyway	Falcon Lock	626
1	Securing Devices	KB609-2 Cut Control Key "A" Keyway	Falcon Lock	---
9	Securing Devices	KB632-2 Cut User Key "A" Keyway	Falcon Lock	----
1	Securing Devices	C953 7-Pin Rim Cylinder Housing	Falcon Lock	626
1	Securing Devices	C987 7-Pin Mortise Cylinder Housing w/AR Cam	Falcon Lock	626
1	Securing Devices	A08794-003 Adjustable Ring, Mortise Cyl. 516-13/32	Falcon Lock	626
1	Operating Trim	108 Door Pull Handle	Rockwood	630
1	Closing Devices	8916 Door Closer 8916 AF89P	Dorma	689
1	Stops and Holders	473 Door Stop w/ Hook	Rockwood	626
1	Threshold	325 Half Saddle Threshold	National Guard	---
1	Sign	Vinyl Sign: "THIS DOOR MUST REMAIN UNLOCKED WHEN BUILDING IS OCCUPIED"	Seton	---

RESTROOM DOOR (TYPE E)

DOOR HARDWARE SET NO. 6 - For restroom door with lever and privacy lock

No.	Item	Description	Manufacturer	Finish
3	Hanging Items	TA2714/MPB79 Hinge MacPro Bearing 4.5 x 4.5	McKinney	626
1	Securing Devices	PB5425LN Lock, Shallow Coin Turn, Privacy PB5425LN-693-497 1-3/4	Yale Lock	626
1	Closing Devices	8916 Door Closer 8916 AF89P	Dorma	689
2	Protective Trim Units	K1050 B4E Kickplate 8" x 34" Each Side 32D	Rockwood	630
3	Accessories	GJ64 Rubber Silencer	Glynn Johnson	Gray
1	Stops and Holders	473 Door Stop w/ Hook	Rockwood	626

SERVICE DOOR (TYPE F)

DOOR HARDWARE SET NO. 42 - For exterior 42" wide service door

No.	Item	Description	Manufacturer	Finish
3	Hanging Devices	TH2314/MPB91 Hinge MacPro Bearing 4.5 x 4.5	McKinney	630
1	Securing Devices	C607 7-Pin Core Combinated "A" Keyway	Falcon Lock	626
1	Securing Devices	I/O 2000L-03IC Auto Locking Door Alarm, IC; No CTR Includes Mortise Cylinder	Sur-Lock	---
1	Closing Devices	8916 Door Closer 8916 AF89P	Dorma	689
1	Protective Trim Units	K1050 B4E Kickplate 10" x 40"	Rockwood	630
1	Accessories	137NA Weather Strip 20' 42" x 84"	National Guard	A
1	Accessories	Door Sweep 18062CNB36	Pemko	A
1	Miscellaneous Items	DS / 1000 Door Scope	Security Products	Silver
1	Miscellaneous Items	MCV309NWHGL Door Bell	Nutone	As Selected

WORKROOM DOOR (TYPE G)

DOOR HARDWARE SET NO. 11 - For workroom door at backbar

No.	Item	Description	Manufacturer	Finish
1	Traffic Door Package	SCP8 36" x 84"	Eliason	As Selected

INTERIOR DOOR SCHEDULE - "D"

DESIGN ID	COUNT	DESCRIPTION	FURN. BY	INST. BY	COMMENTS
DOOR					
10086	1	DOOR - SINGLE IMPACT DOUBLE ACTING - 36IN 915MM - TYPE G	SB	GC	ELIASON; SEE HARDWARE SET # 11; DOOR TYPE G; HOLLOW METAL DOOR, DOOR FINISH: PL0019; FRAME FINISH: MT0028
10190	2	DOOR - SINGLE FLUSH - 36IN - TYPE E	SB	GC	DOOR FINISH: WD0073 (STAIN TO MATCH), FRAME FINISH: SW7020-SG LOCKNET; SEE HARDWARE SET #6, DOOR TYPE E
X2001	1	DOOR - STOREFRONT METAL FRAME SINGLE - TYPE B	EXIST	EXIST	DOOR; LOCKNET; DOOR FINISH: CLEAR GLASS; FRAME FINISH: DARK BRONZE ALUMINIUM; SEE HARDWARE SET # 2-A, DOOR TYPE B
X2002	1	DOOR - STOREFRONT METAL FRAME DOUBLE - TYPE A	EXIST	EXIST	DOOR; LOCKNET; DOOR FINISH: CLEAR GLASS; FRAME FINISH: DARK BRONZE ALUMINIUM; SEE HARDWARE SET # 3-A, DOOR TYPE A
X2003	1	DOOR - SINGLE FLUSH - SERVICE DOOR - 42IN - TYPE F	EXIST	EXIST	LOCKNET; SEE HARDWARE SET # 42, DOOR TYPE F

WINDOW SCHEDULE - "W"

DESIGN ID	COUNT	DESCRIPTION	FURN. BY	INST. BY	COMMENTS
WINDOW					
10118	1	WINDOW - DT HURRICANE RATED - 48X44IN 1205X1105MM - ALUMINUM	EXIST	EXIST	LL TO SPECIFY IMPACT GLASS OR NON-IMPACT GLASS AS REQUIRED. CONTACT DAN RADEK AT dan@ready-access.com 1-800-621-5045

RESPONSIBILITY LEGEND

FURN. BY	INST. BY
SB - FURNISHED BY STARBUCKS	GC - INSTALLED BY GENERAL CONTRACTOR
GC - FURNISHED BY GENERAL CONTRACTOR	SB - INSTALLED BY STARBUCKS
VD - FURNISHED BY VENDOR	VD - INSTALLED BY VENDOR

NOTE: ALL RESPONSIBILITIES TO BE CONFIRMED WITH STARBUCKS CONSTRUCTION MANAGER PRIOR TO ORDERING / CONSTRUCTION.

GENERAL NOTES

A. STARBUCKS VENDOR TO PROVIDE DOOR HARDWARE COMPONENTS. GC TO INSTALL.

B. SEE SHEET A101 FOR TAGGED LOCATION OF EXTERIOR DOORS AND WINDOWS.

C. EGRESS SHALL NOT PASS THROUGH KITCHENS, STORAGE ROOMS, CLOSETS OR SIMILAR SPACES. (1014.2)

D. PANIC AND FIRE EXIT HARDWARE, WHERE INSTALLED ON DOORS IN THIS BUILDING SHALL SATISFY THE FOLLOWING (1008.1.10):

a) THE ACTUATION PORTION OF THE RELEASING DEVICE SHALL EXTEND AT LEAST ONE-HALF OF THE DOOR LEAF WIDTH.

b) THE MAXIMUM UNLATCHING FORCE DOES NOT EXCEED 15 POUNDS (6.8 KG).

c) PIVOTED OR BALANCED DOORS SHALL BE OF THE PUSH-PAD TYPE WHERE PANIC HARDWARE IS REQUIRED AND THE PAD SHALL NOT EXTEND ACROSS MORE THAN ONE-HALF OF THE DOOR WIDTH, MEASURED FROM THE LATCH SIDE.

d) PANIC HARDWARE LISTED IN ACCORDANCE WITH UL 305.

e) FIRE EXIT HARDWARE LISTED IN ACCORDANCE WITH UL 10C AND UL 305.

FOR CONSTRUCTION

© 2019 STARBUCKS COFFEE COMPANY

STARBUCKS®
2401 UTAH AVENUE SOUTH
SEATTLE, WASHINGTON 98134
(206) 318-1575

THESE DRAWINGS AND THE PROJECT MANUAL ARE CONFIDENTIAL AND SHALL REMAIN THE SOLE PROPERTY OF STARBUCKS CORPORATION, WHICH IS THE OWNER OF THE COPYRIGHT IN THIS WORK. THEY SHALL NOT BE REPRODUCED (IN WHOLE OR IN PART), SHARED WITH THIRD PARTIES OR USED IN ANY MANNER ON OTHER PROJECTS OR EXTENSIONS TO THIS PROJECT WITHOUT THE PRIOR WRITTEN CONSENT OF STARBUCKS CORPORATION. THESE DRAWINGS AND SPECIFICATIONS ARE INTENDED TO EXPRESS DESIGN INTENT FOR A PROTOTYPICAL STARBUCKS STORE (WHICH IS SUBJECT TO CHANGE AT ANYTIME) AND DO NOT REFLECT ACTUAL SITE CONDITIONS. NEITHER PARTY SHALL HAVE ANY OBLIGATION NOR LIABILITY TO THE OTHER (EXCEPT STATED ABOVE) UNTIL A WRITTEN AGREEMENT IS FULLY EXECUTED BY BOTH PARTIES.

STARBUCKS TEMPLATE VERSION: i2021-09-13

Design Forum Architects Inc.
2056 Byers Rd
Miamisburg, OH 45342
Tel: (844) 804-7700
Donald J. Rethman
Architect In Charge
License: AR0017303

Design Forum Engineering
2056 Byers Rd
Miamisburg, OH 45342
Tel: (844) 804-7700
Timothy L. Raberding, PE
Professional Engineer
License: 62078

PROJECT NAME:
US 98 & GRIFFIN RD

PROJECT ADDRESS:
3105 US-98 NORTH
LAKELAND, FLORIDA 33801

STORE #:	80004
PROJECT #:	96892-001
ISSUE DATE:	2025-10-10
DESIGNER:	ASHLEY SUEIRAS
PRODUCTION DESIGNER:	ANDY MCLOUD
CHECKED BY:	DONALD RETHMAN

Revision Schedule

Rev	Date	By	Description

SHEET TITLE:
WINDOW AND DOOR SCHEDULES
SCALE: NO SCALE

SHEET NUMBER:
A-601

10/9/2025 9:53:47 AM C:\Users\julia.gray\Documents\96892-001_80004_US 98 & Griffin Rd, FL_2025_Julia.grayFRYY6.rvt

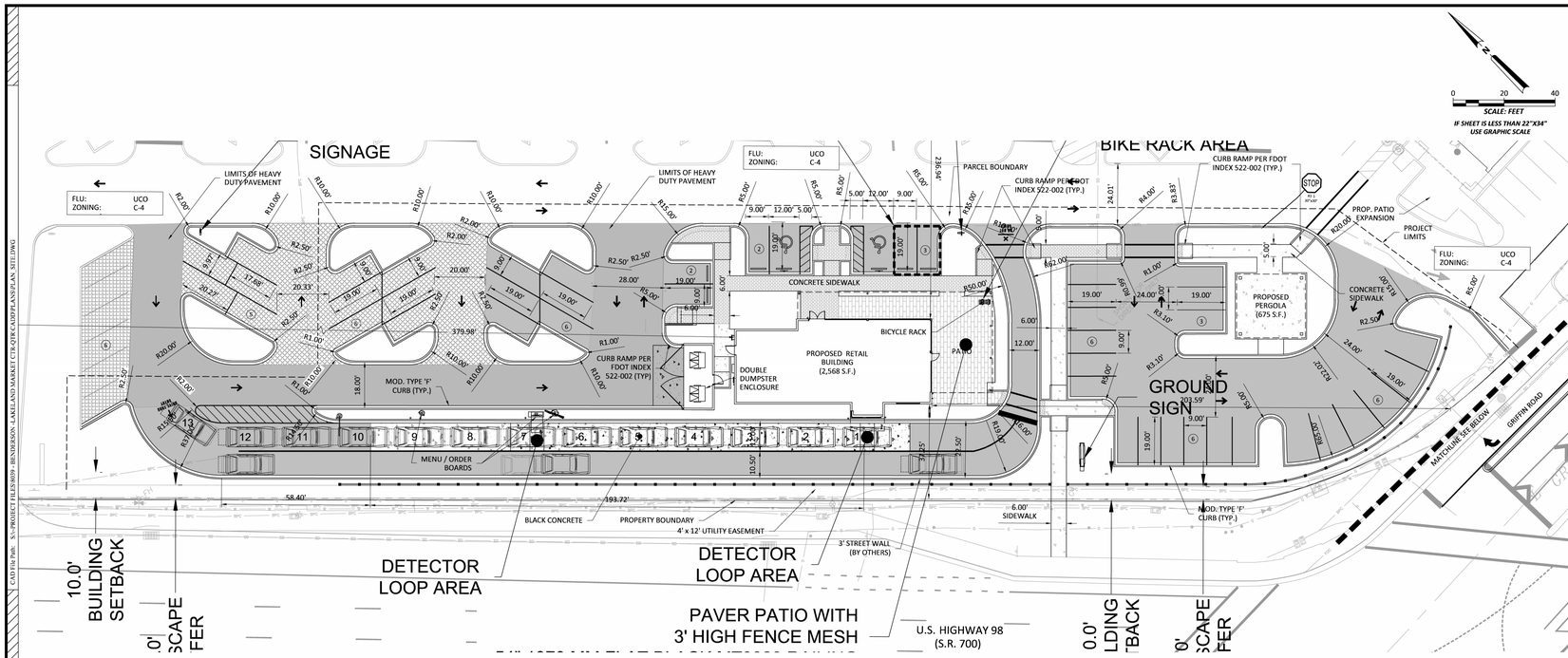

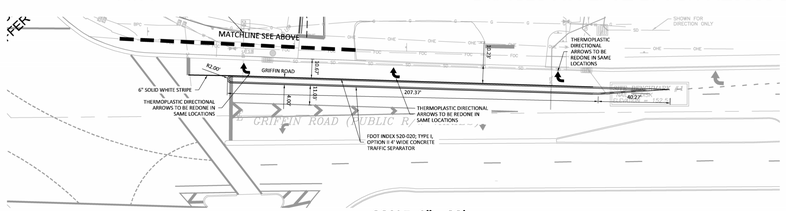

SCALE: 1" = 30'

BLACK CONCRETE PAVEMENT	NEW ASPHALT PAVEMENT
MILL AND OVERLAY EXISTING PAVEMENT	HEAVY DUTY ASPHALT PAVEMENT

PROPOSED SITE DATA TABLE

PARCEL I.D.:	23-28-01-000000-031060 23-28-01-017000-000101	
PARCEL AREA: PROJECT LIMITS:	10.26 ACRES (2 PARCELS) 1.23 ACRES	
FLOOD ZONE:	ZONES X PER FIMA MAP 50007C0252D, EFFECTIVE JULY 18, 2011.	
EXISTING ZONING:	C-4 (COMMERCIAL)	
EXISTING LAND USE:	COMMERCIAL	
PROPOSED LAND USE:	COMMERCIAL	
MAX BUILDING HEIGHT:	44'	
PROJECT LIMITS AREAS		
EXISTING		
PROPERTY AREA	1.23 AC.	100%
BUILDING AREA:	0.00 AC.	0%
TOTAL IMPERVIOUS AREA:	0.62 AC.	50%
TOTAL OPEN SPACE:	0.61 AC.	50%
PROPOSED:		
PROPERTY AREA	1.23 AC	100%
BUILDING AREA:	0.06 AC.	5%
TOTAL IMPERVIOUS AREA:	0.81 AC.	65%
TOTAL OPEN SPACE:	0.42 AC.	35%

FRONT SETBACK (U.S. 98):	Min.10ft. Max. 75ft.	Provided	±33.04
SIDE SETBACK (EAST):	10 ft.	Provided	±242.8
SIDE SETBACK (GRIFFEN ROAD):	10 ft.	Provided	±198.2
REAR SETBACK (NORTH):	25 ft.	Provided	±379.6

REQUIRED PARKING:
HIGH TURNOVER RESTAURANT 3 SPACES
1 PER 66 S.F. OF GFA

2,568 / 66 = 40 SPACES REQUIRED

VEHICULAR PARKING REQUIRED:	VEHICULAR PARKING PROVIDED:
38 PARKING SPACES	51 PARKING SPACES
2 HANDICAP SPACES	2 HANDICAP SPACES
40 TOTAL SPACES	53 TOTAL SPACES
BICYCLE PARKING REQUIRED:	BICYCLE PARKING PROVIDED:
3 SPACES	3 SPACES

LANDSCAPE BUFFERS
NORTH: N/A
EAST: N/A
SOUTH: N/A
WEST: N/A

PARKING PROVIDED
55 PARKING SPACES PROVIDED (2-HANDICAP)

REVISIONS
08-26-24 MODIFICATIONS PER LATEST CITY LAYOUT

Engineering ~ Environmental
Water Resource ~ Survey
6260 W. Linebaugh Ave.
Tampa, Florida 33624
7978 Cooper Creek Blvd
University Park, Florida 34201
www.wrasurveying.com
CA 0000765 LB 6574
Phone: 813.265.3130 941.275.9721

SITE PLAN

LAKELAND MARKET CENTER QTR

ISSUED FOR: PERMITTING
ISSUE DATE: 10-9-2025 SEE-09 TNN-00 RNG-09 DESIGNED:GW DRAWN:GW APPROVED:RR

CHRISTOPHER LICENSE NO. 69159 STATE OF FLORIDA PROFESSIONAL ENGINEER

Datum: -

C-100

S:\~PROJECT FILES\8039 - Benderson -Lakeland Market Ctr-QTR\CADD\PLANS\Plan_Site.dwg, 3/11/2025 6:56:43 PM, AutoCAD PDF (High Quality Print).pc3

1 LL SITE PLAN

2

FOR CONSTRUCTION

© 2019 STARBUCKS COFFEE COMPANY

STARBUCKS®
2401 UTAH AVENUE SOUTH
SEATTLE, WASHINGTON 98134
(206) 318-1575

THESE DRAWINGS AND THE PROJECT MANUAL ARE CONFIDENTIAL AND SHALL REMAIN THE SOLE PROPERTY OF STARBUCKS CORPORATION, WHICH IS THE OWNER OF THE COPYRIGHT IN THIS WORK. THEY SHALL NOT BE REPRODUCED (IN WHOLE OR IN PART), SHARED WITH THIRD PARTIES OR USED IN ANY MANNER ON OTHER PROJECTS OR EXTENSIONS TO THIS PROJECT WITHOUT THE PRIOR WRITTEN CONSENT OF STARBUCKS CORPORATION. THESE DRAWINGS AND SPECIFICATIONS ARE INTENDED TO EXPRESS DESIGN INTENT FOR A PROTOTYPICAL STARBUCKS STORE (WHICH IS SUBJECT TO CHANGE AT ANYTIME) AND DO NOT REFLECT ACTUAL SITE CONDITIONS. NEITHER PARTY SHALL HAVE ANY OBLIGATION NOR LIABILITY TO THE OTHER (EXCEPT STATED ABOVE) UNTIL A WRITTEN AGREEMENT IS FULLY EXECUTED BY BOTH PARTIES.

STARBUCKS TEMPLATE VERSION: i2021-09-13

Design Forum Architects Inc.
2056 Byers Rd
Miamisburg, OH 45342
Tel: (844) 804-7700
Donald J. Rethman
Architect In Charge
License: AR0017303

Design Forum Engineering
2056 Byers Rd
Miamisburg, OH 45342
Tel: (844) 804-7700
Timothy L. Raberding, PE
Professional Engineer
License: 62078

PROJECT NAME:
US 98 & GRIFFIN RD

PROJECT ADDRESS:
3105 US-98 NORTH
LAKELAND, FLORIDA 33801

STORE #:	80004
PROJECT #:	96892-001
ISSUE DATE:	2025-10-10
DESIGNER:	ASHLEY SUEIRAS
PRODUCTION DESIGNER:	ANDY MCLOUD
CHECKED BY:	DONALD RETHMAN

Revision Schedule

Rev	Date	By	Description
2	08/26/25		REV-2

SHEET TITLE:
LL SITE PLAN

SCALE: NO SCALE

SHEET NUMBER:
SP-001

10/9/2025 9:53:58 AM C:\Users\julia.gray\Documents\96892-001_80004_US 98 & Griffin Rd, FL_2025_Julia.grayFRYY6.rvt

KEYED NOTES

1. INSTALL EXTERIOR FURNITURE AS SHOWN.
2. INSTALL CAFE FURNITURE THROUGHOUT AS SHOWN.
3. LOCATION OF WASTE AND RECYCLE STATION. SEE INTERIOR FINISH ELEVATIONS.
4. DO NOT CAULK TRASH RINGS TO COUNTERTOP.
5. DO NOT BLOCK FOOD CASE INTAKE/ EXHAUST.
6. INSTALL MERCH BAY AS INDICATED. SECURE TO WALL.
7. SAFE LOCATED AT POS CABINET.
8. HAND SINK W/ INTEGRAL SPLASH GUARD.
9. G.C. TO REVERSE HINGE ON U.C. REFRIGERATOR TO LEFT HAND SWING AS SHOWN.
10. INSTALL NITRO EQUIPMENT AS INDICATED.
11. NOT USED.
12. NOT USED.
13. LOCATION OF ALL SWITCHING.
14. PLACE FIRE EXTINGUISHER IN WORKROOM PER FIRE INSPECTOR.
15. REFER TO ENLARGED RESTROOM PLANS AND ELEVATIONS (SHEET I-401) FOR FIXTURE LOCATIONS AND MOUNTING HEIGHTS.
16. MANAGERS DESK. SEE MANAGER'S DESK / EQUIPMENT RACK ELECTRICAL DETAIL FOR ADDITIONAL INFORMATION.
17. VENDOR TO INSTALL WATER FILTRATION SYSTEM PER MANUFACTURER'S REQUIREMENTS. G.C. TO PROVIDE PLUMBING AND ELECTRICAL REQUIREMENTS.
18. WATER HEATER LOCATED ABOVE. SEE PLUMBING DRAWINGS.
19. SECURE LOCKERS TO WALL PER MFGS. RECOMMENDATIONS.
20. EXISTING PATIO RAILING.
21. EXISTING HOSE BIB.
22. ELECTRICAL PANELS. SEE BUILDING FLOOR PENETRATION PLAN ON SHEET A-102 AND ELECTRICAL FOR ADDITIONAL INFORMATION.
23. EXISTING ROOF ACCESS LADDER.
24. EXISTING BIKE RACK.
25. INSTALL BOOSTER PUMP AS INDICATED.
26. INSTALL WATER RECIRCULATION PUMP AS INDICATED.
27. TRASH BINS TO BE ORDERED BY STORE OPERATORS. 2
28. INSTALL PLACEHOLDER MERCH STAND FOR BUSSING STATION AS INDICATED.
29. INSTALL AREA RUG. PROVIDE DOUBLE STICK TAPE FOR THE EDGES/CORNERS.

NOTE :
REFER SHEET I-101.1 FOR DATA DEVICE, FURNITURE, GRAPHICS, PLUMBING FIXTURE, SPECIALITY EQUIPMENT, MECHANICAL EQUIPMENT AND SITE SCHEDULE.

GENERAL NOTES

A. GENERAL CONTRACTOR TO SCHEDULE WITH LOCAL REFRIGERATION CONTRACTOR TO CONDUCT INITIAL FOOD CASE START-UP AND TESTING. FOR LIST OF APPROVED START UP CONTRACTORS, CONTACT PROJECT CONSTRUCTION REPRESENTATIVE.

B. THE SITE IS SERVED BY THE MUNICIPAL WATER AND SEWER SYSTEM UNLESS OTHERWISE NOTED.

C. ALL FLOOR AND WALL JUNCTIONS IN STORAGE AND PREP. AREAS SHALL HAVE A 6" COVED BASE.

D. ALL FOOD STORAGE SHALL BE 6" (150mm) A.F.F.

E. ALL WOOD SURFACES (DOORS, TRIM, SHELVES, CABINETS) SHALL BE SEALED.

F. FLOORS, WALLS AND CEILING FINISHES IN FOOD PREP. AREAS SHALL BE SMOOTH, NON-TOXIC, NON-ABSORBENT, DURABLE AND EASILY CLEANABLE. PAINT SHALL BE WASHABLE AND SEMI-GLOSS OR HIGH-GLOSS FINISH.

G. ALL EQUIPMENT AND INSTALLATION WILL MEET NATIONAL SANITATION FOUNDATION STANDARDS OR EQUIVALENT.

H. ALL EQUIPMENT AND CABINETRY WILL BE FLUSH MOUNTED TO COUNTERS, WALLS OR FLOORS, OR BE RAISED TO ALLOW FOR CLEANING.

I. CONFIRM ALL NECESSARY CLEARANCES PER PRODUCT CUT SHEET REQUIREMENTS FOR ALL EQUIPMENT (E.G. ICE MACHINE).

J. EQUIPMENT UNITS SHALL CONTAIN NO EXPOSED THREADS, EMBELLISHMENTS OR OVERHANGING EDGES THAT SERVE AS PLACES FOR ACCUMULATION OF DUST, DIRT AND DEBRIS.

K. WARMING OVEN(S) SHOWN FOR PERMITTING PURPOSES. INSTALLATION AT STORE OPENING TO BE VERIFIED BY STARBUCKS CONSTRUCTION REPRESENTATIVE.

L. EACH HAND WASHING SINK WILL HAVE A SINGLE SERVICE TOWEL AND SOAP DISPENSER, AND ALL HAND SINKS TO HAVE A COMBINATION FAUCET OR PREMIXING FAUCET.

M. FOR PLUMBING FIXTURES, REFER TO THE PLUMBING DESIGN PLAN. FOR DATA DEVICE SCHEDULE, REFER TO THE ELECTRICAL DESIGN PLAN.

N. SEE ELEVATIONS FOR DISTRIBUTION OF CUP DISPENSERS.

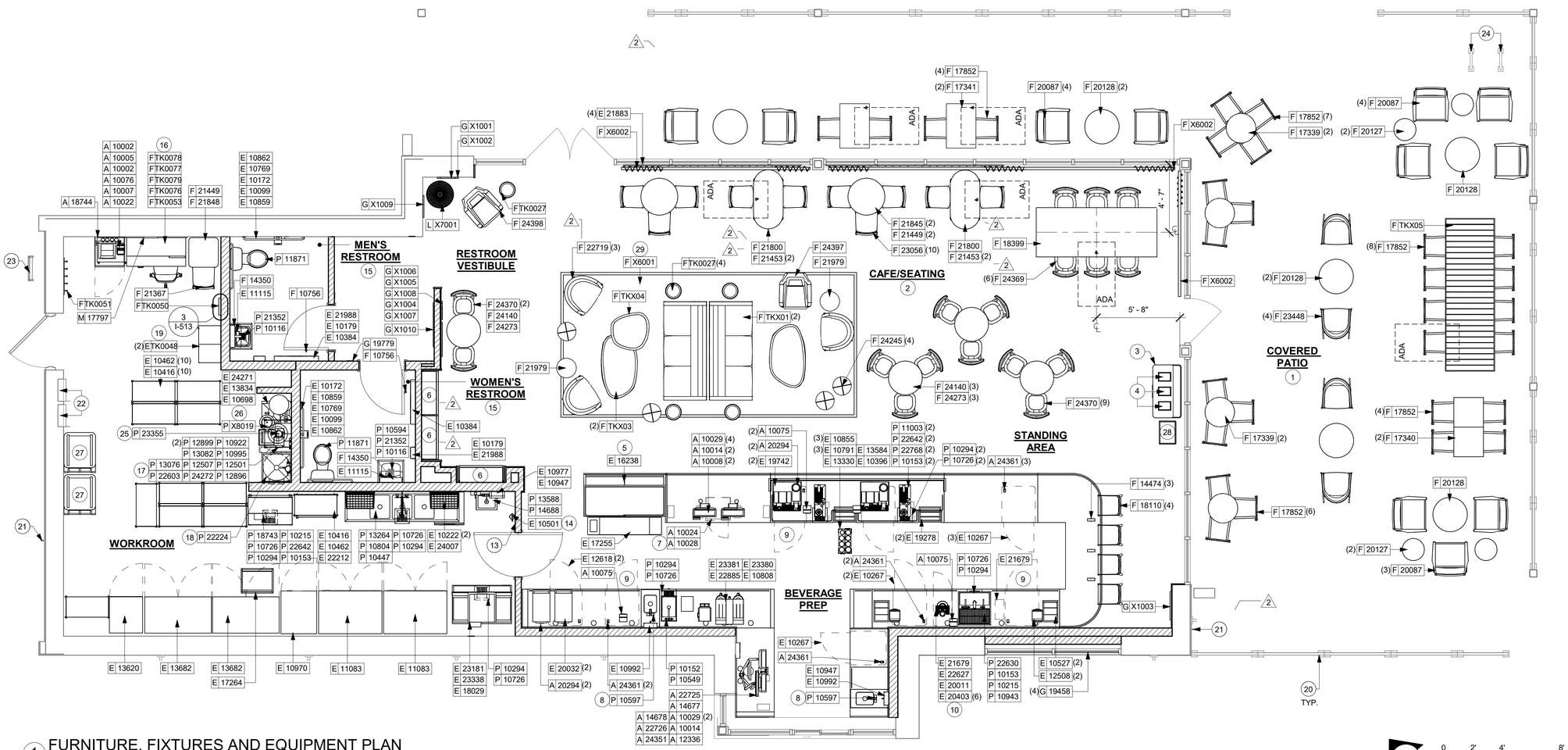

1 FURNITURE, FIXTURES AND EQUIPMENT PLAN
Scale: 1/4" = 1'-0"

N

0 2' 4' 8'
Scale: 1/4" = 1'-0"

FOR CONSTRUCTION

© 2019 STARBUCKS COFFEE COMPANY

STARBUCKS®
2401 UTAH AVENUE SOUTH
SEATTLE, WASHINGTON 98134
(206) 318-1575

THESE DRAWINGS AND THE PROJECT MANUAL ARE CONFIDENTIAL AND SHALL REMAIN THE SOLE PROPERTY OF STARBUCKS CORPORATION, WHICH IS THE OWNER OF THE COPYRIGHT IN THIS WORK. THEY SHALL NOT BE REPRODUCED (IN WHOLE OR IN PART), SHARED WITH THIRD PARTIES OR USED IN ANY MANNER ON OTHER PROJECTS OR EXTENSIONS TO THIS PROJECT WITHOUT THE PRIOR WRITTEN CONSENT OF STARBUCKS CORPORATION. THESE DRAWINGS AND SPECIFICATIONS ARE INTENDED TO EXPRESS DESIGN INTENT FOR A PROTOTYPICAL STARBUCKS STORE (WHICH IS SUBJECT TO CHANGE AT ANYTIME) AND DO NOT REFLECT ACTUAL SITE CONDITIONS. NEITHER PARTY SHALL HAVE ANY OBLIGATION NOR LIABILITY TO THE OTHER (EXCEPT STATED ABOVE) UNTIL A WRITTEN AGREEMENT IS FULLY EXECUTED BY BOTH PARTIES.

STARBUCKS TEMPLATE VERSION: i2021-09-13

Design Forum Architects Inc.
2056 Byers Rd
Miamisburg, OH 45342
Tel: (844) 804-7700
Donald J. Rethman
Architect In Charge
License: AR0017303

Design Forum Engineering
2056 Byers Rd
Miamisburg, OH 45342
Tel: (844) 804-7700
Timothy L. Raberding, PE
Professional Engineer
License: 62078

PROJECT NAME:
US 98 & GRIFFIN RD

PROJECT ADDRESS:
3105 US-98 NORTH
LAKELAND, FLORIDA 33801

STORE #:	80004
PROJECT #:	96892-001
ISSUE DATE:	2025-10-10
DESIGNER:	ASHLEY SUEIRAS
PRODUCTION DESIGNER:	ANDY MCLOUD
CHECKED BY:	DONALD RETHMAN

Revision Schedule

Rev	Date	By	Description
2	08/26/25		REV-2

SHEET TITLE:
FF & E PLAN

SCALE: 1/4" = 1'-0"

SHEET NUMBER:
I-101

10/9/2025 9:54:04 AM C:\Users\julia.gray\Documents\96892-001_80004_US 98 & Griffin Rd, FL_2025_Julia.grayFRYY6.rvt

DATA DEVICE SCHEDULE - "A"

DESIGN ID	COUNT	DESCRIPTION	FURN. BY	INST. BY	COMMENTS
AUDIO VISUAL					
10005	1	MUSIC SYSTEM	SB	VD	
10013	5	DT QUEUE CAMERA	SB	VD	
10017	2	SPEAKER SURFACE MOUNTED	SB	GC	BLACK EXTERIOR
10076	1	AMPLIFIER - 60W	SB	VD	
12336	1	DT TIMER SYSTEM	SB	VD	
19493	3	SPEAKER PENDANT MOUNTED - BLACK	SB	GC	
22725	1	DT DIGITAL PRODUCTION MONITOR	SB	GC	PART OF RETAIL IT EQUIPMENT PACKAGE
2 22726	1	DT POS MONITOR ARM TRIPLE SURFACE MOUNTED	SB	GC	PART OF RETAIL IT EQUIPMENT PACKAGE
24351	1	DT HEADSET COMMUNICATION SYSTEM	SB	GC	
DATA					
10002	1	COMPUTER MANAGER WORKSTATION	SB	VD	
10007	1	PRINTER MANAGER WORKSTATION	SB	VD	
18744	1	EQUIPMENT RACK WITH LOCK - 24IN 610MM	SB	VD	
20294	4	IOT MODULE	SB	GC	
2 24361	8	DIGITAL TEMPERATURE SENSOR	SB	GC	
GRAPHICS - INTERIOR MENU					
22970	3	MENU BOARD - DIGITAL DISPLAY - 44X25.25IN 1121X644MM - BLACK	SB	GC	
22971	3	MENU BOARD - DIGITAL MENU BOARD MOUNTING BRACKET SINGLE SCREEN - BLACK	SB	GC	
POINT OF SALE					
10008	2	POS - REGISTER WITH COMPACT CASH DRAWER	SB	VD	
10014	3	POS PRINTER	SB	GC	
10022	1	MONEY COUNTER	SB	VD	
10029	6	POS BANK	SB	GC	
10075	4	CUP LABELER	SB	GC	
14677	2 1	POS - DT TENDERING REGISTER	SB	GC	PART OF RETAIL IT EQUIPMENT PACKAGE
14678	1	POS - DT EXPEDITOR	SB	GC	PART OF RETAIL IT EQUIPMENT PACKAGE
SECURITY					
10024	1	SAFE LH - 20X18X26IN 510X455X660MM	SB	GC	
10028	1	SAFE BASE	SB	GC	

FURNITURE SCHEDULE - "F"

DESIGN ID	COUNT	DESCRIPTION	FURN. BY	INST. BY	COMMENTS
CHAIR					
17852	29	CHAIR - CAFE PYRAMID - BLACK AND BROWN ROPE MT0028 F0194	SB	GC	
18110	4	CHAIR - STOOL COUNTER HEIGHT JULIE - WHITE OAK WD0073	SB	GC	
20087	11	CHAIR - LOUNGE PYRAMID - BLACK AND BROWN ROPE MT0028 F0194	SB	GC	
21367	1	CHAIR - CAFE PEGGY UPHOLSTERED - WHITE OAK AND CARAMEL BROWN NATURAL WD0073 F0008	SB	GC	
22719	3	CHAIR - LOUNGE MOON - BLACK AND BLACK NATURAL MT0028 F0046	SB	GC	
23056	10	CHAIR - CAFE PEGGY UPHOLSTERED - BLACK OAK AND BLACK NATURAL WD0035 F0046	SB	GC	
23448	4	CHAIR - LOUNGE HANS 2.0 - BLACK	SB	GC	
24245	4	CHAIR - STOOL 18IN 455MM CROSS STITCHED UPHOLSTERED ROUND - BLACK AND CHERRY NATURAL WD0035 F0264	SB	GC	
24369	6	CHAIR - CAFE SADOVE UPHOLSTERED - SAND AND CARAMEL	SB	GC	
24370	11	CHAIR - STOOL BAR HEIGHT SADOVE UPHOLSTERED - SAND AND CARAMEL	SB	GC	
24397	1	CHAIR - LOUNGE LOTTIE - BANKER SADDLE	SB	GC	
24398	1	CHAIR - LOUNGE LOTTIE - LICORICE SIERRA	SB	GC	
TK0077	1	CHAIR - MANAGERS WORKSTATION	SB	GC	2 STEELCASE SERIES ONE ARMLESS
2 DESK					
TK0053	1	DESK - MANAGERS WORKSTATION SHELVES - 48IN 1220MM	SB	GC	
TK0076	1	DESK - MANAGERS WORKSTATION - 48X24X27IN 1220X610X685MM	SB	GC	
MIRROR					
14350	2	MIRROR - RESTROOM ANGLED- 18X36IN 455X915MM	SB	GC	INSTALLED AT CENTER OF (E) SINK, MIN. 40" A.F.F. TO B.O. MIRROR.
TK0050	1	MIRROR - BOH	SB	GC	SEE DETAIL: 3/I-513
OTHER					
10756	2	COAT HOOK 1 PRONG SQUARE - 2IN 50MM - SST	SB	GC	
14474	3	PURSE HOOK FLAT METAL - BLACK MT0028	SB	GC	
TK0051	1	COAT HOOK STRIP - 30IN 760MM	SB	GC	BLACK FINISH
RUG					
X6001	1 2	RUG - GRAPHIC HERRINGBONE CINNAMON BORDER:2',BOLD ETHIC. ' 20' - 0" x 9' - 9"	SB	GC	BY MATTER SURFACES CONTACT: rhusty@mattersurfaces.com 404-710-7357 Mattersurfaces.com
SOFA					
TKX01	2	SOFA - HAMILTON LEATHER - BURNT SIENNA	SB	GC	MADE TO ORDER ITEM, ORDER AHEAD OF TIME
STORAGE					
TK0078	1	FILE MOBILE PEDESTAL WITH CUSHION AND LOCK	SB	GC	

RESPONSIBILITY LEGEND

FURN. BY	INST. BY
SB - FURNISHED BY STARBUCKS	GC - INSTALLED BY GENERAL CONTRACTOR
GC - FURNISHED BY GENERAL CONTRACTOR	SB - INSTALLED BY STARBUCKS
VD - FURNISHED BY VENDOR	VD - INSTALLED BY VENDOR

NOTE: ALL RESPONSIBILITIES TO BE CONFIRMED WITH STARBUCKS CONSTRUCTION MANAGER PRIOR TO ORDERING / CONSTRUCTION.

FURNITURE SCHEDULE - "F"

DESIGN ID	COUNT	DESCRIPTION	FURN. BY	INST. BY	COMMENTS
2 TK0079	1	MANAGERS DESK CART - 24X20IN 610X510MM	SB	GC	
TABLE					
17339	4	TABLE - CAFE METAL PEDESTAL BASE ROUND - 24IN 610MM - BLACK MT0028	SB	GC	
17340	2	TABLE - CAFE METAL PEDESTAL BASE SQUARE - 24IN 610MM - BLACK MT0028	SB	GC	
17341	2	TABLE - ACCESSIBLE METAL WITH TAPERED LEGS - 36X24IN 915X610MM - BLACK MT0028	SB	GC	
18399	1	TABLE - COMMUNITY CAFE HEIGHT ANGLE BASE - 8 SEAT WIDE - WHITE OAK WD0073	SB	GC	
20127	4	TABLE - OCCASIONAL SIDE CAMERON - FLAT BLACK MT0028	SB	GC	EXTERIOR FURNITURE
20128	6	TABLE - OCCASIONAL COFFEE CAMERON - FLAT BLACK MT0028	SB	GC	
21449	3	TABLE - BASE CAFE HEIGHT BOTTLE - FLAT BLACK MT0028	SB	GC	
21453	4	TABLE - BASE ACCESSIBLE BOTTLE - FLAT BLACK MT0028	SB	GC	
21800	2	TABLE - TOP ACCESSIBLE ROUND EDGE OBLONG - 48X24IN 1220X610MM - WHITE OAK WD0073	SB	GC	
21840	1	TABLE - TOP ROUND EDGE ROUND - 24IN 610MM - BLACK WD0035	SB	GC	
21845	2	TABLE - TOP ROUND EDGE ROUND - 30IN 760MM - WHITE OAK WD0073	SB	GC	
21848	1	TABLE - TOP ROUND EDGE SQUARE - 24IN 610MM - WHITE OAK WD0073	SB	GC	
21979	2	TABLE - OCCASIONAL SIDE WING - WHITE OAK WD0073	SB	GC	
24140	4	TABLE - TOP POV CIRCLE - 27.5IN 700MM - OAK STANDARD	SB	GC	TOP AND BASE HAVE SEPARATE DIDS. ORDER 1 BASE PER TOP.
24273	4	TABLE - BASE BAR HEIGHT POV 463 - OAK STANDARD	SB	GC	TOP AND BASE HAVE SEPARATE DIDS. ORDER 1 BASE PER TOP.
TK0027	5	TABLE - OCCASIONAL SIDE COCO	SB	GC	
TKX03	2	TABLE - WEST ELM - ORGANIC MODULAR TABLE - LARGE OAK	SB	GC	SKU: 1867724
TKX04	1	TABLE - ORGANIC MODULAR TABLE - SMALL BLACK ON ASH	SB	GC	SKU 3125173
TKX05	1	PORTSIDE ALUMINIUM OUTDOOR DINING TABLE	SB	GC	SKU 9884205
WINDOW TREATMENT					
22486	22	ROLLER SHADE - DARK BROWN - 5PC OPEN	SB	VD	LENGTH TO ALIGN WITH BOTTOM MULLION; LENGTH REQUIRED: (5) 2' - 11" LENGTH (4) 2' - 8" LENGTH (1) 3' - 0" LENGTH (2) 3' - 8" LENGTH (8) 3' - 2" LENGTH (1) 3' - 3" LENGTH (1) 6' - 0" LENGTH
X6002	3	CURTAIN - FABRIC SOUND ACOUSTICAL DRAPERIES - FIBER 3 MELANGE SELF-LINED CURATIN RODS_KIRSCH RIPPLE FOLD ARCHITRAC RODS CEILING MOUNTED TRACK: BLACK FINISH	SB	VD	VENDOR: SNOW SOUND CONTACT MIKE DARDASHTI +1 310 467 2830 MIKE.D@SNOWSOUNDUSA.COM VENDOR TO SHARE SUBMITTAL FOR DESIGN APPORVAL

GRAPHICS AND ARTWORK SCHEDULE - "G"

DESIGN ID	COUNT	DESCRIPTION	FURN. BY	INST. BY	COMMENTS
GRAPHIC - FILM					
19458	4	INTERIOR WINDOW FILM FASARA - DUSTED CRYSTAL	SB	GC	SIZE REQUIRED: (V.I.F.): (2) 4' - 4" W X 7' - 8" H (2) 4' - 4" W X 1' - 10" H
GRAPHICS - ARTWORK					
2 X1001	1	SBXART_16784 - FRAMED WITH NO MAT - ART SIZE - 10.5" W X 10.5" H ; OVERALL SIZE - 12" W X 12" H EBONY, BLACK WOOD FRAME NON-GLARE ACRYLIC	SB	GC	SEE ELEVATION: 1/I-201
X1002	1	SBXART_17110 - FRAMED WITH MAT - ART SIZE - 11 1/2" W X 8 1/2" H ; OVERALL SIZE - 1'-5" W X 1'-2" H EBONY, BLACK WOOD FRAME 2" MAT NON-GLARE ACRYLIC	SB	GC	SEE ELEVATION: 1/I-201
X1003	1	SBXART_22090 - FRAMED WITH MAT - ART SIZE - 11 1/2" W X 8 1/2" H ; OVERALL SIZE - 1'-11" W X 3'-3" H EBONY, BLACK WOOD FRAME 4" MAT NON-GLARE ACRYLIC	SB	GC	SEE ELEVATION: 2/I-201
X1004	1	SBXART_19149 - FRAMED WITH MAT - ART SIZE - 1'-8 1/2" W X 1'-0 1/2" H ; OVERALL SIZE - 2'-4" W X 1'-8" H EBONY, BLACK WOOD FRAME 4" MAT NON-GLARE ACRYLIC	SB	GC	SEE ELEVATION: 2/I-202
X1005	1	SBXART_16785- FRAMED WITH NO MAT - ART SIZE - 8.5" W X 8.5"H ; OVERALL SIZE - 10" W X 10" H EBONY, BLACK WOOD FRAME NON-GLARE ACRYLIC	SB	GC	SEE ELEVATION: 2/I-202
X1006	1	SBXART_23308- FRAMED WITH NO MAT - ART SIZE - 10.5" W X 7.5" H ; OVERALL SIZE - 12" W X 9" H EBONY, BLACK WOOD FRAME NON-GLARE ACRYLIC	SB	GC	SEE ELEVATION: 2/I-202
X1007	1	SBXART_16782- FRAMED WITH NO MAT - ART SIZE - 8.5" W X 8.5"H ; OVERALL SIZE - 10" W X 10" H EBONY, BLACK WOOD FRAME NON-GLARE ACRYLIC	SB	GC	SEE ELEVATION: 2/I-202
X1008	1	SBXART_16968 - FRAMED WITH MAT - ART SIZE - 9 1/2" W X 13 1/2" H ; OVERALL SIZE - 1'-3" W X 1'-7" H EBONY, BLACK WOOD FRAME 4" MAT NON-GLARE ACRYLIC	SB	GC	SEE ELEVATION: 2/I-202
X1009	1	SBXART_22155 - FRAMED WITH MAT - ART SIZE - 10 1/2" W X 16 1/2" H ; OVERALL SIZE - 18" W X 24" H EBONY, BLACK WOOD FRAME 4" MAT NON-GLARE ACRYLIC	SB	GC	SEE ELEVATION: 2/I-202
X1010	1	COMMUNITY BOARD MAGNETIC WITH 3/4" FRAME: 2A - EBONIZED WALNUT ; OVERALL SIZE: 36" W X 46" H	SB	GC	SEE ELEVATION: 1/I-204
2 X1011	2	SBXART_16784; WRAPPED CANVAS IN FLOAT FRAME; ART SIZE : 21.5" W X 21.5" H; OVERALL SIZE: 23" W X 23" H	SB	GC	SEE ELEVATION: 2/I-205
GRAPHICS - OTHER					
19778	1	RESTROOM SIGN MEN ACCESSIBLE	SB	GC	
19779	1	RESTROOM SIGN WOMEN ACCESSIBLE	SB	GC	

SPECIALTY EQUIPMENT SCHEDULE - "E"

DESIGN ID	COUNT	DESCRIPTION	FURN. BY	INST. BY	COMMENTS
COOLING					
10267	6	FRIDGE UNDERCOUNTER 1 DOOR - 27IN 685MM	SB	GC	
10970	1	FRIDGE REACH IN 1 DOOR LH - 29IN 735MM	SB	GC	
11083	2	FRIDGE REACH IN 2 DOOR - 51X35IN 1295X890MM	SB	GC	
12618	2	FRIDGE UNDERCOUNTER 1 DOOR WITH SHELF - 27IN 685MM	SB	GC	
13620	1	FREEZER REACH IN 1 DOOR LH - 27IN 685MM	SB	GC	
13682	2	FREEZER REACH IN 2 DOOR - 54IN 1370MM	SB	GC	
20011	1	FRIDGE NITRO 2 TAP JT NITCOM RH	SB	GC	KIT INCLUDES UNDERCOUNTER FRIDGE, FONT, TRAY, AND TUBING
EQUIPMENT					
10808	1	GRINDER DITTING KR1203	SB	GC	
12508	2	BLENDER QUIET MODEL ON COUNTER	SB	GC	
19742	2	ESPRESSO MACHINE MASTRENA II	SB	GC	
20032	2	OVEN EIKON E2S - BLACK	SB	GC	
21679	1	NITROGEN GENERATOR ELEMENT COMPACT	SB	GC	
22885	1	BREWER CLOVER VERTICA DOUBLE	SB	GC	
2 23380	1	BREWER CLOVER VERTICA INSTALL KIT	SB	GC	
23381	1	BREWER CLOVER VERTICA CORD	SB	GC	
24007	1	DISHWASHER LXNR ADVANSYS	SB	GC	
FOOD CASE					
16238	1	FOOD CASE - ZEPHYR - 66IN 1675MM	SB	GC	
ICE					
10527	2	ICE - BIN DROP IN 45LB 20KG	SB	GC	
18029	1	ICE - BIN B110	SB	GC	BPF-1 ADAPTER KIT (011076103) REQUIRED WHEN PAIRING WITH 30" (760MM) ICE MACHINES
2 19278	2	ICE - BIN DROP IN 45LB 20KG HORIZONTAL	SB	GC	
23181	1	ICE - MACHINE HMD2110RBT REMOTE COOLED	SB	GC	
23338	1	ICE - BIN ADAPTOR FOLLETT B110H22H30 PEDESTAL TOP FOR B110	SB	GC	
OTHER					
10099	2	RESTROOM TOILET PAPER HOLDER	SB	GC	
10172	2	RESTROOM SEAT COVER DISPENSER	SB	GC	
10179	2	HAND DRYER SURFACE MOUNTED	SB	GC	
10384	2	DIAPER CHANGING STATION HORIZONTAL	SB	GC	
10396	1	CUP DISPENSER SHORT HOT VERTICAL	SB	GC	
10501	1	FIRE EXTINGUISHER	GC	GC	SPEC: MANUFACTURER: PRODUCT PRO 460; PART #21005785; MULTIPURPOSE DRY-CHEMICAL TYPE UL RATED 4-A, 60-B:C, 10LB; METAL STRAP BRACKET PART # 366242
10769	2	RESTROOM GRAB BAR VERTICAL - 18IN 455MM	SB	GC	
10791	3	CUP DISPENSER GRANDE VENTI COLD VERTICAL	SB	GC	
10855	3	CUP DISPENSER GRANDE VENTI HOT VERTICAL	SB	GC	
2 10859	2	RESTROOM GRAB BAR - 48IN 1220MM	SB	GC	
10862	2	RESTROOM GRAB BAR - 36IN 915MM	SB	GC	
10947	3	SOAP DISPENSER WALL MOUNTED	SB	GC	
10977	1	PAPER TOWEL DISPENSER FULL SIZE	SB	GC	
10992	2	PAPER TOWEL DISPENSER HALF SIZE - TRANSLUCENT GRAY	SB	GC	
11115	2	SOAP DISPENSER SINK MOUNTED	SB	GC	
13330	1	MOBILE CUP DISPENSER CADDY	SB	GC	
13584	1	CUP DISPENSER TRENTA COLD VERTICAL	SB	GC	
20403	6	KEG - 3GAL	SB	GC	
21679	1	NITRO 2 TAP FONT JT NITCOM	SB	GC	DO NOT ORDER - INCLUDED IN KIT
21883	4	POWER STRIP - 72IN 1829MM - BLACK			
21988	2	HAND DRYER BACK PANEL	SB	GC	
22627	1	NITRO 2 TAP HANDLE WITH BADGE AND MOUNT KIT	SB	GC	JOE TAP, FOR USE AT BACKBAR NITRO FONT
STORAGE					
10222	2	WIRE SHELF GRID AT SINK	SB	GC	
10416	11	WORKROOM SHELVING - 36IN 915MM	SB	GC	
10462	11	WORKROOM SHELVING POSTS	SB	GC	
10698	1	MOP RACK WITH 3 HOLDERS	SB	GC	
13834	1	BASE - 24X18IN 610X455MM	SB	GC	ITEM PROVIDED BY PENTAIR FOR USE WITH WATER FILTRATON SYSTEM
17255	1	PASTRY TRAY CART - 60IN 1525MM PASTRY TRAY CART - 60IN 1525MM	SB	GC	
17264	1	ROLLING PASTRY TRAY THAW RACK - 20X26IN 510X660MM	SB	GC	
22212	1	WORKROOM SHELVING CART KIT	SB	GC	
24271	1	FILTER - 20 GALLON RO SYSTEM STORAGE TANK SHELF	SB	GC	ITEM PROVIDED BY PENTAIR FOR USE WITH WATER FILTRATON SYSTEM
2 TK0048	2	5 COMP LOCKER - 15IN 380MM	SB	GC	

FOR CONSTRUCTION

© 2019 STARBUCKS COFFEE COMPANY

STARBUCKS®
2401 UTAH AVENUE SOUTH
SEATTLE, WASHINGTON 98134
(206) 318-1575

THESE DRAWINGS AND THE PROJECT MANUAL ARE CONFIDENTIAL AND SHALL REMAIN THE SOLE PROPERTY OF STARBUCKS CORPORATION, WHICH IS THE OWNER OF THE COPYRIGHT IN THIS WORK. THEY SHALL NOT BE REPRODUCED (IN WHOLE OR IN PART), SHARED WITH THIRD PARTIES OR USED IN ANY MANNER ON OTHER PROJECTS OR EXTENSIONS TO THIS PROJECT WITHOUT THE PRIOR WRITTEN CONSENT OF STARBUCKS CORPORATION. THESE DRAWINGS AND SPECIFICATIONS ARE INTENDED TO EXPRESS DESIGN INTENT FOR A PROTOTYPICAL STARBUCKS STORE (WHICH IS SUBJECT TO CHANGE AT ANYTIME) AND DO NOT REFLECT ACTUAL SITE CONDITIONS. NEITHER PARTY SHALL HAVE ANY OBLIGATION NOR LIABILITY TO THE OTHER (EXCEPT STATED ABOVE) UNTIL A WRITTEN AGREEMENT IS FULLY EXECUTED BY BOTH PARTIES.

STARBUCKS TEMPLATE VERSION: i2021-09-13

Design Forum Architects Inc.
2056 Byers Rd
Miamisburg, OH 45342
Tel: (844) 804-7700
Donald J. Rethman
Architect In Charge
License: AR0017303

Design Forum Engineering
2056 Byers Rd
Miamisburg, OH 45342
Tel: (844) 804-7700
Timothy L. Raberding, PE
Professional Engineer
License: 62078

PROJECT NAME:
US 98 & GRIFFIN RD

PROJECT ADDRESS:
3105 US-98 NORTH
LAKELAND, FLORIDA 33801

STORE #: 80004
PROJECT #: 96892-001
ISSUE DATE: 2025-10-10
DESIGNER: ASHLEY SUEIRAS
PRODUCTION DESIGNER: ANDY MCLOUD
CHECKED BY: DONALD RETHMAN

Revision Schedule

Rev	Date	By	Description
2	08/26/25		REV-2

SHEET TITLE:
FF & E SCHEDULES

SCALE: NO SCALE

SHEET NUMBER:
I-101.1

10/9/2025 9:54:05 AM C:\Users\julia.gray\Documents\96892-001_80004_US 98 & Griffin Rd, FL_2025_Julia.grayFRYY6.rvt

MECHANICAL EQUIPMENT SCHEDULE - "M"

DESIGN ID	COUNT	DESCRIPTION	FURN. BY	INST. BY	COMMENTS
FAN					
20671	4	60IN BLACK HAIKU - I SERIES - INDOOR FANS	SB	GC	BY - BIG ASS FANS
HVAC					
10317	6	HVAC - VAV SUPPLY 4 WAY SQUARE - 24IN 610MM	GC	GC	COLOR TO MATCH CEILING, REFER TO MECHANICAL DRAWINGS.
2 X1200	8	HVAC - SUPPLY LINEAR - 4IN	GC	GC	COLOR TO MATCH CEILING, REFER TO MECHANICAL DRAWINGS.
OTHER					
17797	1	ENERGY MANAGEMENT SYSTEM - HVAC ONLY	SB	GC	

PLUMBING FIXTURE SCHEDULE - "P"

DESIGN ID	COUNT	DESCRIPTION	FURN. BY	INST. BY	COMMENTS
DRAIN					
10294	9	DRAIN - FLOOR SINK SQUARE - 12IN 305MM	SB	GC	<varies>
10594	2	DRAIN - FLOOR SINK SQUARE - 5IN 125MM	GC	GC	ZURN ZN415B
10726	7	DRAIN - GRATE HALF SQUARE - 12IN 305MM	SB	GC	
EQUIPMENT					
2 X8019	1	HOT WATER RECIRCULATION PUMP	GC	GC	BELL & GOSSETT MODEL NBF-36 PUMP WITH BELL & GOSSETT AQS-3/4 AQUASTAT, AND BELL & GOSSETT TC-1 AUTOMATIC TIMER
FAUCET					
10152	1	FAUCET - DOUBLE LABORATORY WITH BENT RISER SPOUT	SB	GC	
10153	4	FAUCET - WATER TOWER - 12IN 305MM	SB	GC	
10215	2	FAUCET - DOUBLE LABORATORY WITH SWING SPOUT	SB	GC	
10447	1	FAUCET - PRE RINSE SPRAYER WALL MOUNTED	SB	GC	
10597	2	FAUCET - SINGLE HANDLE	SB	GC	
10804	1	FAUCET - PRE RINSE SWING SPOUT	SB	GC	
10922	1	FAUCET - MOP SINK WALL MOUNTED	SB	GC	
10943	1	FAUCET - SINGLE LABORATORY WITH SWING SPOUT	SB	GC	
11003	2	FAUCET - METERED	SB	GC	
13588	1	FAUCET - HAND SINK WALL MOUNTED	SB	GC	
21352	2	FAUCET - RESTROOM WITH MOTION SENSOR	SB	GC	
22642	3	FAUCET - INSTANTHOT SYSTEM 2 BUTTON WITH BOILER AND BRACKET	SB	GC	KIT INCLUDES FONT, UNDERCOUNTER BOILER AND BOILER BRACKET FOR SIDE PANEL MOUNTING. BRACKET CAN BE FLOOR MOUNTED USING SET OF (4) STAINLESS STEEL LEGS, ORDERED SEPARATELY THROUGH VENDOR.
FILTER					
12501	1	FILTER - RO SYSTEM 600GPD	SB	VD	
12507	1	FILTER - RO SYSTEM STORAGE TANK RO40	SB	VD	
12896	1	FILTER - BRINE TANK	SB	VD	
12899	2	FILTER - POLY GLASS VESSEL	SB	VD	
13076	1	FILTER - PREFILTRATION SYSTEM	SB	VD	
13082	1	FILTER - WATER SOFTENER TWIN	SB	VD	
2 22603	1	FILTER - RO SYSTEM STORAGE TANK RO20	SB	VD	
23355	1	FILTER - FILTRATION BOOSTER PUMP	SB	VD	
24272	1	FILTER - RO SYSTEM INSTALL KIT	SB	VD	
OTHER					
22224	1	WATER HEATER TANK ELECTRIC - 13.5KW	GC	GC	
SINK					
10116	2	SINK - RESTROOM WALL MOUNTED	SB	GC	
10549	1	SINK - RINSE DROP IN SST - 12X20IN 305X510MM	SB	GC	
10995	1	SINK - MOP - 24X24IN 610X610MM	SB	GC	
13264	1	SINK - 3 COMP WORK SST - 93IN 2350MM	SB	GC	
14688	1	SINK - HAND WITH SIDE SPLASH WALL MOUNTED SST	SB	GC	
18743	1	SINK - WATER FILLING STATION - 36X24IN 915X610MM	SB	GC	
22630	1	SINK - RINSE DROP IN - 27X26IN 685X670MM	SB	GC	
22768	2	SINK - COUNTERTOP RINSER WITH WATER TOWER - 26X9IN 660X235MM	SB	GC	
TOILET					
2 11871	2	TOILET - WITH TANK SINGLE FLUSH	GC	GC	WC TO BE PURCHASED THROUGH FERGUSON: NA.PROJECTS@FERGUSON.COM

RESPONSIBILITY LEGEND

FURN. BY	INST. BY
SB - FURNISHED BY STARBUCKS	GC - INSTALLED BY GENERAL CONTRACTOR
GC - FURNISHED BY GENERAL CONTRACTOR	SB - INSTALLED BY STARBUCKS
VD - FURNISHED BY VENDOR	VD - INSTALLED BY VENDOR

NOTE: ALL RESPONSIBILITIES TO BE CONFIRMED WITH STARBUCKS CONSTRUCTION MANAGER PRIOR TO ORDERING / CONSTRUCTION.

FOR CONSTRUCTION

© 2019 STARBUCKS COFFEE COMPANY

STARBUCKS®
2401 UTAH AVENUE SOUTH
SEATTLE, WASHINGTON 98134
(206) 318-1575

THESE DRAWINGS AND THE PROJECT MANUAL ARE CONFIDENTIAL AND SHALL REMAIN THE SOLE PROPERTY OF STARBUCKS CORPORATION, WHICH IS THE OWNER OF THE COPYRIGHT IN THIS WORK. THEY SHALL NOT BE REPRODUCED (IN WHOLE OR IN PART), SHARED WITH THIRD PARTIES OR USED IN ANY MANNER ON OTHER PROJECTS OR EXTENSIONS TO THIS PROJECT WITHOUT THE PRIOR WRITTEN CONSENT OF STARBUCKS CORPORATION. THESE DRAWINGS AND SPECIFICATIONS ARE INTENDED TO EXPRESS DESIGN INTENT FOR A PROTOTYPICAL STARBUCKS STORE (WHICH IS SUBJECT TO CHANGE AT ANYTIME) AND DO NOT REFLECT ACTUAL SITE CONDITIONS. NEITHER PARTY SHALL HAVE ANY OBLIGATION NOR LIABILITY TO THE OTHER (EXCEPT STATED ABOVE) UNTIL A WRITTEN AGREEMENT IS FULLY EXECUTED BY BOTH PARTIES.

STARBUCKS TEMPLATE VERSION: i2021-09-13

Design Forum Architects Inc.
2056 Byers Rd
Miamisburg, OH 45342
Tel: (844) 804-7700
Donald J. Rethman
Architect In Charge
License: AR0017303

Design Forum Engineering
2056 Byers Rd
Miamisburg, OH 45342
Tel: (844) 804-7700
Timothy L. Raberding, PE
Professional Engineer
License: 62078

PROJECT NAME:
US 98 & GRIFFIN RD

PROJECT ADDRESS:
3105 US-98 NORTH
LAKELAND, FLORIDA 33801

STORE #: 80004
PROJECT #: 96892-001
ISSUE DATE: 2025-10-10
DESIGNER: ASHLEY SUEIRAS
PRODUCTION DESIGNER: ANDY MCLOUD
CHECKED BY: DONALD RETHMAN

Revision Schedule

Rev	Date	By	Description
2	08/26/25		REV-2

SHEET TITLE:
FF & E SCHEDULES

SCALE: NO SCALE

SHEET NUMBER:
I-101.2

10/9/2025 9:54:06 AM C:\Users\julia.gray\Documents\96892-001_80004_US 98 & Griffin Rd, FL_2025_Julia.grayFRYY6.rvt

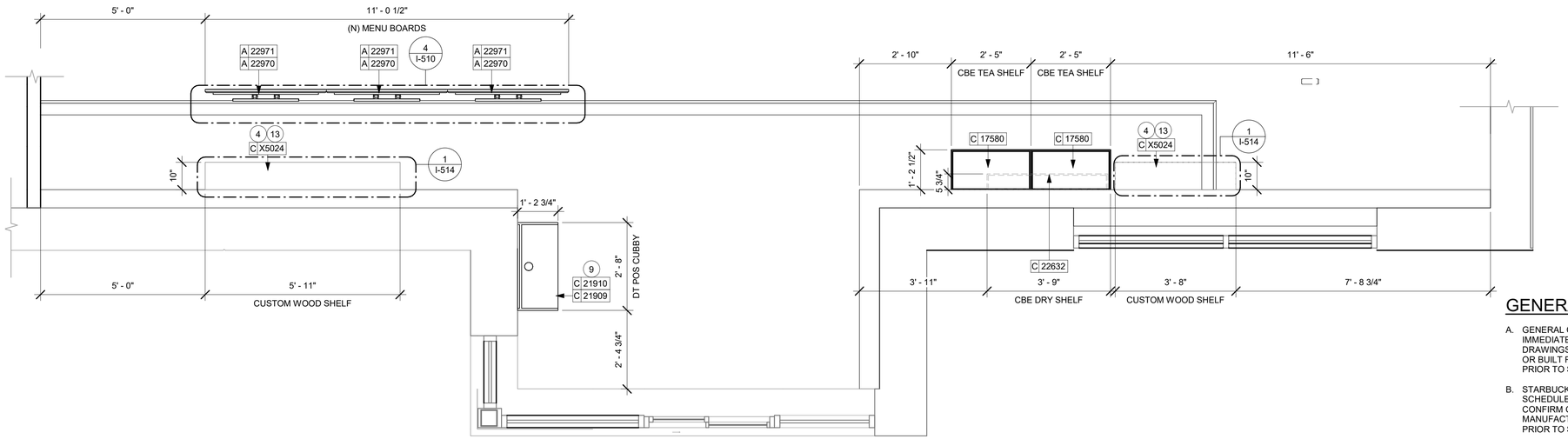

2 UPPER CASEWORK PLAN

Scale: 1/2" = 1'-0"

0 1' 2' 4'

Scale: 1/2" = 1'-0"

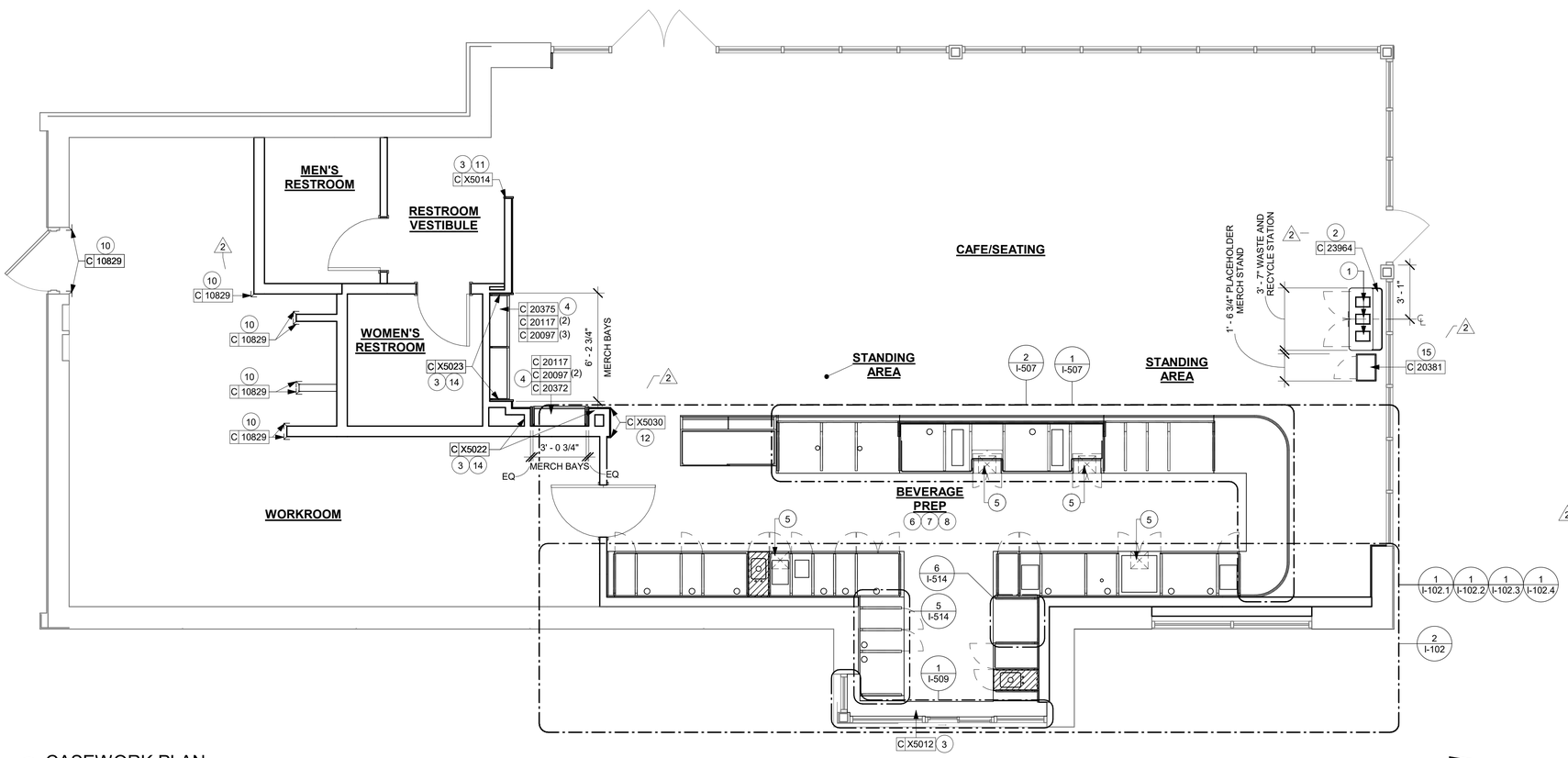

1 CASEWORK PLAN

Scale: 1/4" = 1'-0"

0 2' 4' 8'

Scale: 1/4" = 1'-0"

N

GENERAL NOTES

A. GENERAL CONTRACTOR TO NOTIFY CONSTRUCTION MANAGER IMMEDIATELY IF A DISCREPANCY EXISTS BETWEEN CASEWORK SHOP DRAWINGS, EXISTING SITE CONDITIONS, ARCHITECTURAL DRAWINGS OR BUILT FIXTURES. ALL DIMENSIONS SHALL BE FIELD VERIFIED BY GC PRIOR TO SHOP DRAWINGS PRODUCTION.

B. STARBUCKS CONSTRUCTION MANAGER TO COORDINATE AND SCHEDULE CASEWORK DELIVERY DATE. GENERAL CONTRACTOR TO CONFIRM CASEWORK DELIVERY DATEWITH CASEWORK MANUFACTURER AT FOUR (4) WEEKS PRIOR AND THEN ONE (1) WEEK PRIOR TO SCHEDULED DATE OF DELIVERY.

C. STARBUCKS CONTRACTS DIRECTLY WITH CASEWORK VENDOR TO SUPPLY CASEWORK LISTED IN THE CASEWORK SCHEDULE, UNLESS OTHERWISE NOTED.

D. CASEWORK VENDOR TO PROVIDE COMPLETE SHOP DRAWINGS AND INSTALLATION PACKAGE TO GENERAL CONTRACTOR TO FACILITATE PROPER INSTALLATION.

E. ALL CASEWORK BOX BASE / TOE KICKS SHALL BE SET AND LEVELED USING 1/4" (6 MM) NON-ABSORBENT PLASTIC SHIMS PROVIDED BY CASEWORK VENDOR.

F. SEE WALL FINISH PLAN FOR LOCATION, TAGGING, AND FINISH SCHEDULES OF APPLIED WALL TREATMENTS.

G. SEE REFLECTED CEILING PLAN FOR CASEWORK SOFFIT LOCATIONS.

H. REFERENCE PLUMBING AND ELECTRICAL PLANS FOR PLACEMENT OF ELECTRICAL, DATA AND PLUMBING ON FRONT AND BACKLINE OF BAR.

KEYED NOTES

1. DO NOT CAULK TRASH RINGS TO COUNTERTOPS.
2. INSTALL WASTE AND RECYCLING STATION AS INDICATED.
3. REFER TO CASEWORK DETAIL SHEETS FOR ADDITIONAL INFORMATION.
4. INSTALL MERCH BAY AS INDICATED. SECURE TO WALL.
5. FLOOR SINK BELOW. CASEWORK MANUFACTURER TO COORDINATE DESIGN TO ENSURE (SP) THIS AREA IS READILY ACCESSIBLE FOR CLEANING AND FREE OF COUNTERTOP SUPPORT.
6. INSTALL CASEWORK, COUNTERTOPS, SHELVES, CUBBIES, FINISHES, TRIM AND TABLE TOPS THROUGHOUT. REFERENCE FINISH SCHEDULE AND MANUFACTURER'S SPECIFICATIONS FOR ADDITIONAL INFORMATION.
7. ALL COUNTERTOPS UTILIZED FOR CUSTOMER TRANSACTIONS, INCLUDING BAR, CONDIMENT AND SALES COUNTERTOPS SHALL BE INSTALLED AT 2'-10" (860 MM) MAXIMUM A.F.F.
8. VARIABLE WIDTH FILLER CABINET / COUNTERTOP REQUIRED TO FILL GAP (FIELD VERIFY DIMENSION). VENDOR TO COORDINATE EXACT DIMENSION WITH GC PRIOR TO INSTALLATION.
9. INSTALL DT POS CUBBY AS INDICATED.
10. INSTALL CORNER GUARDS AT OUTSIDE CORNER AS INDICATED. SEE INTERIOR ELEVATIONS FOR CLARIFICATION.
11. INSTALL WOOD TRIM AT RESTROOM VESTIBULE WALL EDGE AS INDICATED.
12. INSTALL FRY REGLET "Y" TRIM AS INDICATED. SEE DETAIL: 11/I-502.
13. INSTALL CUSTOM WOOD SHELF AT BACKBAR AS INDICATED.
14. INSTALL CUSTOM WOOD TRIM AROUND MERCH BAYS AS INDICATED.
15. INSTALL PLACEHOLDER MERCH STAND FOR BUSSING STATION AS INDICATED.

LEGEND

INDICATES STAINLESS STEEL (SST) COUNTERTOP

INDICATES SOLID SURFACE (SS) COUNTERTOP

INDICATES CORNER GUARD @ BOH -10829

NOTE:

SEE SHEET I-101.1 FOR DATA DEVICE SCHEDULE "A"

SEE SHEET I-103 FOR CASEWORK AND CASEWORK FINISH SCHEDULE "C"

FOR CONSTRUCTION

© 2019 STARBUCKS COFFEE COMPANY

STARBUCKS®
2401 UTAH AVENUE SOUTH
SEATTLE, WASHINGTON 98134
(206) 318-1575

THESE DRAWINGS AND THE PROJECT MANUAL ARE CONFIDENTIAL AND SHALL REMAIN THE SOLE PROPERTY OF STARBUCKS CORPORATION, WHICH IS THE OWNER OF THE COPYRIGHT IN THIS WORK. THEY SHALL NOT BE REPRODUCED (IN WHOLE OR IN PART), SHARED WITH THIRD PARTIES OR USED IN ANY MANNER ON OTHER PROJECTS OR EXTENSIONS TO THIS PROJECT WITHOUT THE PRIOR WRITTEN CONSENT OF STARBUCKS CORPORATION. THESE DRAWINGS AND SPECIFICATIONS ARE INTENDED TO EXPRESS DESIGN INTENT FOR A PROTOTYPICAL STARBUCKS STORE (WHICH IS SUBJECT TO CHANGE AT ANYTIME) AND DO NOT REFLECT ACTUAL SITE CONDITIONS. NEITHER PARTY SHALL HAVE ANY OBLIGATION NOR LIABILITY TO THE OTHER (EXCEPT STATED ABOVE) UNTIL A WRITTEN AGREEMENT IS FULLY EXECUTED BY BOTH PARTIES.

STARBUCKS TEMPLATE VERSION: i2021-09-13

Design Forum Architects Inc.
2056 Byers Rd
Miamisburg, OH 45342
Tel: (844) 804-7700
Donald J. Rethman
Architect In Charge
License: AR0017303

Design Forum Engineering
2056 Byers Rd
Miamisburg, OH 45342
Tel: (844) 804-7700
Timothy L. Raberding, PE
Professional Engineer
License: 62078

PROJECT NAME:
US 98 & GRIFFIN RD

PROJECT ADDRESS:
3105 US-98 NORTH
LAKELAND, FLORIDA 33801

STORE #:	80004
PROJECT #:	96892-001
ISSUE DATE:	2025-10-10
DESIGNER:	ASHLEY SUEIRAS
PRODUCTION DESIGNER:	ANDY MCLOUD
CHECKED BY:	DONALD RETHMAN

Revision Schedule

Rev	Date	By	Description
1	08/26/25		REV-1
2	08/26/25		REV-2

SHEET TITLE:
CASEWORK PLAN

SCALE: AS SHOWN

SHEET NUMBER:
I-102

10/9/2025 9:54:07 AM C:\Users\julia.gray\Documents\96892-001_80004_US 98 & Griffin Rd, FL_2025_Julia.grayFRYY6.rvt

ADAPTABLE CASEWORK SUPPORT LEG AND DIEWALL BASE SCHEDULE "C"					
DESIGN ID	COUNT	DESCRIPTION	FURN. BY	INST. BY	COMMENTS
DIEWALL					
21886	3	DIEWALL - BASE - VARIABLE LENGTH	SB	GC	
21888	42	DIEWALL - SUPPORT LEG	SB	GC	
X5003	1	CUSTOM DIEWALL - SIT-HERE ROUNDED	SB	GC	SEE DETAIL: 1/I-507

RESPONSIBILITY LEGEND

FURN. BY	INST. BY
SB - FURNISHED BY STARBUCKS	GC - INSTALLED BY GENERAL CONTRACTOR
GC - FURNISHED BY GENERAL CONTRACTOR	SB - INSTALLED BY STARBUCKS
VD - FURNISHED BY VENDOR	VD - INSTALLED BY VENDOR

NOTE: ALL RESPONSIBILITIES TO BE CONFIRMED WITH STARBUCKS CONSTRUCTION MANAGER PRIOR TO ORDERING / CONSTRUCTION.

GENERAL NOTES

A. SEE SHEET I-103 FOR COMPLETE CASEWORK SCHEDULE.

B. METAL COMPONENTS PROVIDED BY CASEWORK SUPPLIER UNLESS OTHERWISE NOTED.

C. DIEWALL AND BOX BASES TO BE INSTALLED PRIOR TO FLOORING MATERIAL INSTALLATION.

D. G.C. TO INSTALL BLOCKING BETWEEN DIEWALL BASE.

E. ALL DIMENSIONS TAKEN FROM FRONTLINE DATUM POINT TO OUTSIDE CORNER OF DIEWALL BASE.

F. BOX BASE (IF APPLICABLE) BUTTS UP AGAINST INSIDE FACE OF DIEWALL. PROVIDE SEALANT AT SEAM.

G. LEVEL BOX BASES TO BOTTOM RAIL OF WALL FRAME.

KEYED NOTES

1. CASEWORK FRAMEWORK ABOVE.
2. FOOD CASE.
3. FLOOR SINK BELOW. CASEWORK MANUFACTURER TO COORDINATE DESIGN TO ENSURE THIS AREA IS READILY ACCESSIBLE FOR CLEANING AND FREE OF COUNTERTOP SUPPORT.

LEGEND

CABINET LEG

DATUM POINT

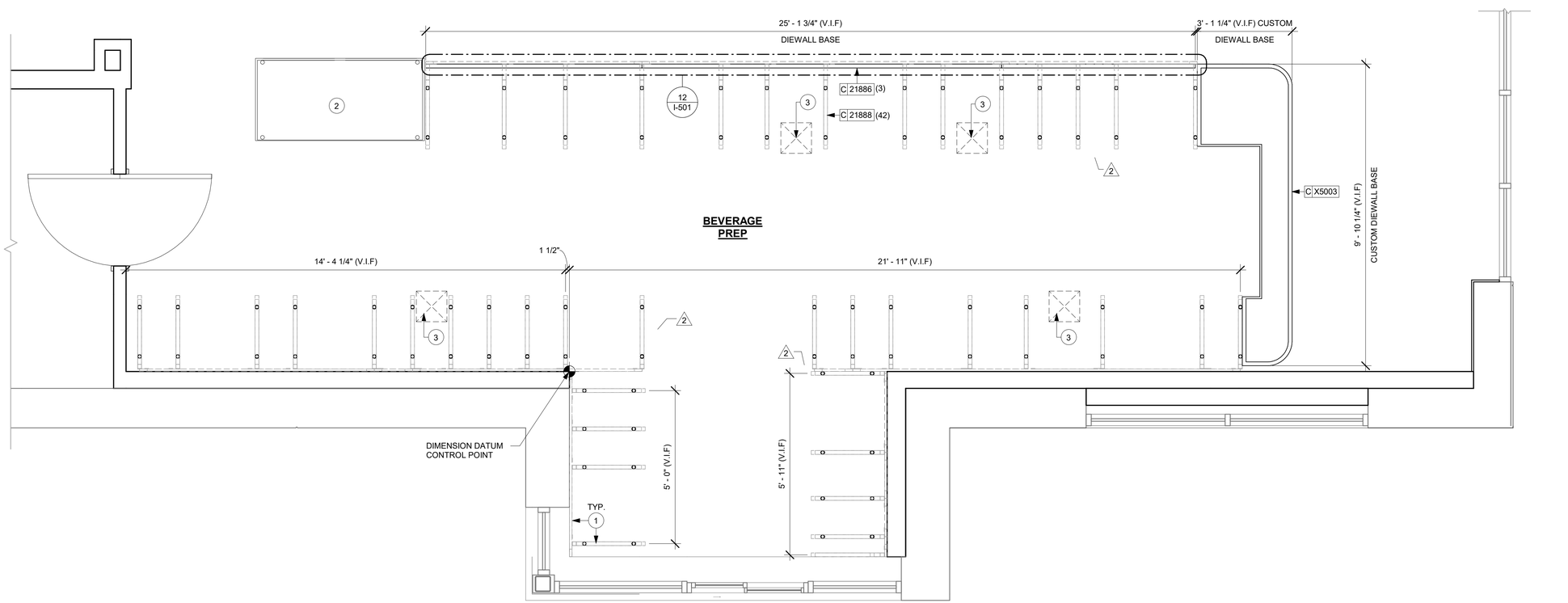

1 ADAPTABLE CASEWORK BASE PLAN
Scale: 1/2" = 1'-0"

N

0 2' 4' 8'
Scale: 1/4" = 1'-0"

FOR CONSTRUCTION

© 2019 STARBUCKS COFFEE COMPANY

STARBUCKS®
2401 UTAH AVENUE SOUTH
SEATTLE, WASHINGTON 98134
(206) 318-1575

THESE DRAWINGS AND THE PROJECT MANUAL ARE CONFIDENTIAL AND SHALL REMAIN THE SOLE PROPERTY OF STARBUCKS CORPORATION, WHICH IS THE OWNER OF THE COPYRIGHT IN THIS WORK. THEY SHALL NOT BE REPRODUCED (IN WHOLE OR IN PART), SHARED WITH THIRD PARTIES OR USED IN ANY MANNER ON OTHER PROJECTS OR EXTENSIONS TO THIS PROJECT WITHOUT THE PRIOR WRITTEN CONSENT OF STARBUCKS CORPORATION. THESE DRAWINGS AND SPECIFICATIONS ARE INTENDED TO EXPRESS DESIGN INTENT FOR A PROTOTYPICAL STARBUCKS STORE (WHICH IS SUBJECT TO CHANGE AT ANYTIME) AND DO NOT REFLECT ACTUAL SITE CONDITIONS. NEITHER PARTY SHALL HAVE ANY OBLIGATION NOR LIABILITY TO THE OTHER (EXCEPT STATED ABOVE) UNTIL A WRITTEN AGREEMENT IS FULLY EXECUTED BY BOTH PARTIES.

STARBUCKS TEMPLATE VERSION: i2021-09-13

Design Forum Architects Inc.
2056 Byers Rd
Miamisburg, OH 45342
Tel: (844) 804-7700
Donald J. Rethman
Architect In Charge
License: AR0017303

Design Forum Engineering
2056 Byers Rd
Miamisburg, OH 45342
Tel: (844) 804-7700
Timothy L. Raberding, PE
Professional Engineer
License: 62078

PROJECT NAME:
US 98 & GRIFFIN RD

PROJECT ADDRESS:
3105 US-98 NORTH
LAKELAND, FLORIDA 33801

STORE #:	80004
PROJECT #:	96892-001
ISSUE DATE:	2025-10-10
DESIGNER:	ASHLEY SUEIRAS
PRODUCTION DESIGNER:	ANDY MCLOUD
CHECKED BY:	DONALD RETHMAN

Revision Schedule

Rev	Date	By	Description
2	08/26/25		REV-2

SHEET TITLE:
ADAPTABLE CASEWORK BASE PLAN
SCALE: 1/2" = 1'-0"

SHEET NUMBER:
I-102.1

10/9/2025 9:54:08 AM C:\Users\julia.gray\Documents\96892-001_80004_US 98 & Griffin Rd, FL_2025_Julia.grayFRYY6.rvt

ADAPTABLE CASEWORK FRAMEWORK SCHEDULE - "C"					
DESIGN ID	COUNT	DESCRIPTION	FURN. BY	INST. BY	COMMENTS
DIEWALL					
21885	13	DIEWALL - FRAMING - VARIABLE LENGTH	SB	GC	
21888	42	DIEWALL - SUPPORT LEG	SB	GC	

2

RESPONSIBILITY LEGEND

FURN. BY	INST. BY
SB - FURNISHED BY STARBUCKS	GC - INSTALLED BY GENERAL CONTRACTOR
GC - FURNISHED BY GENERAL CONTRACTOR	SB - INSTALLED BY STARBUCKS
VD - FURNISHED BY VENDOR	VD - INSTALLED BY VENDOR

NOTE: ALL RESPONSIBILITIES TO BE CONFIRMED WITH STARBUCKS CONSTRUCTION MANAGER PRIOR TO ORDERING / CONSTRUCTION.

GENERAL NOTES

A. SEE SHEET I-103 FOR COMPLETE CASEWORK SCHEDULE.

B. METAL COMPONENTS PROVIDED BY CASEWORK SUPPLIER UNLESS OTHERWISE NOTED.

C. DIEWALL TO BE INSTALLED PRIOR TO FLOORING MATERIAL INSTALLATION.

D. DIEWALL TO BE ANCHORED TO FLOOR WITH HARDWARE SUPPLIED BY CASEWORK VENDOR.

E. G.C. TO PROVIDE CONTINUOUS WALL BLOCKING BEHIND CASEWORK. G.C. TO INSTALL BLOCKING BETWEEN DIEWALL BASE.

F. CASEWORK FRAME AT BAR ENDS ARE SUPPORTED BY 90 DEGREE DIEWALL BASE.

G. ALL DIMENSIONS TAKEN FROM FRONTLINE DATUM POINT TO OUTSIDE CORNER OF DIEWALL BASE.

H. TOP EDGE OF DIEWALL FRAME TO BE INSTALLED AT 32 13/16" A.F.F. AT LOW POINT.

I. ALL DIMENSIONS ARE TO CENTER OF CABINET FRAME UNLESS NOTED OTHERWISE.

KEYED NOTES

1. PROVIDE 3/4" BLOCKING TO 34" A.F.F. FOR ALL WALL FRAMES TO SUPPORT CASEWORK LEG.
2. METAL SUPPORT LEG ADJACENT TO WALL TO BE SUPPORTED BY METAL ANGLE FASTENED TO WALL PER CONSTRUCTION DETAILS.
3. DIMENSIONS LOCATING SUPPORT LEG ARE TO CENTER OF FRAME.
4. FOOD CASE.
5. RADIUS ENDCAP. FABRICATE USING TRADITIONAL CASEWORK CONSTRUCTION.
6. FLOOR SINK BELOW. CASEWORK MANUFACTURER TO COORDINATE DESIGN TO ENSURE THIS AREA IS READILY ACCESSIBLE FOR CLEANING AND FREE OF COUNTERTOP SUPPORT.

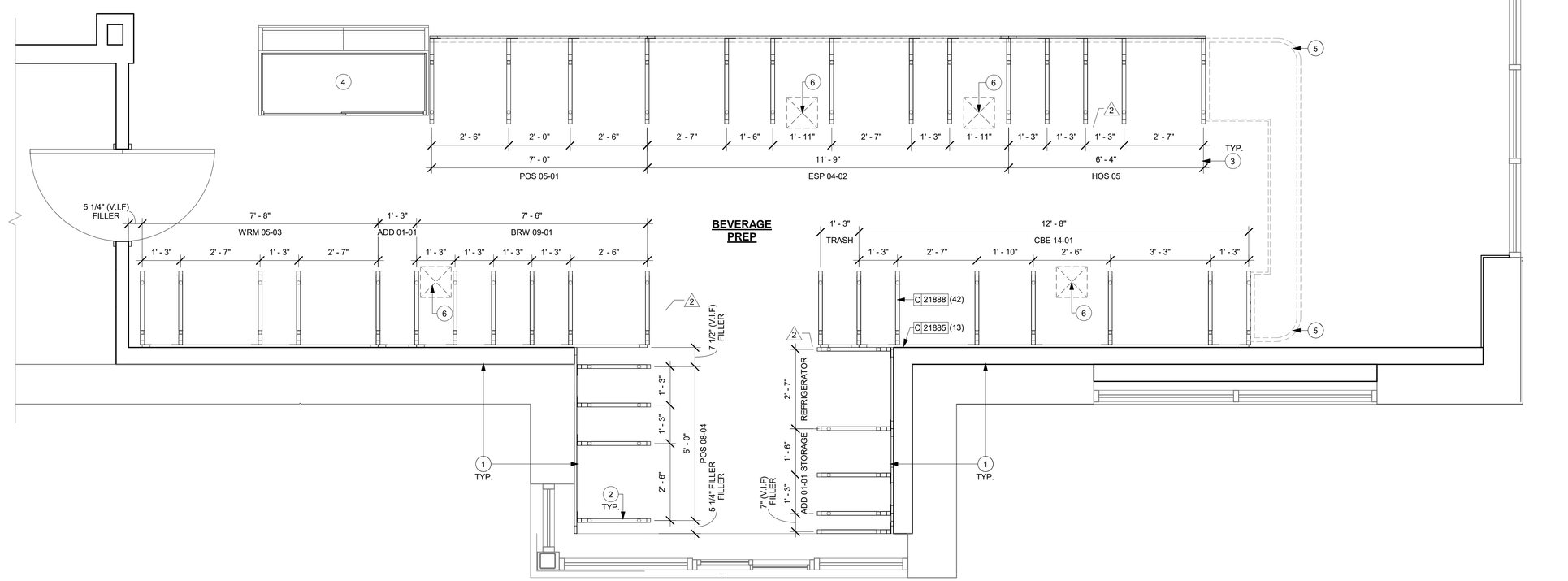

1 ADAPTABLE CASEWORK FRAMEWORK PLAN

Scale: 1/2" = 1'-0"

N

0 1' 2' 4'

Scale: 1/2" = 1'-0"

FOR CONSTRUCTION

© 2019 STARBUCKS COFFEE COMPANY

STARBUCKS®
2401 UTAH AVENUE SOUTH
SEATTLE, WASHINGTON 98134
(206) 318-1575

THESE DRAWINGS AND THE PROJECT MANUAL ARE CONFIDENTIAL AND SHALL REMAIN THE SOLE PROPERTY OF STARBUCKS CORPORATION, WHICH IS THE OWNER OF THE COPYRIGHT IN THIS WORK. THEY SHALL NOT BE REPRODUCED (IN WHOLE OR IN PART), SHARED WITH THIRD PARTIES OR USED IN ANY MANNER ON OTHER PROJECTS OR EXTENSIONS TO THIS PROJECT WITHOUT THE PRIOR WRITTEN CONSENT OF STARBUCKS CORPORATION. THESE DRAWINGS AND SPECIFICATIONS ARE INTENDED TO EXPRESS DESIGN INTENT FOR A PROTOTYPICAL STARBUCKS STORE (WHICH IS SUBJECT TO CHANGE AT ANYTIME) AND DO NOT REFLECT ACTUAL SITE CONDITIONS. NEITHER PARTY SHALL HAVE ANY OBLIGATION NOR LIABILITY TO THE OTHER (EXCEPT STATED ABOVE) UNTIL A WRITTEN AGREEMENT IS FULLY EXECUTED BY BOTH PARTIES.

STARBUCKS TEMPLATE VERSION: i2021-09-13

Design Forum Architects Inc.
2056 Byers Rd
Miamisburg, OH 45342
Tel: (844) 804-7700
Donald J. Rethman
Architect In Charge
License: AR0017303

Design Forum Engineering
2056 Byers Rd
Miamisburg, OH 45342
Tel: (844) 804-7700
Timothy L. Raberding, PE
Professional Engineer
License: 62078

PROJECT NAME:
US 98 & GRIFFIN RD

PROJECT ADDRESS:
3105 US-98 NORTH
LAKELAND, FLORIDA 33801

STORE #:	80004
PROJECT #:	96892-001
ISSUE DATE:	2025-10-10
DESIGNER:	ASHLEY SUEIRAS
PRODUCTION DESIGNER:	ANDY MCLOUD
CHECKED BY:	DONALD RETHMAN

Revision Schedule

Rev	Date	By	Description
2	08/26/25		REV-2

SHEET TITLE:
ADAPTABLE CASEWORK FRAMEWORK PLAN
SCALE: 1/2" = 1'-0"

SHEET NUMBER:
I-102.2

10/9/2025 9:54:09 AM C:\Users\julia.gray\Documents\96892-001_80004_US 98 & Griffin Rd, FL_2025_Julia.gray\FRYY6.rvt

ADAPTABLE CASEWORK CABINET TYPES AND BILL OF MATERIALS SCHEDULE										
KEY NUMBER	CABINET TYPE	FULL HT. DOORS	3/4 DOOR	3/4 DOOR W/ VENT	DRAWER	BOTTOM SHELF	ADJUST. SHELF	BACK PANEL	SIDE PANELS	BOX BASE^^
101	15" STORAGE	1 DID 21894	N/A	N/A	N/A	1 DID 21891	1 DID 21893	1 DID 21892	2** DID 21890	NO
102	18" STORAGE	1 DID 21901	N/A	N/A	N/A	1 DID 21898	1 DID 21900	1 DID 21899	2** DID 21890	NO
103	30" STORAGE	2 DID 21905	N/A	N/A	N/A	1 DID 21902	1 DID 21904	1 DID 21903	2** DID 21890	NO
104	30" POS	N/A	N/A	N/A	N/A	1 DID 21902	1 DID 21904	1 DID 21912	2** DID 21890	NO
106	15" DRAWER	N/A	1 DID 21895	N/A	1 DID 21896	1 DID 21891	1 DID 21893	1 DID 21892	2** DID 21890	NO
2 △ 107	15" DELIVERY DRAWER	N/A	N/A	N/A	1 DID 22986	1 DID 21891	0	1 DID 21892	2** DID 21890	NO
108	15" CUBBY - COFFEE	N/A	N/A	N/A	N/A	1 DID 21891	1 DID 21893	1 DID 21892	2** DID 21890	NO
109	15" CUBBY - TRASH	N/A	1/0* DID 21895	N/A	N/A	N/A	0	0	2** DID 21890	NO
110	15" SINK	1/0* DID 21894	N/A	N/A	N/A	1^ DID 21891	0	0	2** DID 21890	NO
111	ICE BIN	1/0* DID 21904	N/A	N/A	N/A	N/A	0	0	0 (1,2)** DID 21890	NO
112	24" SAFE	N/A	N/A	N/A	N/A	N/A	0	0	0 (1,2)** DID 21890	NO
113	30" REFRIGERATOR	N/A	N/A	N/A	N/A	N/A	0	0	0 (1,2)** DID 21890	NO

* DOOR NOT REQUIRED WHERE CUSTOMER VIEW IS LIMITED OR NEGLIGIBLE (i.e. FRONTLINE OR BEHIND WALLS)

** SIDE PANEL QUANTITY SHOWN IS FOR STAND-ALONE CABINETS; ACUTAL SIDE PANEL QUANTITY IS DEPENDENT ON ADJACENT CABINET TYPE AS SIDE PANELS CAN BE SHARED.

^ BOTTOM SHELF AND BOX BASE (IF APPLICABLE), SHOULD BE REMOVED AT SINK/ICE BIN CABINETS WITH FLOOR SINK LOCATED...

^^ BOX BASE TO BE PROVIDED AT SPECIFIC CABINETS WHEN REQUIRED BY JURISDICTIONAL CODE OR LOCAL OPERATOR PREFERENCE (NOTED AS "YES")

ADAPTABLE CASEWORK SUBSTRATE PANEL SCHEDULE - "C"					
DESIGN ID	COUNT	DESCRIPTION	FURN. BY	INST. BY	COMMENTS
DIEWALL					
21887	3 △ 2	DIEWALL - SUBSTRATE PANEL - VARIABLE LENGTH	SB	GC	

GENERAL NOTES

- SEE SHEET I-103 FOR COMPLETE CASEWORK SCHEDULE.
- ALL DIMENSIONS ARE TO CENTER OF FRAME ASSEMBLY.
- CABINET PANELS:
  > ALL CABINET SHELVING TO BE SECURED TO METAL COMPONENTS WITH #8 ROUND HEAD SCREWS.
  > ALL METAL COMPONENTS SHALL BE SECURED TO FRAME ASSEMBLY AT KEY HOLE LOCATIONS.
  > BOTTOM FLASHING SECURED TO HDPE WITH SILICONE.
- SUBSTRATE PANELS:
  > SUBSTRATE PANELS SHALL BE MEDEX.
  > CASEWORK VENDOR SHALL PROVIDE ALL SUB PANELS TO BE CUT TO SIZE PRIOR TO SHIPPING.
  > CASEWORK VENDOR SHALL APPLY Z-CLIPS TO FINISH PANELS PRIOR TO SHIPPING.
  > FRONTLINE PANELS TO BE SECURED TO SUBSTRATE VIA Z-CLIP APPLICATION.
  > PANEL INSTALLATION TO START AT OUTSIDE CORNER LOCATIONS.
  > END PANELS TO BE SCRIBED ON SITE.
  > ALL PANEL CUT-OUTS SHALL BE FINISHED ALL
  > Z-CLIPS TO BE INSTALLED 1" AWAY FROM PANEL EDGE.

KEYED NOTES

1. NITRO EQUIPMENT LOCATION.
2. FOOD CASE.
3. FILLER FINISH PANEL TO BE SHIPPED LONGER THAN DIMENSIONED AND CUT TO FIT IN FIELD.
4. CASEWORK SUPPLIER TO PROVIDE ADDITIONAL BACKER SUBSTRATE TO ALIGN END CAP PANEL TO ADJACENT DOOR FACES.

RESPONSIBILITY LEGEND

FURN. BY	INST. BY
SB - FURNISHED BY STARBUCKS	GC - INSTALLED BY GENERAL CONTRACTOR
GC - FURNISHED BY GENERAL CONTRACTOR	SB - INSTALLED BY STARBUCKS
VD - FURNISHED BY VENDOR	VD - INSTALLED BY VENDOR

NOTE: ALL RESPONSIBILITIES TO BE CONFIRMED WITH STARBUCKS CONSTRUCTION MANAGER PRIOR TO ORDERING / CONSTRUCTION.

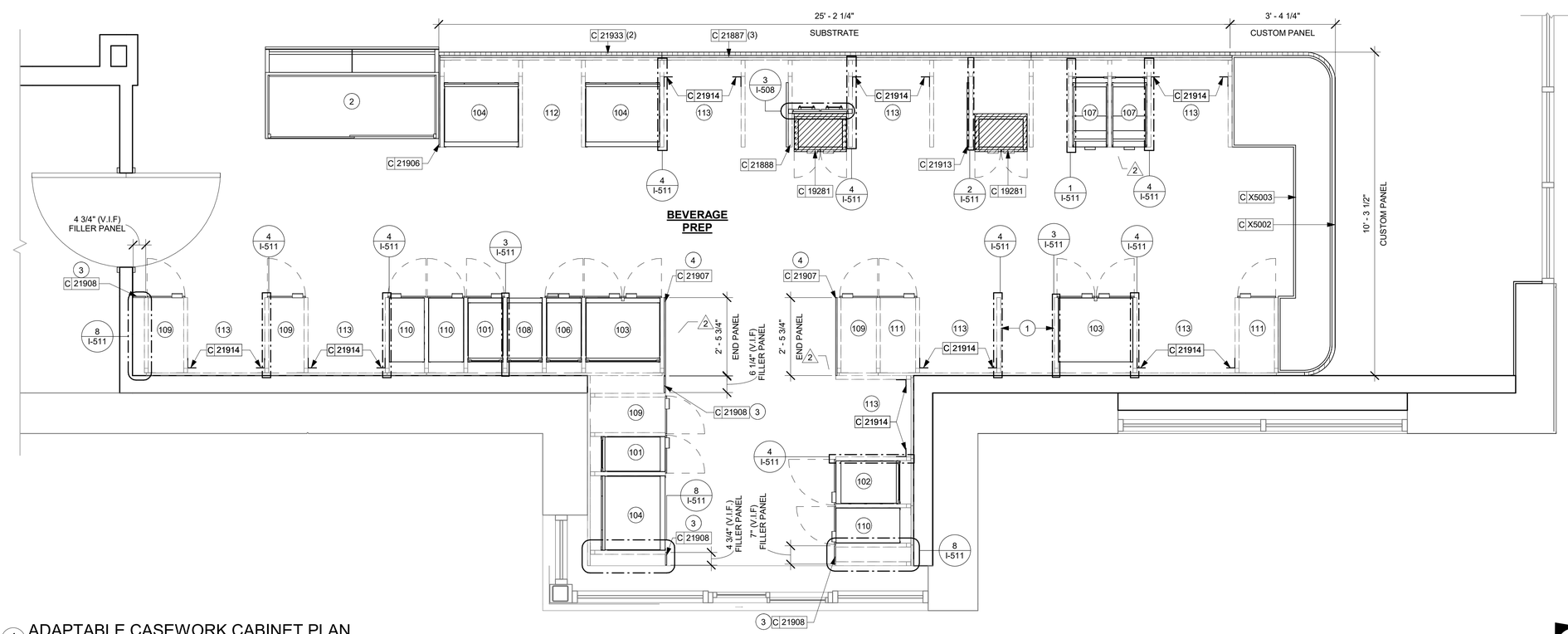

1 ADAPTABLE CASEWORK CABINET PLAN
Scale: 1/2" = 1'-0"

N

0 1' 2' 4'
Scale: 1/2" = 1'-0"

FOR CONSTRUCTION

© 2019 STARBUCKS COFFEE COMPANY

STARBUCKS®
2401 UTAH AVENUE SOUTH
SEATTLE, WASHINGTON 98134
(206) 318-1575

THESE DRAWINGS AND THE PROJECT MANUAL ARE CONFIDENTIAL AND SHALL REMAIN THE SOLE PROPERTY OF STARBUCKS CORPORATION, WHICH IS THE OWNER OF THE COPYRIGHT IN THIS WORK. THEY SHALL NOT BE REPRODUCED (IN WHOLE OR IN PART), SHARED WITH THIRD PARTIES OR USED IN ANY MANNER ON OTHER PROJECTS OR EXTENSIONS TO THIS PROJECT WITHOUT THE PRIOR WRITTEN CONSENT OF STARBUCKS CORPORATION. THESE DRAWINGS AND SPECIFICATIONS ARE INTENDED TO EXPRESS DESIGN INTENT FOR A PROTOTYPICAL STARBUCKS STORE (WHICH IS SUBJECT TO CHANGE AT ANYTIME) AND DO NOT REFLECT ACTUAL SITE CONDITIONS. NEITHER PARTY SHALL HAVE ANY OBLIGATION NOR LIABILITY TO THE OTHER (EXCEPT STATED ABOVE) UNTIL A WRITTEN AGREEMENT IS FULLY EXECUTED BY BOTH PARTIES.

STARBUCKS TEMPLATE VERSION: i2021-09-13

Design Forum Architects Inc.
2056 Byers Rd
Miamisburg, OH 45342
Tel: (844) 804-7700
Donald J. Rethman
Architect In Charge
License: AR0017303

Design Forum Engineering
2056 Byers Rd
Miamisburg, OH 45342
Tel: (844) 804-7700
Timothy L. Raberding, PE
Professional Engineer
License: 62078

PROJECT NAME:
US 98 & GRIFFIN RD

PROJECT ADDRESS:
3105 US-98 NORTH
LAKELAND, FLORIDA 33801

STORE #:	80004
PROJECT #:	96892-001
ISSUE DATE:	2025-10-10
DESIGNER:	ASHLEY SUEIRAS
PRODUCTION DESIGNER:	ANDY MCLOUD
CHECKED BY:	DONALD RETHMAN

Revision Schedule

Rev	Date	By	Description
2	08/26/25		REV-2

SHEET TITLE:
ADAPTABLE CASEWORK CABINET PLAN
SCALE: 1/2" = 1'-0"

SHEET NUMBER:
I-102.3

10/9/2025 9:54:10 AM C:\Users\julia.gray\Documents\96892-001_80004_US 98 & Griffin Rd, FL_2025_Julia.gray\FRYY6.rvt

ADAPTABLE CASEWORK CABINET SCHEDULE - "C"

DESIGN ID	COUNT	DESCRIPTION	FURN. BY	INST. BY	COMMENTS
CABINET					
17580	2	CABINET - CBE TEA SHELF - 29IN 735MM - FLAT BLACK MT0028	SB	GC	FINISH: MT0028
19281	2	CABINET - ESPRESSO ICE BIN STAINLESS - 20IN 510MM	SB	GC	
21890	26	CABINET - SIDE PANEL	SB	GC	
21891	9	CABINET - BOTTOM SHELF - 15IN 380MM	SB	GC	
21892	6	CABINET - BACK PANEL - 15IN 380MM	SB	GC	
21893	4	CABINET - ADJUSTABLE SHELF - 15IN 380MM	SB	GC	
21894	7	CABINET - DOOR - 15IN 380MM	SB	GC	FINISH: CP0024
21895	5	CABINET - DOOR TRASH - 15IN 380MM	SB	GC	FINISH: CP0024
21896	1	CABINET - DRAWER - 15IN 380MM	SB	GC	FINISH: CP0024
21898	1	CABINET - BOTTOM SHELF - 18IN 455MM	SB	GC	
21899	1	CABINET - BACK PANEL - 18IN 455MM	SB	GC	
21900	1	CABINET - ADJUSTABLE SHELF - 18IN 455MM	SB	GC	
21901	1	CABINET - DOOR - 18IN 455MM	SB	GC	FINISH: CP0024
21902	5	CABINET - BOTTOM SHELF - 30IN 760MM	SB	GC	
21903	1	CABINET - BACK PANEL - 30IN 760MM	SB	GC	
21904	7	CABINET - ADJUSTABLE SHELF - 30IN 760MM	SB	GC	
21905	2	CABINET - DOOR - 30IN 760MM	SB	GC	FINISH: CP0024
21906	1	CABINET - END CAP FRONTBAR	SB	GC	FINISH: CP0024
21907	2	CABINET - END CAP BACKBAR	SB	GC	FINISH: CP0024
21908	4	CABINET - FILLER PANEL - VARIABLE LENGTH	SB	GC	FINISH: CP0024; LENGTH REQUIRED: (V.I.F) (1) 0' - 7" (2) 0' - 4 3/4" (1) 0' - 6 1/4"
21909	1	CABINET - DT POS UPPER CUBBY - 32IN 815MM	SB	GC	FINISH: PL0019
21910	1	CABINET - FRENCH CLEAT - VARIABLE LENGTH	SB	GC	LENGTH REQUIRED: (V.I.F) (1) 2' - 6 1/2"
21912	3	CABINET - BACK PANEL FOR POS - 30IN 760MM	SB	GC	
21913	2	CABINET - EQUIPMENT MOUNTING PANEL	SB	GC	
22632	1	CABINET - CBE DRY INCLUSION SHELF - 44IN 1120MM - FLAT BLACK MT0028	SB	GC	FINISH: MT0028
22749	1	CABINET - ESPRESSO PUMP MOUNT PANEL	SB	GC	
22986	2	CABINET - DELIVERY DRAWER - 15IN 380MM	SB	GC	FINISH: MT0028
CAFE					
20097	5	SHELVING FRAME - 21IN 535MM - HOT ROLLED STEEL MT0011	SB	GC	
2 20117	3	CABINET - 36IN 915MM - WHITE OAK WD0073	SB	GC	
20372	1	WALL BAY ON STANDARD 1 UNIT - 36IN 915MM - WHITE OAK WD0073	SB	GC	
20375	1	WALL BAY ON STANDARD 2 UNIT - 72IN 1830MM - WHITE OAK WD0073	SB	GC	
20381	1	FREESTANDING 1 UNIT SHORT - 18IN 455MM - WHITE OAK WD0073	SB	GC	
23964	1	WASTE AND RECYCLE STATION THREE DROP - GOLDEN BLONDE AND WHITE PL0027 CP0002	SB	GC	
OTHER					
10829	9	CORNER GUARD - .75IN 19MM	SB	GC	LOCATED @ BOH SST
11155	2	ESPRESSO MACHINE PUMP MOUNT - 10X10IN 255X255MM	SB	GC	
21914	8	FRIDGE STOP BRACKET SET	SB	GC	
X5012	1	CUSTOM DT WINDOW SILL TOP	SB	GC	FINISH: CP0005; SEE DETAIL: 5/I-509
X5014	1	CUSTOM SOLID WOOD CAP AT RR VESTIBULE	SB	GC	FINISH: WD0073; SEE DETAIL: 13/I-502; PROVIDED BY CASEWORK VENDOR
X5022	1	CUSTOM WOOD TRIM AT MERCH	SB	GC	FINISH: WD0073; SEE DETAIL: 17/I-502; PROVIDED BY CASEWORK VENDOR
X5023	1	CUSTOM WOOD TRIM AT MERCH	SB	GC	FINISH: WD0073; SEE DETAIL: 18/I-502; PROVIDED BY CASEWORK VENDOR
X5024	3	CUSTOM WOOD FLOATING SHELF AT BACKBAR; FINISH: WALNUT VENEER (WD0077 MAD107)	SB	GC	FINISH: WD0073; SEE DETAIL: 1/I-514; PROVIDED BY CASEWORK VENDOR; LENGTH REQUIRED: (V.I.F) (2) 3' - 8" (1) 5' - 11"
X5026	1	CUSTOM SOLID WOOD CAP AT STOREFRONT	SB	GC	FINISH: WD0073; SEE DETAIL: 2/I-107; PROVIDED BY CASEWORK VENDOR
X5030	3	FRY REGLET "Y" TRIM AT WOOD CLADDING EDGE	SB	GC	FINISH: BLACK; SEE DETAIL: 11/I-502; LOCATED @ CAFE 1/4" POST OUTSIDE CORNER TRIM; MODEL: 1/2" - MWPOSC2550, FINISH: STANDARD POWDER COAT - BLACK. GC TO VERIFY LENGTHS
PANEL					
21933	2	FINISH PANEL - VARIABLE LENGTH	SB	GC	FINISH: WD0073 (MAD 200)
24287	1	FINISH PANEL - HOS - VARIABLE LENGTH	SB	GC	FINISH: WD0073 (MAD 200)
X5002	1	CUSTOM FINISH PANEL - SIT-HERE ROUNDED	SB	GC	FINISH: WD0073 (MAD 200); SEE DETAIL: 1/I-507

FOR CONSTRUCTION

© 2019 STARBUCKS COFFEE COMPANY

STARBUCKS®
2401 UTAH AVENUE SOUTH
SEATTLE, WASHINGTON 98134
(206) 318-1575

THESE DRAWINGS AND THE PROJECT MANUAL ARE CONFIDENTIAL AND SHALL REMAIN THE SOLE PROPERTY OF STARBUCKS CORPORATION, WHICH IS THE OWNER OF THE COPYRIGHT IN THIS WORK. THEY SHALL NOT BE REPRODUCED (IN WHOLE OR IN PART), SHARED WITH THIRD PARTIES OR USED IN ANY MANNER ON OTHER PROJECTS OR EXTENSIONS TO THIS PROJECT WITHOUT THE PRIOR WRITTEN CONSENT OF STARBUCKS CORPORATION. THESE DRAWINGS AND SPECIFICATIONS ARE INTENDED TO EXPRESS DESIGN INTENT FOR A PROTOTYPICAL STARBUCKS STORE (WHICH IS SUBJECT TO CHANGE AT ANYTIME) AND DO NOT REFLECT ACTUAL SITE CONDITIONS. NEITHER PARTY SHALL HAVE ANY OBLIGATION NOR LIABILITY TO THE OTHER (EXCEPT STATED ABOVE) UNTIL A WRITTEN AGREEMENT IS FULLY EXECUTED BY BOTH PARTIES.

STARBUCKS TEMPLATE VERSION: i2021-09-13

Design Forum Architects Inc.
2056 Byers Rd
Miamisburg, OH 45342
Tel: (844) 804-7700
Donald J. Rethman
Architect In Charge
License: AR0017303

Design Forum Engineering
2056 Byers Rd
Miamisburg, OH 45342
Tel: (844) 804-7700
Timothy L. Raberding, PE
Professional Engineer
License: 62078

PROJECT NAME:
US 98 & GRIFFIN RD

PROJECT ADDRESS:
3105 US-98 NORTH
LAKELAND, FLORIDA 33801

STORE #: 80004
PROJECT #: 96892-001
ISSUE DATE: 2025-10-10
DESIGNER: ASHLEY SUEIRAS
PRODUCTION DESIGNER: ANDY MCLOUD
CHECKED BY: DONALD RETHMAN

Revision Schedule

Rev	Date	By	Description
2	08/26/25		REV-2

SHEET TITLE:
ADAPTABLE CASEWORK CABINET SCHEDULE
SCALE: NO SCALE

SHEET NUMBER:
I-102.3.1

10/9/2025 9:54:10 AM C:\Users\julia.gray\Documents\96892-001_80004_US 98 & Griffin Rd, FL_2025_Julia.gravFRYY6.rvt

ADAPTABLE CASEWORK COUNTERTOP SCHEDULE - "C"

DESIGN ID	COUNT	DESCRIPTION	FURN. BY	INST. BY	COMMENTS
COUNTERTOP					
21928	2	COUNTERTOP - END CAP BACKBAR	SB	GC	FINISH: CP0005
22354	1	COUNTERTOP - ESPRESSO SHROUD - 141IN 3580MM	SB	GC	FINISH: CP0005
22395	2	COUNTERTOP - HAND SINK LOW SPLASH - 15IN 380MM	SB	GC	
X5001	1	CUSTOM COUNTERTOP - SIT-HERE	SB	GC	FINISH: CP0005; SEE DETAIL: 2/I-507; 2IN CHAMFERED EDGE
X5004	1	CUSTOM COUNTERTOP - HOS FRONTBAR - 76IN 1930MM	SB	GC	FINISH: CP0005; SIM. DID# 24281; CUSTOM DUE TO 2IN CHAMFERED EDGE
X5005	1	CUSTOM COUNTERTOP - ESPRESSO FRONTBAR - LF - 141IN 3580MM	SB	GC	FINISH: CP0005; SIM. DID# 22352; CUSTOM DUE TO 2IN CHAMFERED EDGE
X5006	1	CUSTOM COUNTERTOP - POS - 84IN 2135MM	SB	GC	FINISH: CP0005; SIM. DID# 22361; CUSTOM DUE TO 2IN CHAMFERED EDGE
X5007	1	CUSTOM COUNTERTOP - END CAP FRONTBAR	SB	GC	FINISH: CP0005; SIM. DID# 21923; CUSTOM DUE TO 2IN CHAMFERED EDGE
X5008	1	CUSTOM COUNTERTOP - 8IN BACKSPLASH - ARIABLE LENGTH	SB	GC	FINISH: CP0005; SEE DETAIL: 6/I-509; LENGTH REQUIRED: (V.I.F) (1) 2' - 6 1/2"
X5009	1	CUSTOM COUNTERTOP - CBE - RF - 152IN 3860MM	SB	GC	FINISH: CP0005; SIM. DID# 22636; CUSTOM DUE TO 8IN INTEGRAL BACKSPLASH
X5010	1	CUSTOM COUNTERTOP - BACKBAR - 15IN 380MM	SB	GC	FINISH: CP0005; SIM. DID# 21925; CUSTOM DUE TO NO INTEGRAL BACKSPLASH
X5011	3	CUSTOM COUNTERTOP - 2IN BACKSPLASH - VARIABLE LENGTH	SB	GC	FINISH: CP0005; SEE DETAIL: 5/I-509; LENGTH REQUIRED: (V.I.F) (2) 2' - 6 1/2" (1) 1' - 7 1/2"
X5015	1	CUSTOM DT ADD COUNTERTOP - 31IN 788MM	SB	GC	FINISH: CP0005; SEE DETAIL: 6/I-514; SIM. DID# 21919; CUSTOM DUE TO 8IN INTEGRAL BACKSPLASH

ADAPTABLE CASEWORK COUNTERTOP SCHEDULE - "C"

DESIGN ID	COUNT	DESCRIPTION	FURN. BY	INST. BY	COMMENTS
X5016	1	CUSTOM COUNTERTOP - BACKBAR - 18IN 455MM	SB	GC	FINISH: CP0005; SIM. DID# 21926; CUSTOM DUE TO 8IN INTEGRAL BACKSPLASH
X5017	3	CUSTOM COUNTERTOP - FILLER BACKBAR - VARIABLE LENGTH	SB	GC	FINISH: CP0005; SIM. DID# 21919; CUSTOM DUE TO 8IN INTEGRAL BACKSPLASH; LENGTH REQUIRED: (V.I.F) (1) 0' - 7 3/4" (1) 0' - 5 1/4" (1) 0' - 0 3/4"
X5018	1	CUSTOM COUNTERTOP - FILLER BACKBAR - VARIABLE LENGTH	SB	GC	FINISH: CP0005; SIM. DID# 22636; CUSTOM DUE TO NO INTEGRAL BACKSPLASH; LENGTH REQUIRED: (V.I.F) (1) 0' - 4 3/4"
X5019	1	CUSTOM COUNTERTOP - DT POS - LF - 68IN 1727MM	SB	GC	FINISH: CP0005; SEE DETAIL: 5/I-514; SIM. DID# 22364; CUSTOM DUE TO WIDTH AND 8IN INTEGRAL BACKSPLASH
X5020	1	CUSTOM COUNTERTOP - BREW - LF - 90IN 2285MM	SB	GC	FINISH: CP0005; SIM. DID# 22328; CUSTOM DUE TO 8IN INTEGRAL BACKSPLASH
X5021	1	CUSTOM COUNTERTOP - WARMING - LF - 92IN 2335MM	SB	GC	FINISH: CP0005; SIM. DID# 22376; CUSTOM DUE TO 8IN INTEGRAL BACKSPLASH

GENERAL NOTES

A. SEE SHEET I-103 FOR COMPLETE CASEWORK SCHEDULE.

B. G.C.'S INSTALLER SHALL VERIFY COUNTER CHANNEL REQUIREMENTS PRIOR TO CUTTING IN FIELD.

C. G.C./INSTALLER TO VERIFY COUNTERTOP SUPPORT CHANNEL MEASUREMENTS PRIOR TO CUTTING. FIELD CUT AT SINKS AND ICE BINS.

D. "C" CHANNEL MOUNTS OVER FRONT AND REAR INDEX BRACKETS WHICH ARE INSERTED INTO FRAMEWORK.

E. SILICONE SEAM AT TRANSITION FROM COUNTERTOP TO HAND SINKS.

F. SILICONE AND SEAL ALL SEAMS BETWEEN SINKS, EQUIPMENT AND COUNTERTOPS.

G. ONCE COUNTERTOP IS SET, LEVELED AND SEAMED, SECURE CHANNEL TO UNDERSIDE OF SUBSTRATE.

KEYED NOTES

1. CASEWORK FRAME BELOW.
2. LOCATE WATER TROUGH AT EDGE OF COUNTERTOP AS SHOWN.
3. RAISED EDGE GROMMETS.
4. CORIAN SHROUD AT ESPRESSO BAR.
5. CUT OUT FOR RECESSED SINK, ICE BIN OR TRASH DROP. SEE EQUIPMENT AND/OR MANUFACTURER'S CUTSHEETS FOR DIMENSIONS.
6. FOOD CASE.
7. CUT OUT FOR NITRO.

LEGEND

INDICATES STAINLESS STEEL (SST) COUNTERTOP

INDICATES SOLID SURFACE (SS) COUNTERTOP

RESPONSIBILITY LEGEND

FURN. BY	INST. BY
SB - FURNISHED BY STARBUCKS	GC - INSTALLED BY GENERAL CONTRACTOR
GC - FURNISHED BY GENERAL CONTRACTOR	SB - INSTALLED BY STARBUCKS
VD - FURNISHED BY VENDOR	VD - INSTALLED BY VENDOR

NOTE: ALL RESPONSIBILITIES TO BE CONFIRMED WITH STARBUCKS CONSTRUCTION MANAGER PRIOR TO ORDERING / CONSTRUCTION.

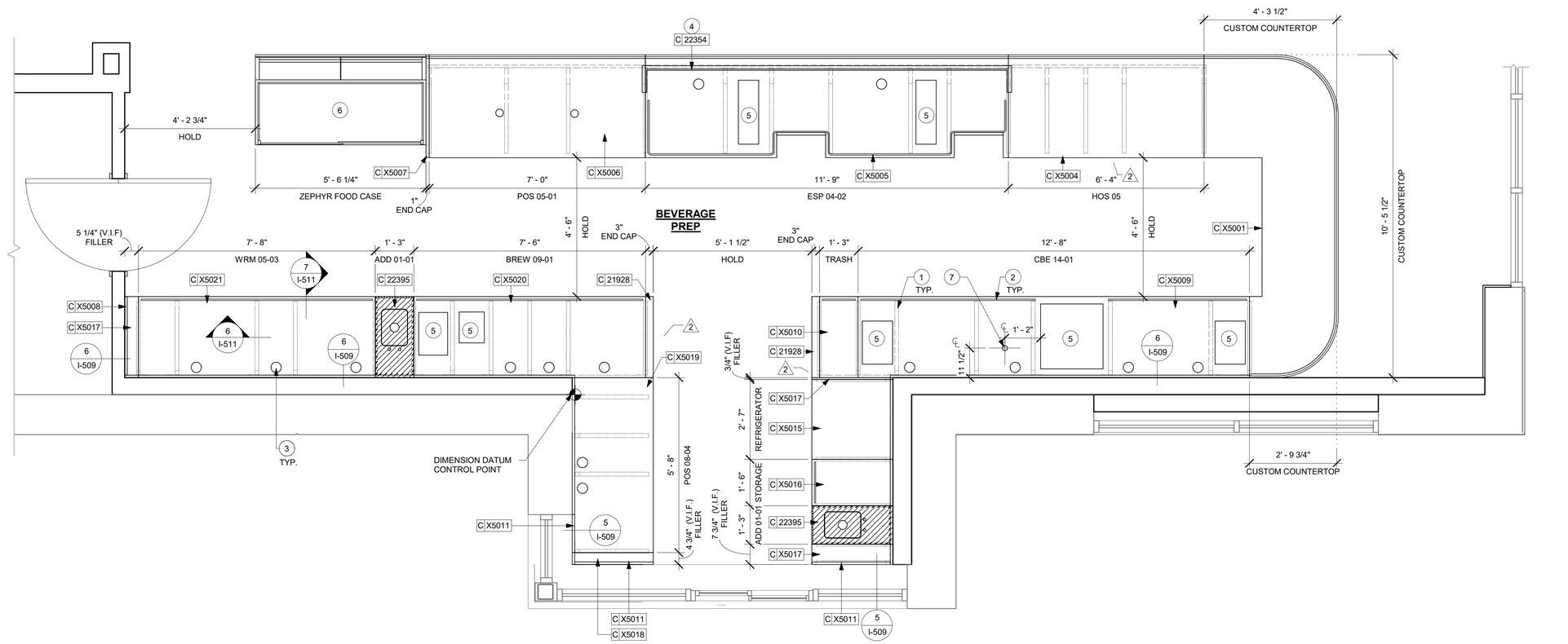

1 ADAPTABLE CASEWORK COUNTERTOP PLAN
Scale: 1/2" = 1'-0"

FOR CONSTRUCTION

© 2019 STARBUCKS COFFEE COMPANY

STARBUCKS®
2401 UTAH AVENUE SOUTH
SEATTLE, WASHINGTON 98134
(206) 318-1575

THESE DRAWINGS AND THE PROJECT MANUAL ARE CONFIDENTIAL AND SHALL REMAIN THE SOLE PROPERTY OF STARBUCKS CORPORATION, WHICH IS THE OWNER OF THE COPYRIGHT IN THIS WORK. THEY SHALL NOT BE REPRODUCED (IN WHOLE OR IN PART), SHARED WITH THIRD PARTIES OR USED IN ANY MANNER ON OTHER PROJECTS OR EXTENSIONS TO THIS PROJECT WITHOUT THE PRIOR WRITTEN CONSENT OF STARBUCKS CORPORATION. THESE DRAWINGS AND SPECIFICATIONS ARE INTENDED TO EXPRESS DESIGN INTENT FOR A PROTOTYPICAL STARBUCKS STORE (WHICH IS SUBJECT TO CHANGE AT ANYTIME) AND DO NOT REFLECT ACTUAL SITE CONDITIONS. NEITHER PARTY SHALL HAVE ANY OBLIGATION NOR LIABILITY TO THE OTHER (EXCEPT STATED ABOVE) UNTIL A WRITTEN AGREEMENT IS FULLY EXECUTED BY BOTH PARTIES.

STARBUCKS TEMPLATE VERSION: i2021-09-13

Design Forum Architects Inc.
2056 Byers Rd
Miamisburg, OH 45342
Tel: (844) 804-7700
Donald J. Rethman
Architect In Charge
License: AR0017303

Design Forum Engineering
2056 Byers Rd
Miamisburg, OH 45342
Tel: (844) 804-7700
Timothy L. Raberding, PE
Professional Engineer
License: 62078

PROJECT NAME:
US 98 & GRIFFIN RD

PROJECT ADDRESS:
3105 US-98 NORTH
LAKELAND, FLORIDA 33801

STORE #:	80004
PROJECT #:	96892-001
ISSUE DATE:	2025-10-10
DESIGNER:	ASHLEY SUEIRAS
PRODUCTION DESIGNER:	ANDY MCLOUD
CHECKED BY:	DONALD RETHMAN

Revision Schedule

Rev	Date	By	Description
2	08/26/25		REV-2

SHEET TITLE:
ADAPTABLE CASEWORK COUNTERTOP PLAN
SCALE: 1/2" = 1'-0"

SHEET NUMBER:
I-102.4

10/9/2025 9:54:11 AM C:\Users\julia.gray\Documents\96892-001_80004_US 98 & Griffin Rd, FL_2025_Julia.gray\FRYY6.rvt

CASEWORK SCHEDULE - "C"

DESIGN ID	COUNT	DESCRIPTION	FURN. BY	INST. BY	COMMENTS
CABINET					
17580	2	CABINET - CBE TEA SHELF - 29IN 735MM - FLAT BLACK MT0028	SB	GC	FINISH: MT0028
19281	2	CABINET - ESPRESSO ICE BIN STAINLESS - 20IN 510MM	SB	GC	
21890	26	CABINET - SIDE PANEL	SB	GC	
21891	9	CABINET - BOTTOM SHELF - 15IN 380MM	SB	GC	
21892	6	CABINET - BACK PANEL - 15IN 380MM	SB	GC	
21893	4	CABINET - ADJUSTABLE SHELF - 15IN 380MM	SB	GC	
21894	7	CABINET - DOOR - 15IN 380MM	SB	GC	FINISH: CP0024
21895	5	CABINET - DOOR TRASH - 15IN 380MM	SB	GC	FINISH: CP0024
21896	1	CABINET - DRAWER - 15IN 380MM	SB	GC	FINISH: CP0024
21898	1	CABINET - BOTTOM SHELF - 18IN 455MM	SB	GC	
21899	1	CABINET - BACK PANEL - 18IN 455MM	SB	GC	
21900	1	CABINET - ADJUSTABLE SHELF - 18IN 455MM	SB	GC	
21901	1	CABINET - DOOR - 18IN 455MM	SB	GC	FINISH: CP0024
21902	5	CABINET - BOTTOM SHELF - 30IN 760MM	SB	GC	
21903	1	CABINET - BACK PANEL - 30IN 760MM	SB	GC	
21904	7	CABINET - ADJUSTABLE SHELF - 30IN 760MM	SB	GC	
21905	2	CABINET - DOOR - 30IN 760MM	SB	GC	FINISH: CP0024
21906	1	CABINET - END CAP FRONTBAR	SB	GC	FINISH: CP0024
21907	2	CABINET - END CAP BACKBAR	SB	GC	FINISH: CP0024
21908	4	CABINET - FILLER PANEL - VARIABLE LENGTH	SB	GC	FINISH: CP0024; LENGTH REQUIRED: (V.I.F) (1) 0' - 7" (2) 0' - 4 3/4" (1) 0' - 6 1/4"
21909	1	CABINET - DT POS UPPER CUBBY - 32IN 815MM	SB	GC	FINISH: PL0019
21910	1	CABINET - FRENCH CLEAT - VARIABLE LENGTH	SB	GC	LENGTH REQUIRED: (V.I.F) (1) 2' - 6 1/2"
21912	3	CABINET - BACK PANEL FOR POS - 30IN 760MM	SB	GC	
21913	2	CABINET - EQUIPMENT MOUNTING PANEL	SB	GC	
22632	1	CABINET - CBE DRY INCLUSION SHELF - 44IN 1120MM - FLAT BLACK MT0028	SB	GC	FINISH: MT0028
22749	1	CABINET - ESPRESSO PUMP MOUNT PANEL	SB	GC	
22986	2	CABINET - DELIVERY DRAWER - 15IN 380MM	SB	GC	FINISH: MT0028
CAFE					
20097	5	SHELVING FRAME - 21IN 535MM - HOT ROLLED STEEL MT0011	SB	GC	
20117	3	CABINET - 36IN 915MM - WHITE OAK WD0073	SB	GC	
20372	1	WALL BAY ON STANDARD 1 UNIT - 36IN 915MM - WHITE OAK WD0073	SB	GC	
20375	1	WALL BAY ON STANDARD 2 UNIT - 72IN 1830MM - WHITE OAK WD0073	SB	GC	
20381	1	FREESTANDING 1 UNIT SHORT - 18IN 455MM - WHITE OAK WD0073	SB	GC	
23964	1	WASTE AND RECYCLE STATION THREE DROP - GOLDEN BLONDE AND WHITE PL0027 CP0002	SB	GC	
COUNTERTOP					
21928	2	COUNTERTOP - END CAP BACKBAR	SB	GC	FINISH: CP0005
22354	1	COUNTERTOP - ESPRESSO SHROUD - 141IN 3580MM	SB	GC	FINISH: CP0005
22395	2	COUNTERTOP - HAND SINK LOW SPLASH - 15IN 380MM	SB	GC	
X5001	1	CUSTOM COUNTERTOP - SIT-HERE	SB	GC	FINISH: CP0005; SEE DETAIL: 2/I-507; 2IN CHAMFERED EDGE
X5004	1	CUSTOM COUNTERTOP - HOS FRONTBAR - 76IN 1930MM	SB	GC	FINISH: CP0005; SIM. DID# 24281; CUSTOM DUE TO 2IN CHAMFERED EDGE
X5005	1	CUSTOM COUNTERTOP - ESPRESSO FRONTBAR - LF - 141IN 3580MM	SB	GC	FINISH: CP0005; SIM. DID# 22352; CUSTOM DUE TO 2IN CHAMFERED EDGE
X5006	1	CUSTOM COUNTERTOP - POS - 84IN 2135MM	SB	GC	FINISH: CP0005; SIM. DID# 22361; CUSTOM DUE TO 2IN CHAMFERED EDGE
X5007	1	CUSTOM COUNTERTOP - END CAP FRONTBAR	SB	GC	FINISH: CP0005; SIM. DID# 21923; CUSTOM DUE TO 2IN CHAMFERED EDGE
X5008	1	CUSTOM COUNTERTOP - 8IN BACKSPLASH - ARIABLE LENGTH	SB	GC	FINISH: CP0005; SEE DETAIL: 6/I-509; LENGTH REQUIRED: (V.I.F) (1) 2' - 6 1/2"
X5009	1	CUSTOM COUNTERTOP - CBE - RF - 152IN 3860MM	SB	GC	FINISH: CP0005; SIM. DID# 22636; CUSTOM DUE TO 8IN INTEGRAL BACKSPLASH
X5010	1	CUSTOM COUNTERTOP - BACKBAR - 15IN 380MM	SB	GC	FINISH: CP0005; SIM. DID# 21925; CUSTOM DUE TO NO INTEGRAL BACKSPLASH
X5011	3	CUSTOM COUNTERTOP - 2IN BACKSPLASH - VARIABLE LENGTH	SB	GC	FINISH: CP0005; SEE DETAIL: 5/I-509; LENGTH REQUIRED: (V.I.F) (2) 2' - 6 1/2" (1) 1' - 7 1/2"
X5015	1	CUSTOM DT ADD COUNTERTOP - 31IN 788MM	SB	GC	FINISH: CP0005; SEE DETAIL: 6/I-514; SIM. DID# 21919; CUSTOM DUE TO 8IN INTEGRAL BACKSPLASH
X5016	1	CUSTOM COUNTERTOP - BACKBAR - 18IN 455MM	SB	GC	FINISH: CP0005; SIM. DID# 21926; CUSTOM DUE TO 8IN INTEGRAL BACKSPLASH
X5017	3	CUSTOM COUNTERTOP - FILLER BACKBAR - VARIABLE LENGTH	SB	GC	FINISH: CP0005; SIM. DID# 21919; CUSTOM DUE TO 8IN INTEGRAL BACKSPLASH; LENGTH REQUIRED: (V.I.F) (1) 0' - 7 3/4" (1) 0' - 5 1/4" (1) 0' - 0 3/4"
X5018	1	CUSTOM COUNTERTOP - FILLER BACKBAR - VARIABLE LENGTH	SB	GC	FINISH: CP0005; SIM. DID# 22636; CUSTOM DUE TO NO INTEGRAL BACKSPLASH; LENGTH REQUIRED: (V.I.F) (1) 0' - 4 3/4"
X5019	1	CUSTOM COUNTERTOP - DT POS - LF - 68IN 1727MM	SB	GC	FINISH: CP0005; SEE DETAIL: 5/I-514; SIM. DID# 22364; CUSTOM DUE TO WIDTH AND 8IN INTEGRAL BACKSPLASH
X5020	1	CUSTOM COUNTERTOP - BREW - LF - 90IN 2285MM	SB	GC	FINISH: CP0005; SIM. DID# 22328; CUSTOM DUE TO 8IN INTEGRAL BACKSPLASH
X5021	1	CUSTOM COUNTERTOP - WARMING - LF - 92IN 2335MM	SB	GC	FINISH: CP0005; SIM. DID# 22376; CUSTOM DUE TO 8IN INTEGRAL BACKSPLASH
DIEWALL					
21885	13	DIEWALL - FRAMING - VARIABLE LENGTH	SB	GC	
21886	3	DIEWALL - BASE - VARIABLE LENGTH	SB	GC	

CASEWORK SCHEDULE - "C"

DESIGN ID	COUNT	DESCRIPTION	FURN. BY	INST. BY	COMMENTS
21887	3	DIEWALL - SUBSTRATE PANEL - VARIABLE LENGTH	SB	GC	
21888	42	DIEWALL - SUPPORT LEG	SB	GC	
X5003	1	CUSTOM DIEWALL - SIT-HERE ROUNDED	SB	GC	SEE DETAIL: 1/I-507
OTHER					
10829	9	CORNER GUARD - .75IN 19MM	SB	GC	LOCATED @ BOH SST
11155	2	ESPRESSO MACHINE PUMP MOUNT - 10X10IN 255X255MM	SB	GC	
21914	8	FRIDGE STOP BRACKET SET	SB	GC	
X5012	1	CUSTOM DT WINDOW SILL TOP	SB	GC	FINISH: CP0005; SEE DETAIL: 5/I-509
X5014	1	CUSTOM SOLID WOOD CAP AT RR VESTIBULE	SB	GC	FINISH: WD0073; SEE DETAIL: 13/I-502; PROVIDED BY CASEWORK VENDOR
X5022	1	CUSTOM WOOD TRIM AT MERCH	SB	GC	FINISH: WD0073; SEE DETAIL: 17/I-502; PROVIDED BY CASEWORK VENDOR
X5023	1	CUSTOM WOOD TRIM AT MERCH	SB	GC	FINISH: WD0073; SEE DETAIL: 18/I-502; PROVIDED BY CASEWORK VENDOR
X5024	3	CUSTOM WOOD FLOATING SHELF AT BACKBAR; FINISH: WALNUT VENEER (WD0077 MAD107)	SB	GC	FINISH: WD0073; SEE DETAIL: 1/I-514; PROVIDED BY CASEWORK VENDOR; LENGTH REQUIRED: (V.I.F) (2) 3' - 8" (1) 5' - 11"
X5026	1	CUSTOM SOLID WOOD CAP AT STOREFRONT	SB	GC	FINISH: WD0073; SEE DETAIL: 2/I-107; PROVIDED BY CASEWORK VENDOR
X5030	3	FRY REGLET "Y" TRIM AT WOOD CLADDING EDGE	SB	GC	FINISH: BLACK; SEE DETAIL: 11/I-502; LOCATED @ CAFE 1/4" POST OUTSIDE CORNER TRIM; MODEL: 1/2" - MWPOSC2550, FINISH: STANDARD POWDER COAT - BLACK. GC TO VERIFY LENGTHS
PANEL					
21933	2	FINISH PANEL - VARIABLE LENGTH	SB	GC	FINISH: WD0073 (MAD 200)
24287	1	FINISH PANEL - HOS - VARIABLE LENGTH	SB	GC	FINISH: WD0073 (MAD 200)
X5002	1	CUSTOM FINISH PANEL - SIT-HERE ROUNDED	SB	GC	FINISH: WD0073 (MAD 200); SEE DETAIL: 1/I-507

CW FINISH - NCS

LOCATION	DESCRIPTION	FINISH CODE	COMMENTS
CABINETS			
DT POS CUBBY	PLASTIC LAMINATE - MOTTLED BLACK	PL0019	
UNDERCOUNTER CABINET BACKBAR	COMPOSITE - BLACK DIAMOND PAPERSTONE	CP0024	
UNDERCOUNTER CABINET FRONTBAR	COMPOSITE - BLACK DIAMOND PAPERSTONE	CP0024	
UNDERCOUNTER CABINET INTERIOR	PLASTIC LAMINATE - WHITE HDPE	PL0043	
CAFE			
WASTE & RECYCLE STATION TOP	COMPOSITE - WHITE WITH VEINING	CP0002	
COUNTERTOPS - BACKBAR			
ADD, FILLER, CBE AND NITRO COUNTERTOPS	COMPOSITE - BLACK WITH FLECKS	CP0005	
DT POS, BREW AND WARM COUNTERTOPS	COMPOSITE - BLACK WITH FLECKS	CP0005	
HAND SINK COUNTERTOP	STAINLESS STEEL - BRUSHED	#4 BRUSHED 16GA SST	
COUNTERTOPS - FRONT BAR			
ESPRESSO AND POS COUNTERTOPS	COMPOSITE - BLACK WITH FLECKS	CP0005	
HOS, END CAP AND ADD COUNTERTOPS	COMPOSITE - BLACK WITH FLECKS	CP0005	
FINISH PANELS			
ESPRESSO AND POS FINISH PANELS	WOOD - WHITE OAK - ROUNDED SLAT - VERTICAL	WD0073	MAD200-V
FINISH PANEL TRIM DETAIL	METAL - HOT ROLLED STEEL	MT0011	
HOS, END CAP AND ADD FINISH PANELS	WOOD - WHITE OAK - ROUNDED SLAT - VERTICAL	WD0073	MAD200-V
WASTE & RECYCLE STATION FINISH PANELS	PLASTIC LAMINATE - GOLDEN BLONDE	PL0027	MAD100-H
OTHER			
DT WINDOW SILL TOP	COMPOSITE - BLACK WITH FLECKS	CP0005	
SHROUD	COMPOSITE - BLACK WITH FLECKS	CP0005	
WOOD CLADDING @ CAFE	WOOD - WHITE OAK - PLANK - VERTICAL	WD0073	MAD100-V
WOOD CLADDING @ SOFFIT	WOOD - WHITE OAK - PLANK - VERTICAL	WD0073	
WOOD TRIM	WOOD - WHITE OAK	WD0073	

RESPONSIBILITY LEGEND

FURN. BY	INST. BY
SB - FURNISHED BY STARBUCKS	GC - INSTALLED BY GENERAL CONTRACTOR
GC - FURNISHED BY GENERAL CONTRACTOR	SB - INSTALLED BY STARBUCKS
VD - FURNISHED BY VENDOR	VD - INSTALLED BY VENDOR

NOTE: ALL RESPONSIBILITIES TO BE CONFIRMED WITH STARBUCKS CONSTRUCTION MANAGER PRIOR TO ORDERING / CONSTRUCTION.

FOR CONSTRUCTION

© 2019 STARBUCKS COFFEE COMPANY

STARBUCKS®
2401 UTAH AVENUE SOUTH
SEATTLE, WASHINGTON 98134
(206) 318-1575

THESE DRAWINGS AND THE PROJECT MANUAL ARE CONFIDENTIAL AND SHALL REMAIN THE SOLE PROPERTY OF STARBUCKS CORPORATION, WHICH IS THE OWNER OF THE COPYRIGHT IN THIS WORK. THEY SHALL NOT BE REPRODUCED (IN WHOLE OR IN PART), SHARED WITH THIRD PARTIES OR USED IN ANY MANNER ON OTHER PROJECTS OR EXTENSIONS TO THIS PROJECT WITHOUT THE PRIOR WRITTEN CONSENT OF STARBUCKS CORPORATION. THESE DRAWINGS AND SPECIFICATIONS ARE INTENDED TO EXPRESS DESIGN INTENT FOR A PROTOTYPICAL STARBUCKS STORE (WHICH IS SUBJECT TO CHANGE AT ANYTIME) AND DO NOT REFLECT ACTUAL SITE CONDITIONS. NEITHER PARTY SHALL HAVE ANY OBLIGATION NOR LIABILITY TO THE OTHER (EXCEPT STATED ABOVE) UNTIL A WRITTEN AGREEMENT IS FULLY EXECUTED BY BOTH PARTIES.

STARBUCKS TEMPLATE VERSION: i2021-09-13

Design Forum Architects Inc.
2056 Byers Rd
Miamisburg, OH 45342
Tel: (844) 804-7700
Donald J. Rethman
Architect In Charge
License: AR0017303

Design Forum Engineering
2056 Byers Rd
Miamisburg, OH 45342
Tel: (844) 804-7700
Timothy L. Raberding, PE
Professional Engineer
License: 62078

PROJECT NAME:
US 98 & GRIFFIN RD

PROJECT ADDRESS:
3105 US-98 NORTH
LAKELAND, FLORIDA 33801

STORE #:	80004
PROJECT #:	96892-001
ISSUE DATE:	2025-10-10
DESIGNER:	ASHLEY SUEIRAS
PRODUCTION DESIGNER:	ANDY MCLOUD
CHECKED BY:	DONALD RETHMAN

Revision Schedule

Rev	Date	By	Description
2	08/26/25		REV-2

SHEET TITLE:
CASEWORK SCHEDULES

SCALE: NO SCALE

SHEET NUMBER:
I-103

10/9/2025 9:54:12 AM C:\Users\julia.gray\Documents\96892-001_80004_US 98 & Griffin Rd, FL_2025_Julia.grayFRYY6.rvt

WALL BASE SCHEDULE - "B"					
DESIGN ID	LENGTH	DESCRIPTION	FURN. BY	INST. BY	COMMENTS
BASE TRIM					
X9100	20' - 2 1/2"	FLOOR FRAME 16 GA 2B SS AROUND CUSTOM WALK-OFF MAT RECESSED	GC	GC	SOURCED FROM VD; SEE DETAIL: 1/I-501
2 X9102	54' - 3"	SCHLUTER BASE - DILEX - AHK - DARK ANTHRACITE OR EQUIVALENT	GC	GC	SCHLUTER SYSTEM WILL REQUIRE USE OF 90 DEGREE CORNER PIECE TO ACCOMODATE FOR RADIUS TRIM PROFILE. FINISH: DARK ANTHRACITE OR EQUIVALENT
METAL BASE					
X9101	39' - 4 1/4"	METAL BASE - 6IN 150MM - BLACK - MT0028	GC	GC	
TILE BASE					
2 19795	207' - 5 1/8"	POLYVINYL TILE BASE SHEET - ECO-GRIP - PEWTER - 6X96IN 150X2438MM	GC	GC	
20218	69' - 7 5/8"	TILE BASE - BLOCK - BLACK - 6X24IN 150X600MM	SB	GC	GROUT: MAPEI - 10 BLACK, OR EQUAL

FLOOR TREATMENT SCHEDULE - "T"					
DESIGN ID	AREA	DESCRIPTION	FURN. BY	INST. BY	COMMENTS
TILE					
2 19795	911 SF	POLYVINYL FLOOR SHEET - ECO-GRIP - PEWTER - 60X96IN 1524X2438MM	GC	GC	2
20230	1319 SF	TILE - I COCCI - GRAPHITE - 24X24IN 600X600MM	SB	GC	GROUT: MAPEI - 10 BLACK
WALK OFF MAT					
19288	39 SF	WALK OFF MAT - HELIX Z1 - BLACK - 12X9IN 305X230MM	SB	GC	PAINT CONCRETE FLOOR UNDER WALK-OFF MAT WITH BLACK PAINT

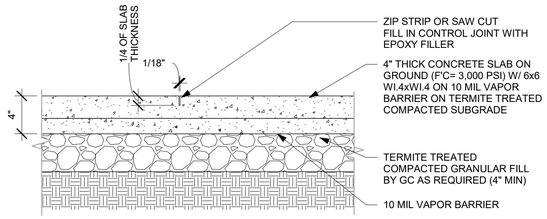

2 TYPICAL CONCRETE SLAB @ CONTROL JOINT DETAIL

Scale: 1 1/2" = 1'-0"

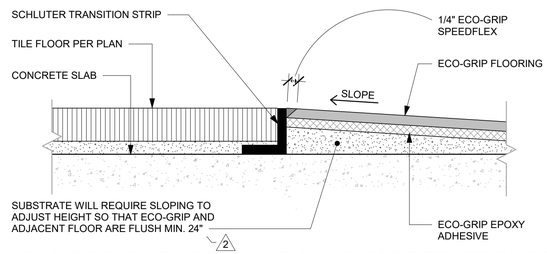

3 ECO-GRIP TO TILE TRANSITION AT FOOT TRAFFIC AREA

Scale: 12" = 1'-0"

FINISHING PROCESS FOR CONCRETE SLAB

- INTEGRAL GRINDING WILL BEGIN AT A MINIMUM OF 36 HYBRID BOND DIAMOND GRIT. AFTER A UNIFORM SCRATCH PATTERN HAS BEEN DEVELOPED IN THE SURFACE OF THE CONCRETE; BEGIN GRINDING THE FLOOR UP TO A DIAMOND GRIT ACCEPTABLE FOR DENSIFING. LEVEL OF FINISH TO BE [OPEN AGGREGATE, SALT & PEPPER, LIGHT SAND]. GC TO HAND GRIND OR USE A STAND-UP EDGER FOR GRINDING/POLISHING EDGE AND INSIDE CORNER CONDITIONS.
- CLEAN FLOOR WITH VEXCON CERTI-SHINE CLEAR DENSIFIER APPLIED IN MULTIPLE COATS.
- AFTER THE DENSIFIER HAS CURED, RINSE THE FLOOR WITH VEXCON CERTI-SHINE FIXATIVE, REMOVING UN-REACTED SILICATES FROM THE SURFACE OF THE CONCRETE AND IMPROVING THE CHEMICAL AND STAIN RESISTANCE OF THE POLISHED CONCRETE SYSTEM.
- ONCE THE RINSE HAS BEEN COMPLETED CONTINUE POLISHING THE FLOOR UP TO A 400 GRIT POLISH.
- CLEAN FLOOR AGAIN AND APPLY A VEXCON CERTISHINE FINISH COAT ULTRA WB IN MULTIPLE COATS. ALLOWING FOR OPTIMAL PENETRATION.
- AFTER THE STAIN PROTECTANT HAS CURED, BURNISH THE FLOOR WITH A HIGH SPEED BUFFER.

RESPONSIBILITY LEGEND

FURN. BY	INST. BY
SB - FURNISHED BY STARBUCKS	GC - INSTALLED BY GENERAL CONTRACTOR
GC - FURNISHED BY GENERAL CONTRACTOR	SB - INSTALLED BY STARBUCKS
VD - FURNISHED BY VENDOR	VD - INSTALLED BY VENDOR

NOTE: ALL RESPONSIBILITIES TO BE CONFIRMED WITH STARBUCKS CONSTRUCTION MANAGER PRIOR TO ORDERING / CONSTRUCTION.

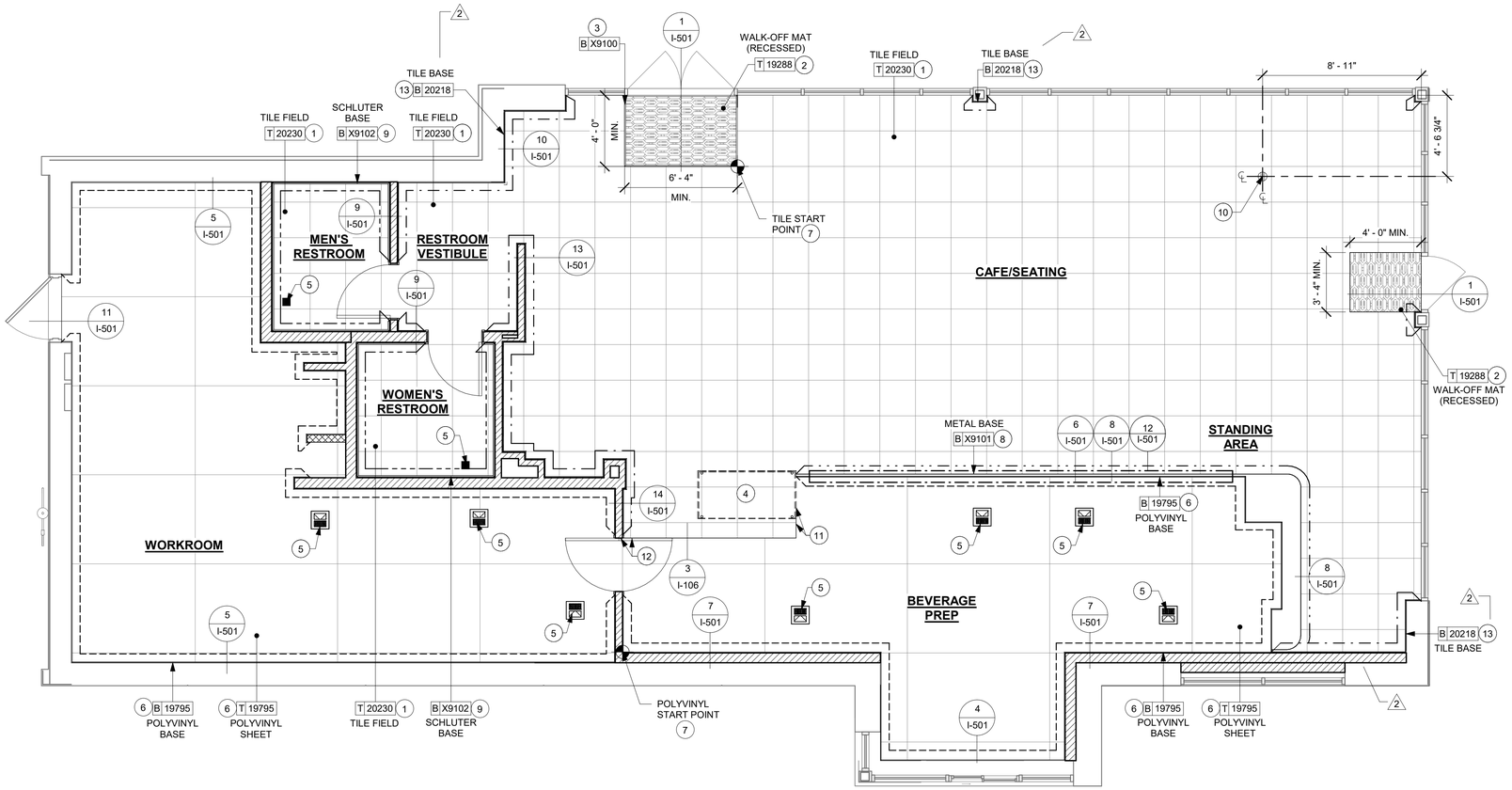

1 FLOOR FINISH PLAN

Scale: 1/4" = 1'-0"

GENERAL NOTES

A. FLOORS, WALLS AND CEILING FINISHES IN FOOD REPARATION AREAS SHALL BE SMOOTH, NON-TOXIC, NON-ABSORBENT, DURABLE AND EASILY CLEANABLE. PAINT SHALL BE WASHABLE; SEMI-GLOSS OR HIGH-GLOSS FINISH.

B. STARBUCKS TO SUPPLY RETAIL FLOOR TILE AND TILE BASE. GENERAL CONTRACTOR TO INSTALL. GENERAL CONTRACTOR TO SUPPLY WORKROOM TILE AND BASE AND INSTALL. GENERAL CONTRACTOR TO SUPPLY AND INSTALL MORTAR, ADHESIVE, AND GROUT. GENERAL CONTRACTOR TO INSPECT ALL TILES AND REJECT DAMAGED OR SUBSTANDARD TILES PRIOR TO INSTALLATION.

C. ALIGN TILE TRANSITIONS ON WHOLE TILES AS SHOWN.

D. ALL FLOOR AND WALL JUNCTIONS IN STORAGE AND FOOD PREPARATION AREAS SHALL HAVE A 6" COVED BASE.

KEYED NOTES

1. INSTALL FLOOR TILE AT CAFE, RESTROOM AND RESTROOM VESTIBULE AS INDICATED.
2. INSTALL HELIX Z1 (FRAME) AND HELIX Z2 (FULL) WALK-OFF MAT AT MAIN ENTRY AS INDICATED. CUT OUT CONCRETE AS REQUIRED PER MANUFACTURER'S SPECIFICATIONS.
3. INSTALL CUSTOM METAL ALUMINUM TRIM AROUND WALK-OFF MAT AS INDICATED.
4. PASTRY CASE FOOTPRINT.
5. FLOOR SINK/ DRAIN LOCATION. SEE BUILDING FLOOR PENETRATION PLAN ON SHEET A-102 AND PLUMBING FOR ADDITIONAL INFORMATION.
6. INSTALL POLYVINYL FLOORING AND BASE AT BACKBAR AND WORKROOM AS INDICATED.
7. POLYVINYL START POINT WHERE INDICATED.
8. INSTALL METAL BASE AT FRONTBAR ENGINE AS INDICATED.
9. INSTALL SCHLUTER BASE AT RESTROOMS AS INDICATED.
10. DUPLEX FLOOR OUTLET. COORDINATE FLOOR RECEPTACLE LOCATION WITH TABLE LEG AND BANQUETTE SEATING.
11. FLOOR TRANSITION ALIGN WITH CASEWORK DIEWALL.
12. FLOOR TRANSITION ALIGN WITH DOOR FRAME.
13. INSTALL TILE BASE AT CAFE AND RESTROOM VESTIBULE AS INDICATED.

LEGEND

	TILE - I COCCI - GRAPHITE - 24X24IN 600X600MM (STACKED)	T 20230
	WALK OFF MAT - HELIX Z1 (FULL) WALK-OFF MAT- BLACK - 12X9IN 305X230MM	T 19288
	POLYVINYL SHEET FLOORING - ECO-GRIP - PEWTER - 60X96IN 1524X2438MM	T 19795
	POLYVINYL TILE BASE - ECO-GRIP - PEWTER - 6X96IN 150X2438MM	B 19795
	METAL BASE - 6IN 150MM - BLACK - MT0028	B X9101
	SCHLUTER COVE BASE - DILEX - AHK TRIM - DARK ANTHRACITE	B X9102
	DATUM POINT	
	TILE BASE - 20218 BLOCK - BLACK 6X24IN -GROUT MAPEI #10	B 20218

FOR CONSTRUCTION

© 2019 STARBUCKS COFFEE COMPANY

STARBUCKS®
2401 UTAH AVENUE SOUTH
SEATTLE, WASHINGTON 98134
(206) 318-1575

THESE DRAWINGS AND THE PROJECT MANUAL ARE CONFIDENTIAL AND SHALL REMAIN THE SOLE PROPERTY OF STARBUCKS CORPORATION, WHICH IS THE OWNER OF THE COPYRIGHT IN THIS WORK. THEY SHALL NOT BE REPRODUCED (IN WHOLE OR IN PART), SHARED WITH THIRD PARTIES OR USED IN ANY MANNER ON OTHER PROJECTS OR EXTENSIONS TO THIS PROJECT WITHOUT THE PRIOR WRITTEN CONSENT OF STARBUCKS CORPORATION. THESE DRAWINGS AND SPECIFICATIONS ARE INTENDED TO EXPRESS DESIGN INTENT FOR A PROTOTYPICAL STARBUCKS STORE (WHICH IS SUBJECT TO CHANGE AT ANYTIME) AND DO NOT REFLECT ACTUAL SITE CONDITIONS. NEITHER PARTY SHALL HAVE ANY OBLIGATION NOR LIABILITY TO THE OTHER (EXCEPT STATED ABOVE) UNTIL A WRITTEN AGREEMENT IS FULLY EXECUTED BY BOTH PARTIES.

STARBUCKS TEMPLATE VERSION: i2021-09-13

Design Forum Architects Inc.
2056 Byers Rd
Miamisburg, OH 45342
Tel: (844) 804-7700
Donald J. Rethman
Architect In Charge
License: AR0017303

Design Forum Engineering
2056 Byers Rd
Miamisburg, OH 45342
Tel: (844) 804-7700
Timothy L. Raberding, PE
Professional Engineer
License: 62078

PROJECT NAME:
US 98 & GRIFFIN RD

PROJECT ADDRESS:
3105 US-98 NORTH
LAKELAND, FLORIDA 33801

STORE #:	80004
PROJECT #:	96892-001
ISSUE DATE:	2025-10-10
DESIGNER:	ASHLEY SUEIRAS
PRODUCTION DESIGNER:	ANDY MCLOUD
CHECKED BY:	DONALD RETHMAN

Revision Schedule

Rev	Date	By	Description
2	08/26/25		REV-2

SHEET TITLE:
FLOOR FINISH PLAN

SCALE: 1/4" = 1'-0"

SHEET NUMBER:
I-106

10/9/2025 9:54:14 AM C:\Users\julia.gray\Documents\96892-001_80004_US 98 & Griffin Rd, FL_2025_Julia.grayFRYY6.rvt

PAINT SCHEDULE

COLOR CODE	DESCRIPTION	LRV	FURN. BY	INST. BY	COMMENTS
SW6991-ES	SW - BLACK MAGIC - EEGSHELL	3	GC	GC	USE PRIMER CP-1
SW7020-ES	SW - BLACK FOX - EGGSHELL	7	GC	GC	USE PRIMER CP-1
SW7020-SG	SW - BLACK FOX - SEMIGLOSS	7	GC	GC	USE PRIMER CP-1
SW7031-ES	SW - MEGA GREIGE - EGGSHELL	37	GC	GC	USE PRIMER CP-1
SW9090-ES	SW - CARAIBE - EGGSHELL	13	GC	GC	USE PRIMER CP-1

WALL TREATMENT (AREA) SCHEDULE - "Q"

DESIGN ID	AREA	DESCRIPTION	FURN. BY	INST. BY	COMMENTS
PLASTIC					
23764	1093 SF	POLYWALL WALLCOVERING	GC	GC	
X9204	135 SF	FRP - BLACK	GC	GC	
TILE					
20229	489 SF	TILE - I COCCI - GRAPHITE - 6X24IN 150X600MM	SB	GC	GROUT: MAPEI - 10 BLACK, OR EQUAL
24599	329 SF	TILE - FLATIRON - OLIVIA - 2 3/8IN X 9 7/16IN 63MMX245MM	SB	GC	GROUT: MAPEI 5007 CHOCOLATE - 3/16"
WALL COVERING					
23815	231 SF	WALL COVERING - FOIL - CAVERN CLAY	SB	GC	A PREMIUM QUALITY PREMIXED FULL STRENGTH COMMERCIAL WALLCOVERING ADHESIVE SHOULD BE APPLIED ONLY TO THE FABRIC SIDE OF THE WALL COVERING. ECO-788 CLAY ADHESIVE OR ECO-888 CLEAR ADHESIVE BY ROMAN IS RECOMMENDED. WALLCOVERING REQUIRES THE USE OF A HEAVY DUTY, PREMIXED VINYL ADHESIVE. DILUTION OF ADHESIVE IS NOT RECOMMENDED. TO BE PROVIDED BY GC.
WALLCOVERING					
24762	133 SF	WALLCOVERING - CAMBRIAN - SLATE	SB	GC	
WOOD CLADDING					
X9201	313 SF	WOOD - WHITE OAK - PLANK - VERTICAL	SB	GC	WD0073 MAD100-V; PROVIDED BY CASEWORK VENDOR

WALL TREATMENT (LENGTH) SCHEDULE- "R"

DESIGN ID	LENGTH	DESCRIPTION	FURN. BY	INST. BY	COMMENTS
TRIM					
X9202	145' - 3 1/4"	SCHLUTER JOLLY TRIM ; BLACK	GC	GC	SEE DETAIL:6 & 8/I-502; FINISH: BLACK
X9203	38' - 4 7/8"	CUSTOM WOOD TRIM - WDOO73 - 1" X 1"	SB	GC	MOUNTED AT 7' - 0"AFF; SEE DETAIL: 6/A-503 PROVIDED BY CASEWORK VENDOR
X9205	10' - 0"	FRY REGLET BLACK TRIM (WCTOSC)	SB	GC	LOCATED @ CAFE SEE DETAIL: 4/I107

RESPONSIBILITY LEGEND

FURN. BY	INST. BY
SB - FURNISHED BY STARBUCKS	GC - INSTALLED BY GENERAL CONTRACTOR
GC - FURNISHED BY GENERAL CONTRACTOR	SB - INSTALLED BY STARBUCKS
VD - FURNISHED BY VENDOR	VD - INSTALLED BY VENDOR

NOTE: ALL RESPONSIBILITIES TO BE CONFIRMED WITH STARBUCKS CONSTRUCTION MANAGER PRIOR TO ORDERING / CONSTRUCTION.

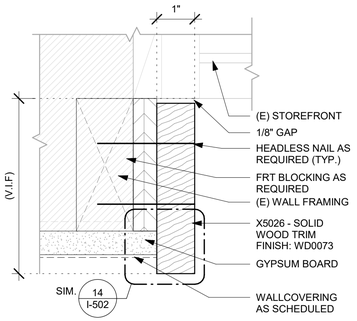

2 WOOD TRIM AT STOREFRONT
Scale: 6" = 1'-0"

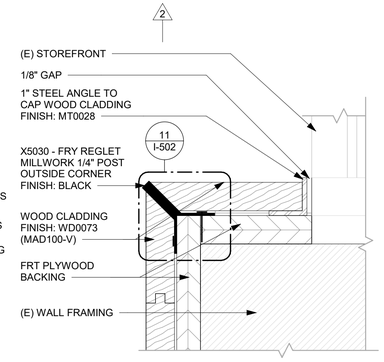

3 WOOD CLADDING END AT STOREFRONT
Scale: 6" = 1'-0"

LEGEND

1	INDICATES PARTIAL HEIGHT - BLACK FRP	Q X9204
2	INDICATES BACKBAR WALL TILE AND JOLLY TRIM ABOVE*	Q 24599 R X9202
3	INDICATES WOOD CLADDING (WD0073 MAD100-V) (FULL HEIGHT PLANK)*	Q X9201
4	INDICATES WALLCOVERING*	Q 24762
5	INDICATES FULL HEIGHT POLYWALL WALLCOVERING*	Q 23764
6	INDICATES WALLCOVERING*	Q 23815
7	INDICATES RESTROOM WALL TILE AND JOLLY TRIM ABOVE**	Q 20227
	SCHLUTER JOLLY TRIM ; METAL: DARK ANTHRACITE	R X9202
	INDICATES HOT ROLLED STEEL CORNER GUARD FOR BOH AND CAFE INSTALL 6" (150mm) TO 42" (1065mm) A.F.F. UNLESS OTHERWISE NOTED.	C 10829 C 10218

* SEE INTERIOR FINISH ELEVATIONS FOR TAGGED LOCATION OF WALL FINISH MATERIAL.

** SEE RESTROOM PLAN & ELEVATIONS FOR TAGGED LOCATION OF WALL FINISH MATERIAL

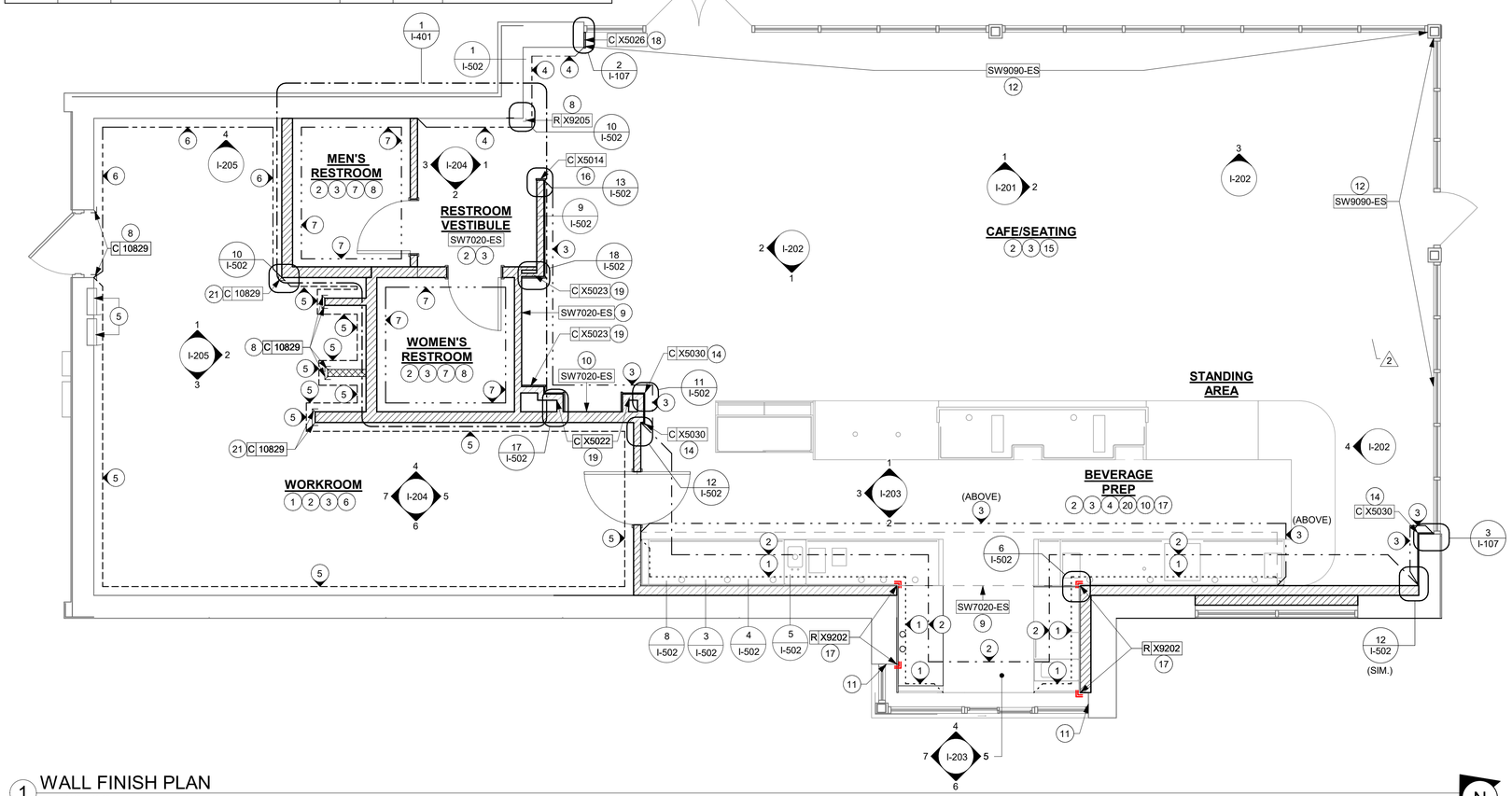

1 WALL FINISH PLAN
Scale: 1/4" = 1'-0"

GENERAL NOTES

A. WORKROOM TO BE FINISHED PER LOCAL CODE REQUIREMENTS.

B. GENERAL CONTRACTOR TO PROVIDE AND INSTALL WORKROOM WALL FINISHES.

C. FLOORS, WALLS AND CEILING FINISHES IN FOOD PREPARATION AREAS SHALL BE SMOOTH, NON-TOXIC, NON-ABSORBENT, DURABLE AND EASILY CLEANABLE. PAINT SHALL BE WASHABLE; SEMI-GLOSS OR HIGH-GLOSS FINISH.

D. CHANGE PAINT COLOR ONLY AT INSIDE CORNERS UNLESS OTHERWISE INDICATED.

E. PAINT SUBSTITUTIONS ARE NOT ALLOWED. USE STARBUCKS' NATIONAL ACCOUNT "COLOR CODE" WHEN .ORDERING PAINTS.

F. PAINT FINISHES SHALL BE APPLIED AS FOLLOWS, UNLESS NOTED OTHERWISE:

a. WOODS AND METAL SURFACES SHALL BE SEMI-GLOSS OR EQUAL.
b. ACCENT AND TRIM PAINTS TO BE SEMI-GLOSS OR EQUAL.
   a. WALL AND CEILING PAINTS TO BE EGGSHELL OR EQUAL.
c. PAINTS IN BOH, RESTROOM(S) OR CAFE BAR SHALL BE SEMI-GLOSS OR EQUAL.

G. ALL WOOD SURFACES (DOORS, TRIM, SHELVES, CABINETRY) SHALL BE SEALED.

H. REFER TO CASEWORK FINISH SCHEDULE FOR CASEWORK FINISH MATERIAL INFORMATION.

I. REFER TO INTERIOR FINISH ELEVATIONS FOR ARTWORK/ GRAPHICS LOCATIONS.

J. REFER TO MANUFACTURER'S INSTRUCTIONS INCLUDED WITH ARTWORK/GRAPHICS FOR PROPER INSTALLATION.

K. ALL FLOOR AND WALL JUNCTIONS IN STORAGE AND FOOD PREPARATION AREAS SHALL HAVE A 6" COVED BASE.

L. INSTALL BLOCKING AND HANGERS FOR WALL SHELVING BEFORE INSTALLING BACK BAR TILE.

KEYED NOTES

1. INSTALL FULL HEIGHT POLYWALL WALLCOVERING AT WORKROOM WALLS AS INDICATED.
2. PROVIDE FIRE TREATED BLOCKING AS REQUIRED TO SUPPORT WALL ATTACHMENTS (SEE BUILDING FLOOR PLAN ON SHEET A-101 FOR MORE INFORMATION).
3. REFER TO SHEET I-502 FOR WALL FINISH DETAILS.
4. POLYWALL WALLCOVERING BENEATH BACKBAR AT EXPOSED WALLS EXTEND FROM TOP OF WALL BASE TO UNDERSIDE OF COUNTERTOP.
5. ELECTRICAL PANEL. GC CONFIRM WITH WL AS INDICATED. MAINTAIN MINIMUM CLEARANCES AS REQUIRED BY CODE. REFER TO ELECTRICAL DRAWINGS.
6. MOP SINK. FULL HEIGHT FRP AT ENCLOSURE (SEE PLUMBING PLANS FOR MORE INFORMATION).
7. INSTALL WALL TILE AT RESTROOMS AS INDICATED.
8. INSTALL CORNER TRIM DETAIL AT WALLCOVERING AS INDICATED. SEE DETAILS: 10/I-502.
9. PAINT WALL AS INDICATED ON INTERIOR FINISH ELEVATIONS.
10. GC TO INSTALL BACKBAR WALL TILE AS INDICATED ON INTERIOR FINISH ELEVATIONS.
11. BACKBAR TILE TO RETURN TO MULLIONS WITHIN DRIVE-THRU WINDOW OPENING AS INDICATED.
12. PAINT WALL ABOVE STOREFRONT GLAZING AS INDICATED ON INTERIOR FINISH ELEVATIONS.
13. NOT USED.
14. INSTALL FRY REGLET "Y" TRIM AS INDICATED.
15. INSTALL WOOD CLADDING AT CAFE AS INDICATED ON INTERIOR FINISH ELEVATIONS.
16. INSTALL WOOD CAP AT RESTROOM VESTIBULE WALL EDGE AS INDICATED.
17. INSTALL QUADEC SCHLUTER TRIM AT BACKBAR TILE CORNER AS INDICATED.
18. INSTALL CUSTOM WOOD CAP AT STOREFRONT WALL EDGE AT CAFE AS INDICATED.
19. INSTALL CUSTOM WOOD TRIM AT MERCH AS INDICATED.
20. INSTALL JOLLY SCHLUTER TRIM ABOVE BACKBAR TILE AND RESTROOM TILE TOP AS INDICATED.
21. INSTALL CORNER GUARD AT OUTSIDE CORNER AS INDICATED.

FOR CONSTRUCTION

© 2019 STARBUCKS COFFEE COMPANY

STARBUCKS®
2401 UTAH AVENUE SOUTH
SEATTLE, WASHINGTON 98134
(206) 318-1575

THESE DRAWINGS AND THE PROJECT MANUAL ARE CONFIDENTIAL AND SHALL REMAIN THE SOLE PROPERTY OF STARBUCKS CORPORATION, WHICH IS THE OWNER OF THE COPYRIGHT IN THIS WORK. THEY SHALL NOT BE REPRODUCED (IN WHOLE OR IN PART), SHARED WITH THIRD PARTIES OR USED IN ANY MANNER ON OTHER PROJECTS OR EXTENSIONS TO THIS PROJECT WITHOUT THE PRIOR WRITTEN CONSENT OF STARBUCKS CORPORATION. THESE DRAWINGS AND SPECIFICATIONS ARE INTENDED TO EXPRESS DESIGN INTENT FOR A PROTOTYPICAL STARBUCKS STORE (WHICH IS SUBJECT TO CHANGE AT ANYTIME) AND DO NOT REFLECT ACTUAL SITE CONDITIONS. NEITHER PARTY SHALL HAVE ANY OBLIGATION NOR LIABILITY TO THE OTHER (EXCEPT STATED ABOVE) UNTIL A WRITTEN AGREEMENT IS FULLY EXECUTED BY BOTH PARTIES.

STARBUCKS TEMPLATE VERSION: i2021-09-13

Design Forum Architects Inc.
2056 Byers Rd
Miamisburg, OH 45342
Tel: (844) 804-7700
Donald J. Rethman
Architect In Charge
License: AR0017303

Design Forum Engineering
2056 Byers Rd
Miamisburg, OH 45342
Tel: (844) 804-7700
Timothy L. Raberding, PE
Professional Engineer
License: 62078

PROJECT NAME:
US 98 & GRIFFIN RD

PROJECT ADDRESS:
3105 US-98 NORTH
LAKELAND, FLORIDA 33801

STORE #:	80004
PROJECT #:	96892-001
ISSUE DATE:	2025-10-10
DESIGNER:	ASHLEY SUEIRAS
PRODUCTION DESIGNER:	ANDY MCLOUD
CHECKED BY:	DONALD RETHMAN

Revision Schedule

Rev	Date	By	Description
2	08/26/25		REV-2

SHEET TITLE:
WALL FINISH PLAN

SCALE: 1/4" = 1'-0"

SHEET NUMBER:
I-107

10/9/2025 9:54:17 AM C:\Users\julia.gray\Documents\96892-001_80004_US 98 & Griffin Rd, FL_2025_Julia.grayFRYY6.rvt

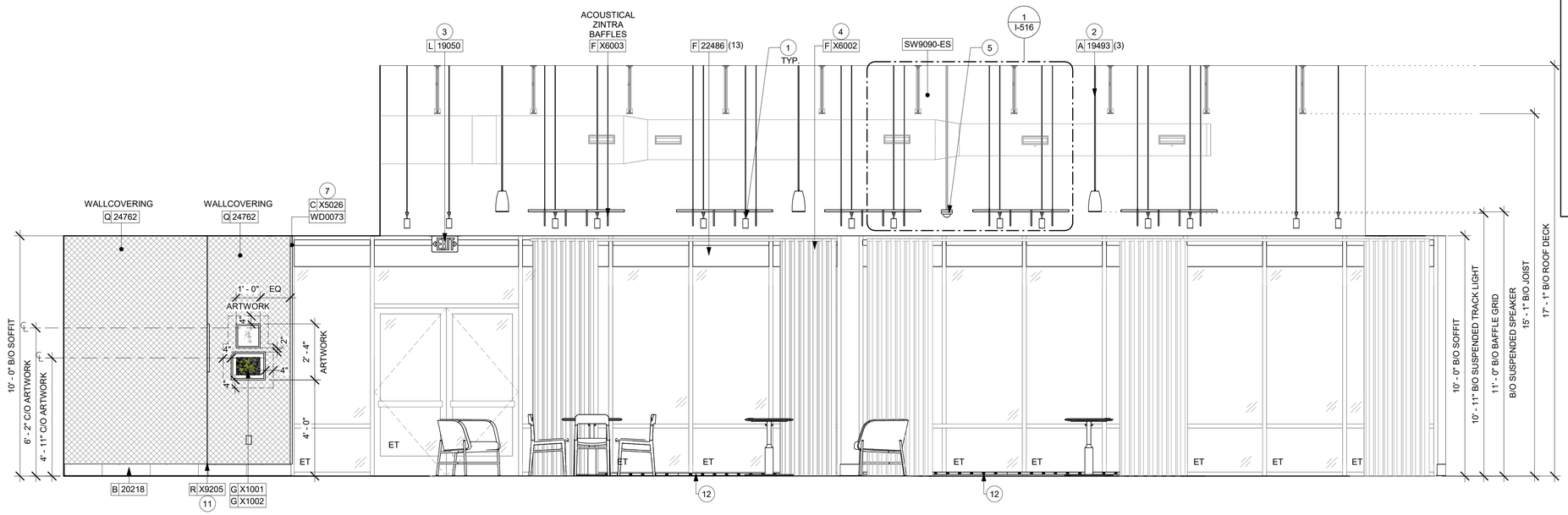

1 STOREFRONT ENTRANCE

Scale: 3/8" = 1'-0"

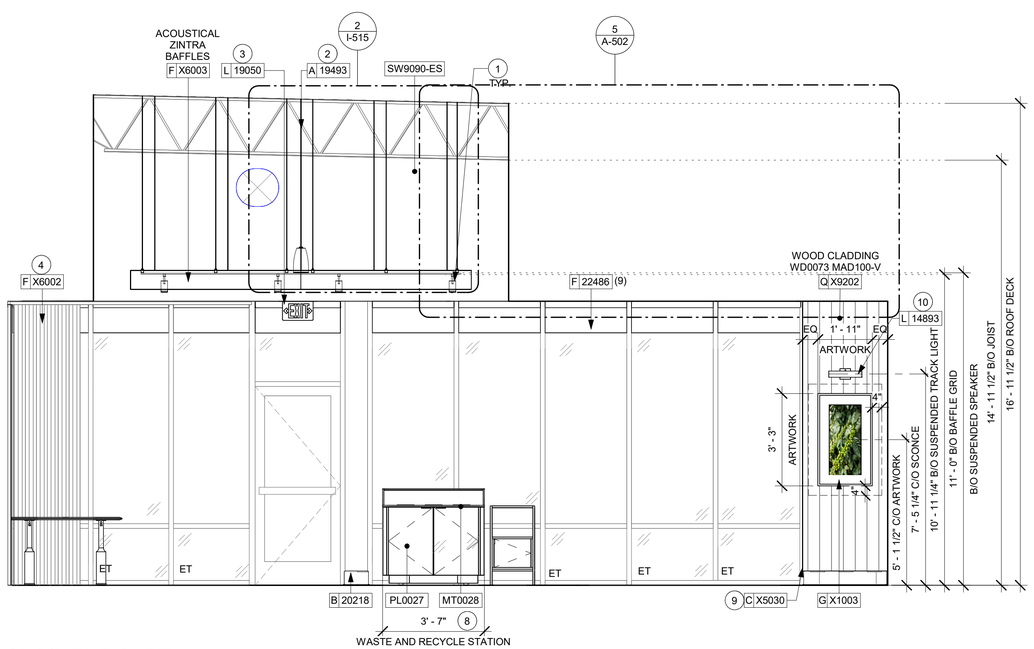

2 CONDIMENT CART

Scale: 3/8" = 1'-0"

0 2' 4' 6'

Scale: 3/8" = 1'-0"

LEGEND

INDICATES WALL BLOCKING. BLOCKING TO BE PROVIDED AS REQUIRED TO SUPPORT WALL ATTACHMENTS. EXTEND BLOCKING 4" (100mm) BEYOND EDGE OF ATTACHMENTS.

WALL TILE START POINT DATUM

GENERAL NOTES

A. FOR PAINT AND WALL TREATMENT SCHEDULES, REFER TO THE INTERIOR FINISH SHEET. FOR GRAPHICS SCHEDULE, REFER TO THE FURNITURE, FIXTURES, AND EQUIPMENT (FF & E) SCHEDULES.

B. REFER TO MANUFACTURER'S INSTRUCTIONS INCLUDED WITH ARTWORK/GRAPHICS FOR PROPER INSTALLATION.

C. PAINT FINISHES SHALL BE APPLIED AS FOLLOWS, UNLESS NOTED OTHERWISE:
   1. WOODS AND METAL SURFACES SHALL BE SEMI-GLOSS OR EQUAL.
   2. ACCENT AND TRIM PAINTS TO BE SEMI-GLOSS OR EQUAL.
      a. WALL AND CEILING PAINTS TO BE EGGSHELL OR EQUAL.
   3. PAINTS IN BOH, RESTROOM(S) OR CAFE BAR SHALL BE SEMI-GLOSS OR EQUAL.

D. FLOORS, WALLS AND CEILING FINISHES IN FOOD PREPARATION AREAS SHALL BE SMOOTH, NON-TOXIC, NON-ABSORBENT, DURABLE AND EASILY CLEANABLE. PAINT SHALL BE WASHABLE; SEMI-GLOSS OR HIGH GLOSS FINISH.

KEYED NOTES

1. INSTALL SUSPENDED TRACK LIGHTING AS INDICATED. SEE LIGHTING PLAN.
2. INSTALL SUSPENDED SPEAKERS AS INDICATED. SEE LIGHTING PLAN.
3. LOCATION OF ALL EXIT/ EMERGENCY LIGHTS FOR REFERENCE ONLY. GC TO VERIFY WITH LOCAL FIRE MARSHAL PRIOR TO INSTALLATION.
4. INSTALL CURTAIN AT CAFE AS INDICATED.
5. INSTALL SUSPENDED SECURITY CAMERA AS INDICATED. TRIM AND SUSPENSION TO BE PAINTED SW 6991 BLACK MAGIC.
6. INSTALL CORNER TRIM DETAIL AT WALLCOVERING AS INDICATED. SEE DETAILS: 10/I-502.
7. INSTALL CUSTOM WOOD TRIM AT STOREFRONT WALL EDGE AT CAFE AS INDICATED.
8. INSTALL WASTE AND RECYCLE STATION AS INDICATED.
9. INSTALL FRY REGLET "Y" TRIM AT WOOD CLADDING CORNER AS INDICATED.
10. INSTALL WALL SCONCE AT CAFE AS INDICATED.
11. INSTALL CORNER TRIM DETAIL AT WALLCOVERING AS INDICATED. SEE DETAILS: 10/I-502.
12. LOCATION OF POWER STRIP ALONG BASE OF STORE FRONT - BLACK FINISH WITH BLACK PLUGS

FOR CONSTRUCTION

© 2019 STARBUCKS COFFEE COMPANY

STARBUCKS®
2401 UTAH AVENUE SOUTH
SEATTLE, WASHINGTON 98134
(206) 318-1575

THESE DRAWINGS AND THE PROJECT MANUAL ARE CONFIDENTIAL AND SHALL REMAIN THE SOLE PROPERTY OF STARBUCKS CORPORATION, WHICH IS THE OWNER OF THE COPYRIGHT IN THIS WORK. THEY SHALL NOT BE REPRODUCED (IN WHOLE OR IN PART), SHARED WITH THIRD PARTIES OR USED IN ANY MANNER ON OTHER PROJECTS OR EXTENSIONS TO THIS PROJECT WITHOUT THE PRIOR WRITTEN CONSENT OF STARBUCKS CORPORATION. THESE DRAWINGS AND SPECIFICATIONS ARE INTENDED TO EXPRESS DESIGN INTENT FOR A PROTOTYPICAL STARBUCKS STORE (WHICH IS SUBJECT TO CHANGE AT ANYTIME) AND DO NOT REFLECT ACTUAL SITE CONDITIONS. NEITHER PARTY SHALL HAVE ANY OBLIGATION NOR LIABILITY TO THE OTHER (EXCEPT STATED ABOVE) UNTIL A WRITTEN AGREEMENT IS FULLY EXECUTED BY BOTH PARTIES.

STARBUCKS TEMPLATE VERSION: i2021-09-13

Design Forum Architects Inc.
2056 Byers Rd
Miamisburg, OH 45342
Tel: (844) 804-7700
Donald J. Rethman
Architect In Charge
License: AR0017303

Design Forum Engineering
2056 Byers Rd
Miamisburg, OH 45342
Tel: (844) 804-7700
Timothy L. Raberding, PE
Professional Engineer
License: 62078

PROJECT NAME:
US 98 & GRIFFIN RD

PROJECT ADDRESS:
3105 US-98 NORTH
LAKELAND, FLORIDA 33801

STORE #:	80004
PROJECT #:	96892-001
ISSUE DATE:	2025-10-10
DESIGNER:	ASHLEY SUEIRAS
PRODUCTION DESIGNER:	ANDY MCLOUD
CHECKED BY:	DONALD RETHMAN

Revision Schedule

Rev	Date	By	Description
2	08/26/25		REV-2

SHEET TITLE:
INTERIOR FINISH ELEVATIONS
SCALE: 3/8" = 1'-0"

SHEET NUMBER:
I-201

10/9/2025 9:54:19 AM C:\Users\julia.gray\Documents\96892-001_80004_US 98 & Griffin Rd, FL_2025_Julia.gray\FRYY6.rvt

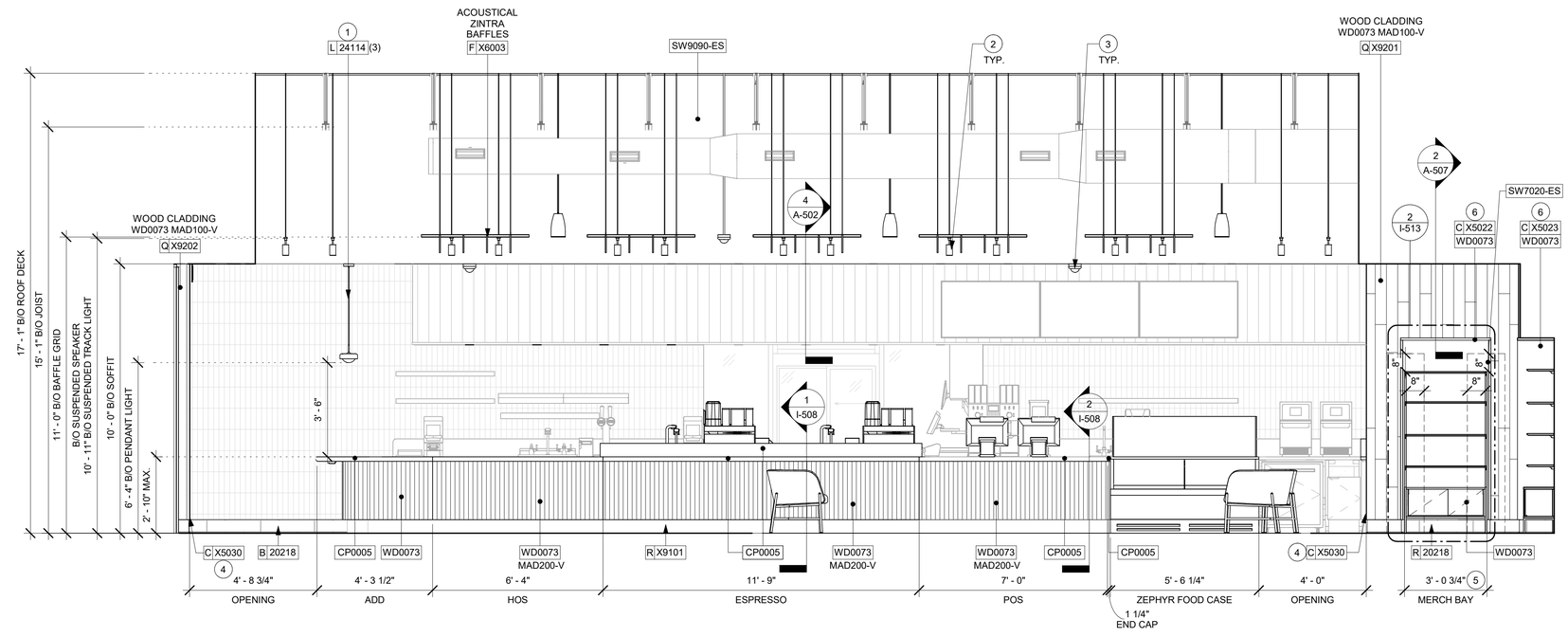

1 FRONT BAR (CUSTOMER SIDE)
Scale: 3/8" = 1'-0"

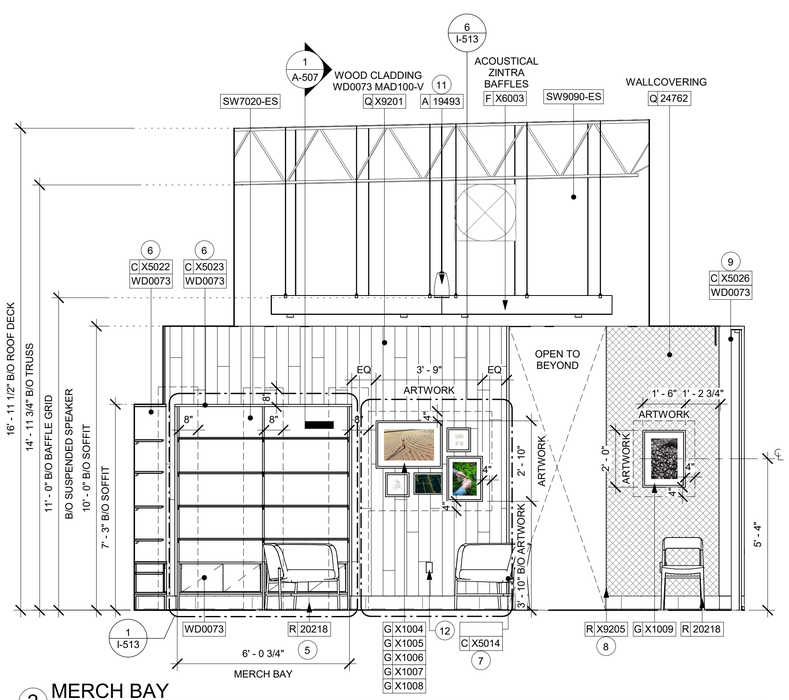

2 MERCH BAY
Scale: 3/8" = 1'-0"

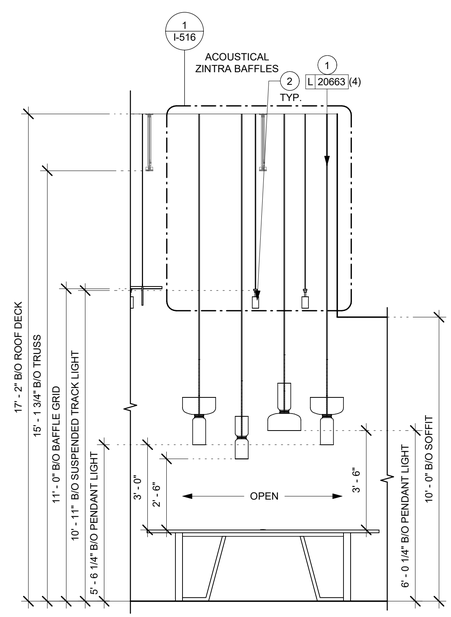

3 COMMUNITY TABLE
Scale: 3/8" = 1'-0"

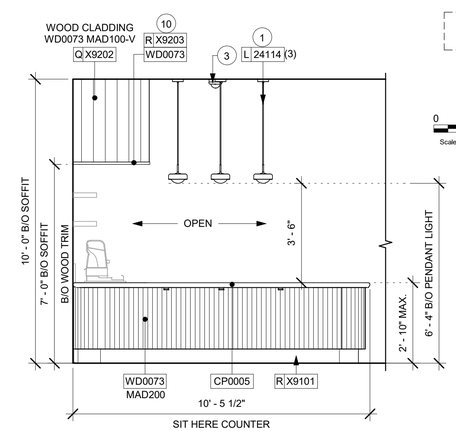

4 CAFE - SIT HERE COUNTER
Scale: 3/8" = 1'-0"

GENERAL NOTES

A. FOR PAINT AND WALL TREATMENT SCHEDULES, REFER TO THE INTERIOR FINISH SHEET. FOR GRAPHICS SCHEDULE, REFER TO THE FURNITURE, FIXTURES, AND EQUIPMENT (FF & E) SCHEDULES.

B. REFER TO MANUFACTURER'S INSTRUCTIONS INCLUDED WITH ARTWORK/GRAPHICS FOR PROPER INSTALLATION.

C. PAINT FINISHES SHALL BE APPLIED AS FOLLOWS, UNLESS NOTED OTHERWISE:
1. WOODS AND METAL SURFACES SHALL BE SEMI-GLOSS OR EQUAL.
2. ACCENT AND TRIM PAINTS TO BE SEMI-GLOSS OR EQUAL.
   a. WALL AND CEILING PAINTS TO BE EGGSHELL OR EQUAL.
3. PAINTS IN BOH, RESTROOM(S) OR CAFE BAR SHALL BE SEMI-GLOSS OR EQUAL.

D. FLOORS, WALLS AND CEILING FINISHES IN FOOD PREPARATION AREAS SHALL BE SMOOTH, NON-TOXIC, NON-ABSORBENT, DURABLE AND EASILY CLEANABLE. PAINT SHALL BE WASHABLE; SEMI-GLOSS OR HIGH GLOSS FINISH.

KEYED NOTES

1. INSTALL PENDANT LIGHTS AS INDICATED.
2. INSTALL SUSPENDED TRACK LIGHTING AS INDICATED. SEE LIGHTING PLAN.
3. INSTALL CEILING MOUNTED SECURITY CAMERA AS INDICATED.
4. INSTALL FRY REGLET "Y" TRIM AT WOOD CLADDING CORNER AS INDICATED.
5. INSTALL MERCH BAY AS INDICATED.
6. INSTALL WOOD TRIM AROUD MERCH BAY AS INDICATED.
7. INSTALL WOOD TRIM AT RESTROOM VESTIBULE WALL EDGE AS INDICATED.
8. INSTALL CORNER TRIM DETAIL AT WALLCOVERING AS INDICATED. SEE DETAILS: 10/I-502.
9. INSTALL CUSTOM WOOD TRIM AT STOREFRONT WALL EDGE AT CAFE AS INDICATED.
10. INSTALL WOOD TRIM AT BACKBAR SOFFIT AS INDICATED.
11. INSTALL SUSPENDED SPEAKERS AS INDICATED. SEE LIGHTING PLAN.
12. GC TO PROVIDE COVER PLATES WHITE THROUGHOUT CAFE. REFER TO PENETRATION PLAN FOR FINISH.

LEGEND

INDICATES WALL BLOCKING. BLOCKING TO BE PROVIDED AS REQUIRED TO SUPPORT WALL ATTACHMENTS. EXTEND BLOCKING 4" (100mm) BEYOND EDGE OF ATTACHMENTS.

WALL TILE START POINT DATUM

0 2' 4' 6'
Scale: 3/8" = 1'-0"

FOR CONSTRUCTION

© 2019 STARBUCKS COFFEE COMPANY

STARBUCKS®
2401 UTAH AVENUE SOUTH
SEATTLE, WASHINGTON 98134
(206) 318-1575

THESE DRAWINGS AND THE PROJECT MANUAL ARE CONFIDENTIAL AND SHALL REMAIN THE SOLE PROPERTY OF STARBUCKS CORPORATION, WHICH IS THE OWNER OF THE COPYRIGHT IN THIS WORK. THEY SHALL NOT BE REPRODUCED (IN WHOLE OR IN PART), SHARED WITH THIRD PARTIES OR USED IN ANY MANNER ON OTHER PROJECTS OR EXTENSIONS TO THIS PROJECT WITHOUT THE PRIOR WRITTEN CONSENT OF STARBUCKS CORPORATION. THESE DRAWINGS AND SPECIFICATIONS ARE INTENDED TO EXPRESS DESIGN INTENT FOR A PROTOTYPICAL STARBUCKS STORE (WHICH IS SUBJECT TO CHANGE AT ANYTIME) AND DO NOT REFLECT ACTUAL SITE CONDITIONS. NEITHER PARTY SHALL HAVE ANY OBLIGATION NOR LIABILITY TO THE OTHER (EXCEPT STATED ABOVE) UNTIL A WRITTEN AGREEMENT IS FULLY EXECUTED BY BOTH PARTIES.

STARBUCKS TEMPLATE VERSION: i2021-09-13

Design Forum Architects Inc.
2056 Byers Rd
Miamisburg, OH 45342
Tel: (844) 804-7700
Donald J. Rethman
Architect In Charge
License: AR0017303

Design Forum Engineering
2056 Byers Rd
Miamisburg, OH 45342
Tel: (844) 804-7700
Timothy L. Raberding, PE
Professional Engineer
License: 62078

PROJECT NAME:
US 98 & GRIFFIN RD

PROJECT ADDRESS:
3105 US-98 NORTH
LAKELAND, FLORIDA 33801

STORE #:	80004
PROJECT #:	96892-001
ISSUE DATE:	2025-10-10
DESIGNER:	ASHLEY SUEIRAS
PRODUCTION DESIGNER:	ANDY MCLOUD
CHECKED BY:	DONALD RETHMAN

Revision Schedule

Rev	Date	By	Description
2	08/26/25		REV-2

SHEET TITLE:
INTERIOR FINISH ELEVATIONS
SCALE: 3/8" = 1'-0"

SHEET NUMBER:
I-202

10/9/2025 9:54:23 AM C:\Users\julia.gray\Documents\96892-001_80004_US 98 & Griffin Rd, FL_2025_Julia.gray\FRYY6.rvt

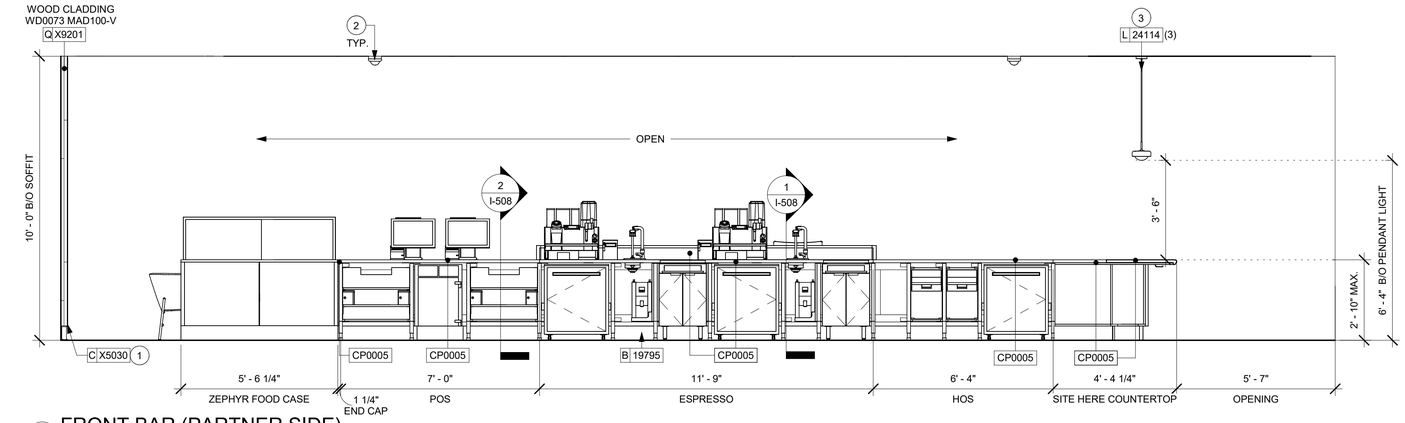

1 FRONT BAR (PARTNER SIDE)
Scale: 3/8" = 1'-0"

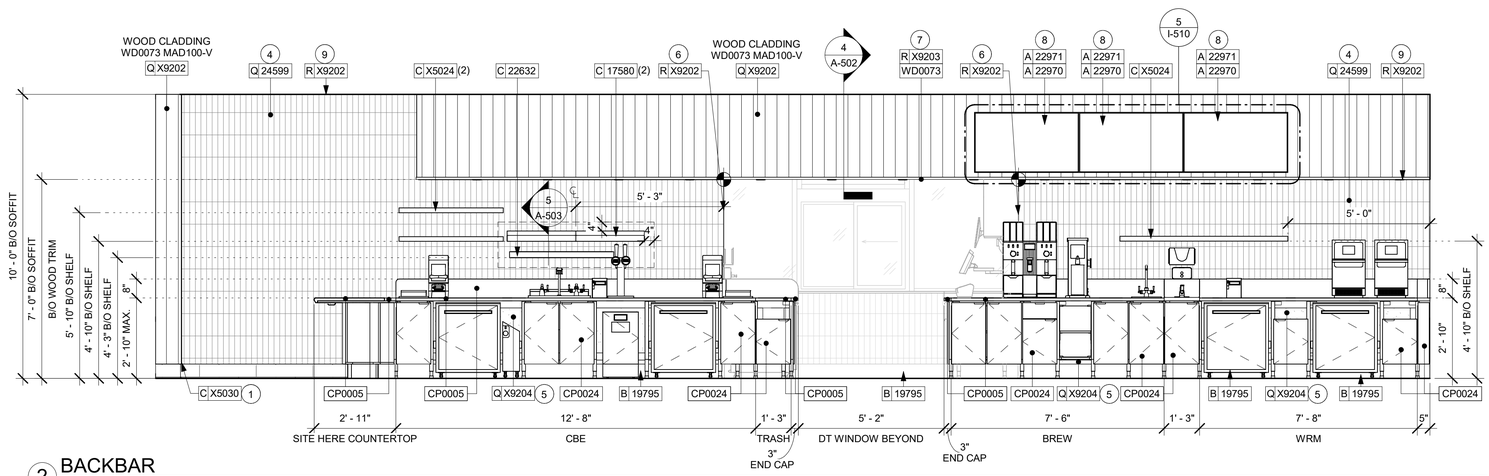

2 BACKBAR
Scale: 3/8" = 1'-0"

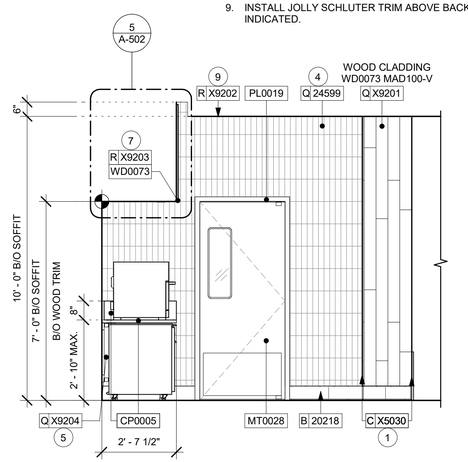

3 BACKBAR - NORTHWEST
Scale: 3/8" = 1'-0"

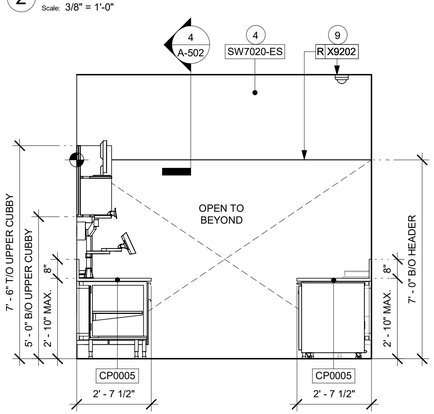

4 DT HEADER
Scale: 3/8" = 1'-0"

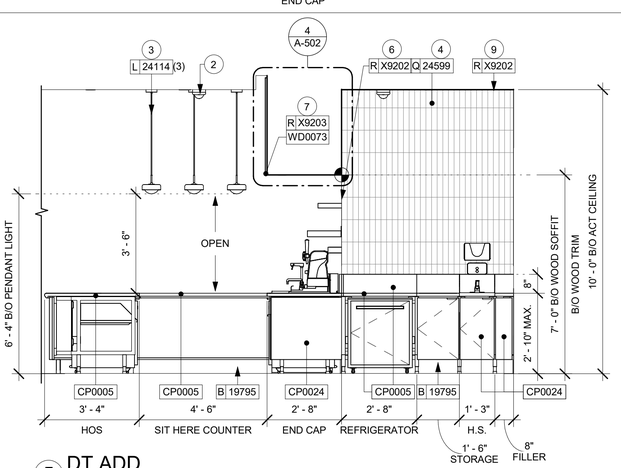

5 DT ADD
Scale: 3/8" = 1'-0"

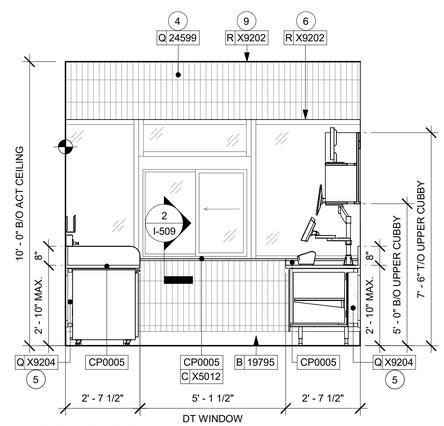

6 DT WINDOW
Scale: 3/8" = 1'-0"

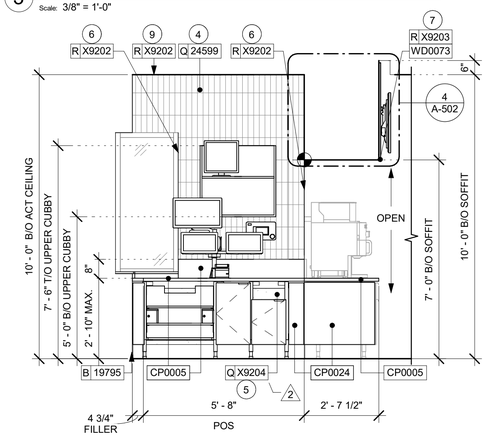

7 DT POS
Scale: 3/8" = 1'-0"

GENERAL NOTES

A. FOR PAINT AND WALL TREATMENT SCHEDULES, REFER TO THE INTERIOR FINISH SHEET. FOR GRAPHICS SCHEDULE, REFER TO THE FURNITURE, FIXTURES, AND EQUIPMENT (FF & E) SCHEDULES.

B. REFER TO MANUFACTURER'S INSTRUCTIONS INCLUDED WITH ARTWORK/GRAPHICS FOR PROPER INSTALLATION.

C. PAINT FINISHES SHALL BE APPLIED AS FOLLOWS, UNLESS NOTED OTHERWISE:
1. WOODS AND METAL SURFACES SHALL BE SEMI-GLOSS OR EQUAL.
2. ACCENT AND TRIM PAINTS TO BE SEMI-GLOSS OR EQUAL.
   a. WALL AND CEILING PAINTS TO BE EGGSHELL OR EQUAL.
3. PAINTS IN BOH, RESTROOM(S) OR CAFE BAR SHALL BE SEMI-GLOSS OR EQUAL.

D. FLOORS, WALLS AND CEILING FINISHES IN FOOD PREPARATION AREAS SHALL BE SMOOTH, NON-TOXIC, NON-ABSORBENT, DURABLE AND EASILY CLEANABLE. PAINT SHALL BE WASHABLE; SEMI-GLOSS OR HIGH GLOSS FINISH.

LEGEND

INDICATES WALL BLOCKING. BLOCKING TO BE PROVIDED AS REQUIRED TO SUPPORT WALL ATTACHMENTS. EXTEND BLOCKING 4" (100mm) BEYOND EDGE OF ATTACHMENTS.

WALL TILE START POINT DATUM

0 2' 4' 6'
Scale: 3/8" = 1'-0"

KEYED NOTES

1. INSTALL FRY REGLET "Y" TRIM AT WOOD CLADDING CORNER AS INDICATED.
2. INSTALL CEILING MOUNTED SECURITY CAMERA AS INDICATED.
3. INSTALL PENDANT LIGHTS AS INDICATED.
4. GC TO INSTALL BACKBAR WALL TILE AS INDICATED. SEE DETAIL ON SHEET 7/I-502.
5. BLACK FRP BENEATH BACKBAR AT EXPOSED WALLS. EXTEND FROM TOP OF WALL BASE TO UNDERSIDE OF COUNTERTOP.
6. INSTALL JOLLY SCHLUTER TRIM AT BACKBAR TILE CORNER AS INDICATED.
7. INSTALL WOOD TRIM AT BACKBAR SOFFIT AS INDICATED.
8. ATTACH DIGITAL MENU BOARDS PER INSTALLATION DETAIL.
9. INSTALL JOLLY SCHLUTER TRIM ABOVE BACKBAR TILE AS INDICATED.

FOR CONSTRUCTION

© 2019 STARBUCKS COFFEE COMPANY

STARBUCKS®
2401 UTAH AVENUE SOUTH
SEATTLE, WASHINGTON 98134
(206) 318-1575

THESE DRAWINGS AND THE PROJECT MANUAL ARE CONFIDENTIAL AND SHALL REMAIN THE SOLE PROPERTY OF STARBUCKS CORPORATION, WHICH IS THE OWNER OF THE COPYRIGHT IN THIS WORK. THEY SHALL NOT BE REPRODUCED (IN WHOLE OR IN PART), SHARED WITH THIRD PARTIES OR USED IN ANY MANNER ON OTHER PROJECTS OR EXTENSIONS TO THIS PROJECT WITHOUT THE PRIOR WRITTEN CONSENT OF STARBUCKS CORPORATION. THESE DRAWINGS AND SPECIFICATIONS ARE INTENDED TO EXPRESS DESIGN INTENT FOR A PROTOTYPICAL STARBUCKS STORE (WHICH IS SUBJECT TO CHANGE AT ANYTIME) AND DO NOT REFLECT ACTUAL SITE CONDITIONS. NEITHER PARTY SHALL HAVE ANY OBLIGATION NOR LIABILITY TO THE OTHER (EXCEPT STATED ABOVE) UNTIL A WRITTEN AGREEMENT IS FULLY EXECUTED BY BOTH PARTIES.

STARBUCKS TEMPLATE VERSION: i2021-09-13

Design Forum Architects Inc.
2056 Byers Rd
Miamisburg, OH 45342
Tel: (844) 804-7700
Donald J. Rethman
Architect In Charge
License: AR0017303

Design Forum Engineering
2056 Byers Rd
Miamisburg, OH 45342
Tel: (844) 804-7700
Timothy L. Raberding, PE
Professional Engineer
License: 62078

PROJECT NAME:
US 98 & GRIFFIN RD

PROJECT ADDRESS:
3105 US-98 NORTH
LAKELAND, FLORIDA 33801

STORE #:	80004
PROJECT #:	96892-001
ISSUE DATE:	2025-10-10
DESIGNER:	ASHLEY SUEIRAS
PRODUCTION DESIGNER:	ANDY MCLOUD
CHECKED BY:	DONALD RETHMAN

Revision Schedule

Rev	Date	By	Description
2	08/26/25		REV-2

SHEET TITLE:
INTERIOR FINISH ELEVATIONS
SCALE: 3/8" = 1'-0"

SHEET NUMBER:
I-203

10/9/2025 9:54:27 AM C:\Users\julia.gray\Documents\96892-001_80004_US 98 & Griffin Rd, FL_2025_Julia.gray\FRYY6.rvt

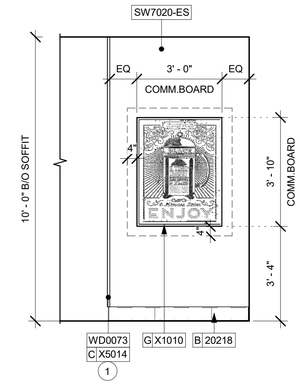

1 RR VEST - SOUTHEAST
Scale: 3/8" = 1'-0"

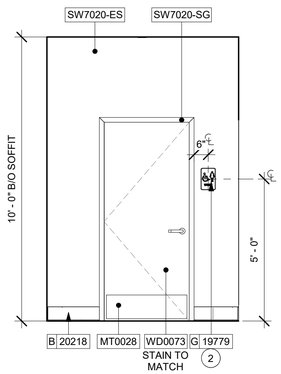

2 RR VEST - SOUTHWEST
Scale: 3/8" = 1'-0"

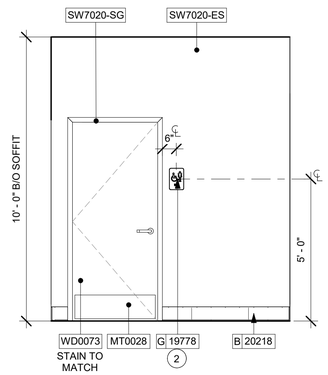

3 RR VEST - NORTHWEST
Scale: 3/8" = 1'-0"

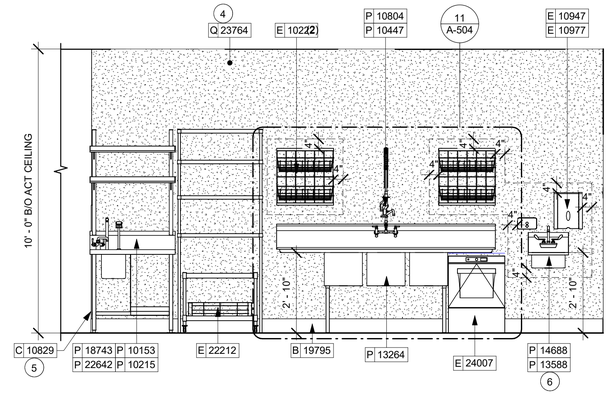

4 HAND SINK
Scale: 3/8" = 1'-0"

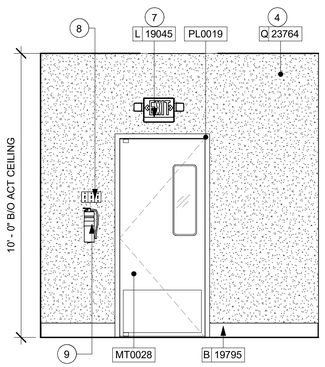

5 WORKROOM ENTRANCE
Scale: 3/8" = 1'-0"

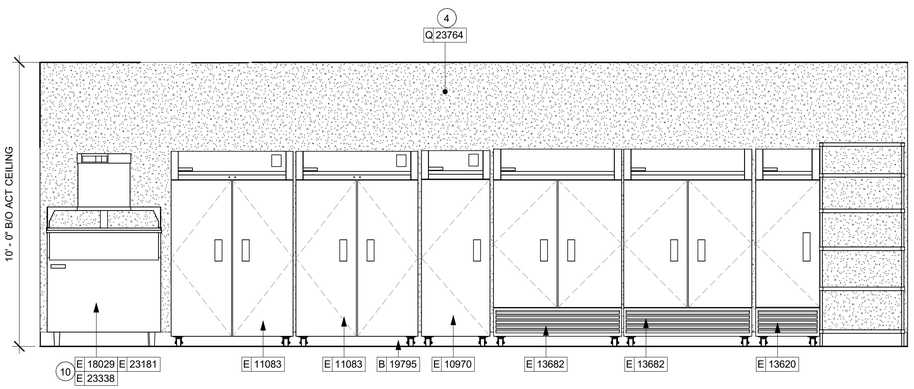

6 ICE - MACHINE
Scale: 3/8" = 1'-0"

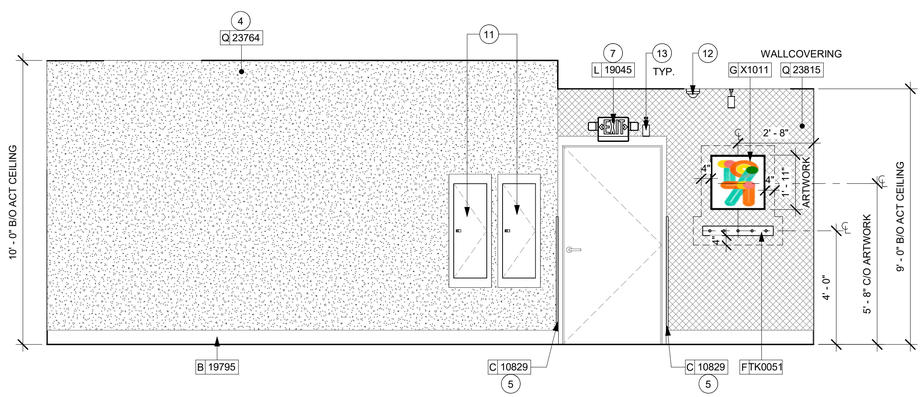

7 ELECTRICAL PANEL
Scale: 3/8" = 1'-0"

GENERAL NOTES

A. FOR PAINT AND WALL TREATMENT SCHEDULES, REFER TO THE INTERIOR FINISH SHEET. FOR GRAPHICS SCHEDULE, REFER TO THE FURNITURE, FIXTURES, AND EQUIPMENT (FF & E) SCHEDULES.

B. REFER TO MANUFACTURER'S INSTRUCTIONS INCLUDED WITH ARTWORK/GRAPHICS FOR PROPER INSTALLATION.

C. PAINT FINISHES SHALL BE APPLIED AS FOLLOWS, UNLESS NOTED OTHERWISE:
1. WOODS AND METAL SURFACES SHALL BE SEMI-GLOSS OR EQUAL.
2. ACCENT AND TRIM PAINTS TO BE SEMI-GLOSS OR EQUAL.
   a. WALL AND CEILING PAINTS TO BE EGGSHELL OR EQUAL.
3. PAINTS IN BOH, RESTROOM(S) OR CAFE BAR SHALL BE SEMI-GLOSS OR EQUAL.

D. FLOORS, WALLS AND CEILING FINISHES IN FOOD PREPARATION AREAS SHALL BE SMOOTH, NON-TOXIC, NON-ABSORBENT, DURABLE AND EASILY CLEANABLE. PAINT SHALL BE WASHABLE; SEMI-GLOSS OR HIGH GLOSS FINISH.

KEYED NOTES

1. INSTALL WOOD TRIM AT RESTROOM VESTIBULE WALL EDGE AS INDICATED.
2. INSTALL RESTROOM SIGNAGE AS INDICATED.
3. NOT USED. 2
4. INSTALL FULL HEIGHT POLYWALL WALLCOVERING AT WORKROOM WALLS AS INDICATED.
5. INSTALL CORNER GUARD AT OUTSIDE CORNER AS INDICATED. SEE DETAILS: 10/I-502.
6. WALL MOUNT HAND SINK WITH SOAP AND PAPER TOWEL DISPENSER. GC TO PROVIDE BLOCKING FOR FASTENERS.
7. LOCATION OF ALL EXIT/ EMERGENCY LIGHTS FOR REFERENCE ONLY. GC TO VERIFY WITH LOCAL FIRE MARSHAL PRIOR TO INSTALLATION.
8. LOCATION OF ALL SWITCHING.
9. PLACE FIRE EXTINGUISHER IN WORKROOM AS PER FIRE INSPECTOR.
10. ICE MACHINE (SEE PLUMBING AND ELECTRICAL DRAWINGS FOR ADDITIONAL INFORMATION).
11. RECESSED ELECTRICAL PANELS (SEE ELECTRICAL DRAWINGS FOR ADDITIONAL INFORMATION).
12. INSTALL CEILING MOUNTED SECURITY CAMERA AS INDICATED.
13. INSTALL SURFACE MOUNTED TRACK LIGHTING AS INDICATED. SEE LIGHTING PLAN.

LEGEND

INDICATES WALL BLOCKING. BLOCKING TO BE PROVIDED AS REQUIRED TO SUPPORT WALL ATTACHMENTS. EXTEND BLOCKING 4" (100mm) BEYOND EDGE OF ATTACHMENTS.

WALL TILE START POINT DATUM

0 2' 4' 6'
Scale: 3/8" = 1'-0"

FOR CONSTRUCTION

© 2019 STARBUCKS COFFEE COMPANY

STARBUCKS®
2401 UTAH AVENUE SOUTH
SEATTLE, WASHINGTON 98134
(206) 318-1575

THESE DRAWINGS AND THE PROJECT MANUAL ARE CONFIDENTIAL AND SHALL REMAIN THE SOLE PROPERTY OF STARBUCKS CORPORATION, WHICH IS THE OWNER OF THE COPYRIGHT IN THIS WORK. THEY SHALL NOT BE REPRODUCED (IN WHOLE OR IN PART), SHARED WITH THIRD PARTIES OR USED IN ANY MANNER ON OTHER PROJECTS OR EXTENSIONS TO THIS PROJECT WITHOUT THE PRIOR WRITTEN CONSENT OF STARBUCKS CORPORATION. THESE DRAWINGS AND SPECIFICATIONS ARE INTENDED TO EXPRESS DESIGN INTENT FOR A PROTOTYPICAL STARBUCKS STORE (WHICH IS SUBJECT TO CHANGE AT ANYTIME) AND DO NOT REFLECT ACTUAL SITE CONDITIONS. NEITHER PARTY SHALL HAVE ANY OBLIGATION NOR LIABILITY TO THE OTHER (EXCEPT STATED ABOVE) UNTIL A WRITTEN AGREEMENT IS FULLY EXECUTED BY BOTH PARTIES.

STARBUCKS TEMPLATE VERSION: i2021-09-13

Design Forum Architects Inc.
2056 Byers Rd
Miamisburg, OH 45342
Tel: (844) 804-7700
Donald J. Rethman
Architect In Charge
License: AR0017303

Design Forum Engineering
2056 Byers Rd
Miamisburg, OH 45342
Tel: (844) 804-7700
Timothy L. Raberding, PE
Professional Engineer
License: 62078

PROJECT NAME:
US 98 & GRIFFIN RD

PROJECT ADDRESS:
3105 US-98 NORTH
LAKELAND, FLORIDA 33801

STORE #:	80004
PROJECT #:	96892-001
ISSUE DATE:	2025-10-10
DESIGNER:	ASHLEY SUEIRAS
PRODUCTION DESIGNER:	ANDY MCLOUD
CHECKED BY:	DONALD RETHMAN

Revision Schedule

Rev	Date	By	Description
2	08/26/25		REV-2

SHEET TITLE:
INTERIOR FINISH ELEVATIONS
SCALE: 3/8" = 1'-0"

SHEET NUMBER:
I-204

10/9/2025 9:54:30 AM C:\Users\julia.gray\Documents\96892-001_80004_US 98 & Griffin Rd, FL_2025_Julia.gray\FRYY6.rvt

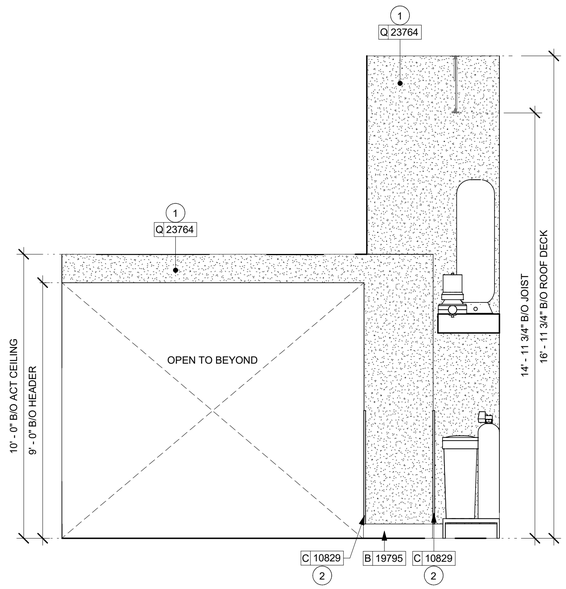

1 WORKROOM - NORTHEAST
Scale: 3/8" = 1'-0"

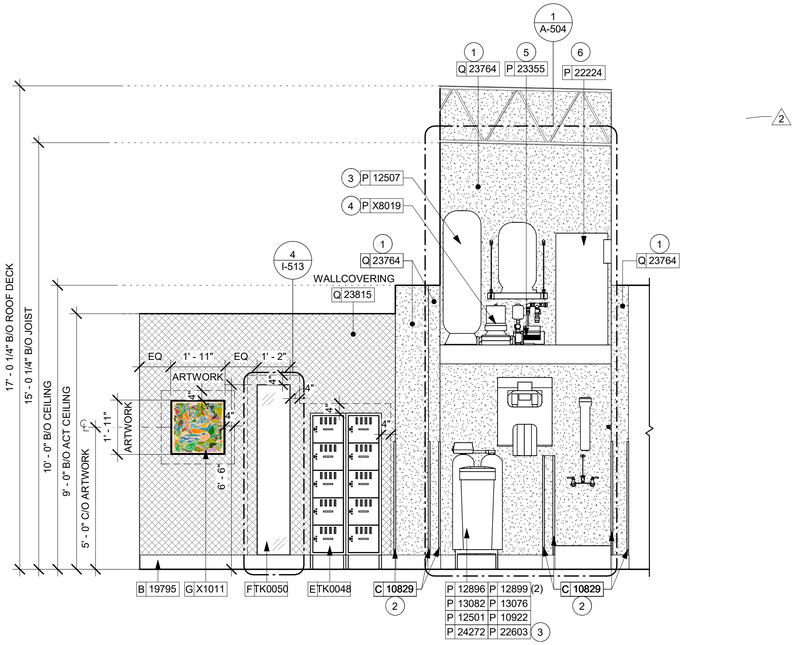

2 WATER FILTRATION SYSTEM
Scale: 3/8" = 1'-0"

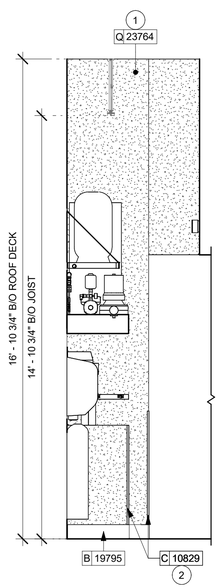

3 WORKROOM - SOUTHWEST
Scale: 3/8" = 1'-0"

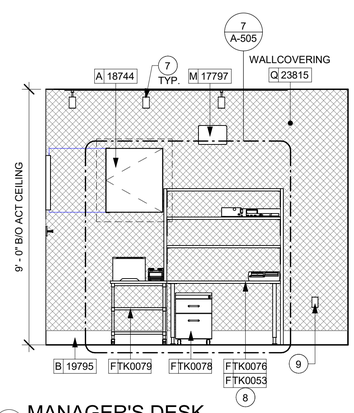

4 MANAGER'S DESK
Scale: 3/8" = 1'-0"

GENERAL NOTES

A. FOR PAINT AND WALL TREATMENT SCHEDULES, REFER TO THE INTERIOR FINISH SHEET. FOR GRAPHICS SCHEDULE, REFER TO THE FURNITURE, FIXTURES, AND EQUIPMENT (FF & E) SCHEDULES.

B. REFER TO MANUFACTURER'S INSTRUCTIONS INCLUDED WITH ARTWORK/GRAPHICS FOR PROPER INSTALLATION.

C. PAINT FINISHES SHALL BE APPLIED AS FOLLOWS, UNLESS NOTED OTHERWISE:
1. WOODS AND METAL SURFACES SHALL BE SEMI-GLOSS OR EQUAL.
2. ACCENT AND TRIM PAINTS TO BE SEMI-GLOSS OR EQUAL.
   a. WALL AND CEILING PAINTS TO BE EGGSHELL OR EQUAL.
3. PAINTS IN BOH, RESTROOM(S) OR CAFE BAR SHALL BE SEMI-GLOSS OR EQUAL.

D. FLOORS, WALLS AND CEILING FINISHES IN FOOD PREPARATION AREAS SHALL BE SMOOTH, NON-TOXIC, NON-ABSORBENT, DURABLE AND EASILY CLEANABLE. PAINT SHALL BE WASHABLE; SEMI-GLOSS OR HIGH GLOSS FINISH.

KEYED NOTES

1. INSTALL FULL HEIGHT NRP WALLCOVERING AT WORKROOM WALLS AS INDICATED.
2. INSTALL CORNER GUARD AT OUTSIDE CORNER AS INDICATED. SEE DETAILS: 10/I-502.
3. WATER FILTRATION EQUIPMENT (SEE PLUMBING DRAWINGS).
4. INSTALL WATER RE-CIRCULATION PUMP AS INDICATED.
5. INSTALL BOOSTER PUMP AS INDICATED.
6. WATER HEATER (SEE PLUMBING DRAWINGS).
7. INSTALL SURFACE MOUNTED TRACK LIGHTING AS INDICATED. SEE LIGHTING PLAN.
8. MANAGER'S DESK (SEE ENLARGED DETAILS).
9. GC TO PROVIDE COVER PLATES BLACK THROUGHOUT. REFER TO PENETRATION PLAN FOR FINISH.

LEGEND

INDICATES WALL BLOCKING. BLOCKING TO BE PROVIDED AS REQUIRED TO SUPPORT WALL ATTACHMENTS. EXTEND BLOCKING 4" (100mm) BEYOND EDGE OF ATTACHMENTS.

WALL TILE START POINT DATUM

0 2' 4' 6'
Scale: 3/8" = 1'-0"

FOR CONSTRUCTION

© 2019 STARBUCKS COFFEE COMPANY

STARBUCKS®
2401 UTAH AVENUE SOUTH
SEATTLE, WASHINGTON 98134
(206) 318-1575

THESE DRAWINGS AND THE PROJECT MANUAL ARE CONFIDENTIAL AND SHALL REMAIN THE SOLE PROPERTY OF STARBUCKS CORPORATION, WHICH IS THE OWNER OF THE COPYRIGHT IN THIS WORK. THEY SHALL NOT BE REPRODUCED (IN WHOLE OR IN PART), SHARED WITH THIRD PARTIES OR USED IN ANY MANNER ON OTHER PROJECTS OR EXTENSIONS TO THIS PROJECT WITHOUT THE PRIOR WRITTEN CONSENT OF STARBUCKS CORPORATION. THESE DRAWINGS AND SPECIFICATIONS ARE INTENDED TO EXPRESS DESIGN INTENT FOR A PROTOTYPICAL STARBUCKS STORE (WHICH IS SUBJECT TO CHANGE AT ANYTIME) AND DO NOT REFLECT ACTUAL SITE CONDITIONS. NEITHER PARTY SHALL HAVE ANY OBLIGATION NOR LIABILITY TO THE OTHER (EXCEPT STATED ABOVE) UNTIL A WRITTEN AGREEMENT IS FULLY EXECUTED BY BOTH PARTIES.

STARBUCKS TEMPLATE VERSION: i2021-09-13

Design Forum Architects Inc.
2056 Byers Rd
Miamisburg, OH 45342
Tel: (844) 804-7700
Donald J. Rethman
Architect In Charge
License: AR0017303

Design Forum Engineering
2056 Byers Rd
Miamisburg, OH 45342
Tel: (844) 804-7700
Timothy L. Raberding, PE
Professional Engineer
License: 62078

PROJECT NAME:
US 98 & GRIFFIN RD

PROJECT ADDRESS:
3105 US-98 NORTH
LAKELAND, FLORIDA 33801

STORE #:	80004
PROJECT #:	96892-001
ISSUE DATE:	2025-10-10
DESIGNER:	ASHLEY SUEIRAS
PRODUCTION DESIGNER:	ANDY MCLOUD
CHECKED BY:	DONALD RETHMAN

Revision Schedule

Rev	Date	By	Description
2	08/26/25		REV-2

SHEET TITLE:
INTERIOR FINISH ELEVATIONS
SCALE: 3/8" = 1'-0"

SHEET NUMBER:
I-205

10/9/2025 9:54:32 AM C:\Users\julia.gray\Documents\96892-001_80004_US 98 & Griffin Rd, FL_2025_Julia.grayFRYY6.rvt

1 VIEW TOWARDS FRONT BAR

NOTE: 3D VIEWS ARE FOR REFERENCE ONLY. REFER TO DETAIL SHEETS FOR CONSTRUCTION.

2 VIEW TOWARDS ENGINE AREA

NOTE: 3D VIEWS ARE FOR REFERENCE ONLY. REFER TO DETAIL SHEETS FOR CONSTRUCTION.

3 VIEW TOWARDS CAFE SEATING

NOTE: 3D VIEWS ARE FOR REFERENCE ONLY. REFER TO DETAIL SHEETS FOR CONSTRUCTION.

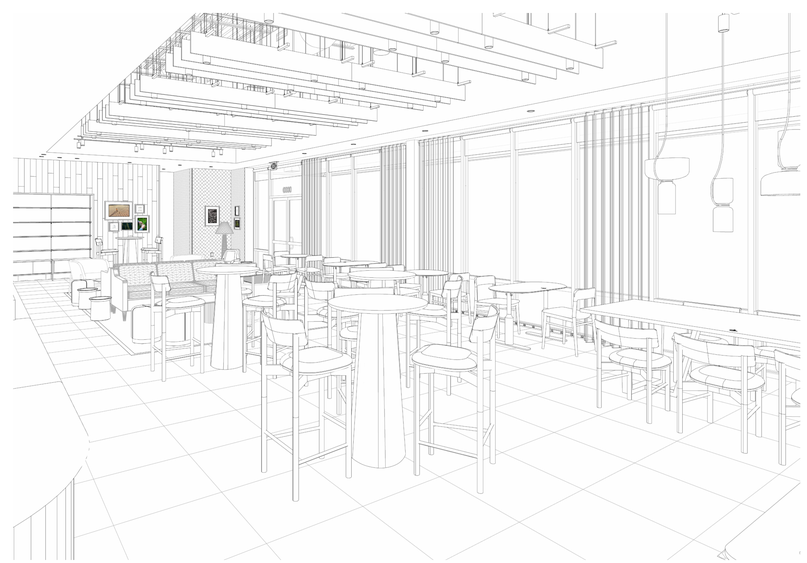

4 VIEW TOWARDS STOREFRONT

NOTE: 3D VIEWS ARE FOR REFERENCE ONLY. REFER TO DETAIL SHEETS FOR CONSTRUCTION.

FOR CONSTRUCTION

© 2019 STARBUCKS COFFEE COMPANY

STARBUCKS®
2401 UTAH AVENUE SOUTH
SEATTLE, WASHINGTON 98134
(206) 318-1575

THESE DRAWINGS AND THE PROJECT MANUAL ARE CONFIDENTIAL AND SHALL REMAIN THE SOLE PROPERTY OF STARBUCKS CORPORATION, WHICH IS THE OWNER OF THE COPYRIGHT IN THIS WORK. THEY SHALL NOT BE REPRODUCED (IN WHOLE OR IN PART), SHARED WITH THIRD PARTIES OR USED IN ANY MANNER ON OTHER PROJECTS OR EXTENSIONS TO THIS PROJECT WITHOUT THE PRIOR WRITTEN CONSENT OF STARBUCKS CORPORATION. THESE DRAWINGS AND SPECIFICATIONS ARE INTENDED TO EXPRESS DESIGN INTENT FOR A PROTOTYPICAL STARBUCKS STORE (WHICH IS SUBJECT TO CHANGE AT ANYTIME) AND DO NOT REFLECT ACTUAL SITE CONDITIONS. NEITHER PARTY SHALL HAVE ANY OBLIGATION NOR LIABILITY TO THE OTHER (EXCEPT STATED ABOVE) UNTIL A WRITTEN AGREEMENT IS FULLY EXECUTED BY BOTH PARTIES.

STARBUCKS TEMPLATE VERSION: i2021-09-13

Design Forum Architects Inc.
2056 Byers Rd
Miamisburg, OH 45342
Tel: (844) 804-7700
Donald J. Rethman
Architect In Charge
License: AR0017303

Design Forum Engineering
2056 Byers Rd
Miamisburg, OH 45342
Tel: (844) 804-7700
Timothy L. Raberding, PE
Professional Engineer
License: 62078

PROJECT NAME:
US 98 & GRIFFIN RD

PROJECT ADDRESS:
3105 US-98 NORTH
LAKELAND, FLORIDA 33801

STORE #:	80004
PROJECT #:	96892-001
ISSUE DATE:	2025-10-10
DESIGNER:	ASHLEY SUEIRAS
PRODUCTION DESIGNER:	ANDY MCLOUD
CHECKED BY:	DONALD RETHMAN

Revision Schedule

Rev	Date	By	Description
2	08/26/25		REV-2

SHEET TITLE:
PERSPECTIVE VIEW

SCALE: NO SCALE

SHEET NUMBER:
I-206

10/9/2025 9:55:05 AM C:\Users\julia.gray\Documents\96892-001_80004_US 98 & Griffin Rd, FL_2025_Julia.gray\FRYY6.rvt

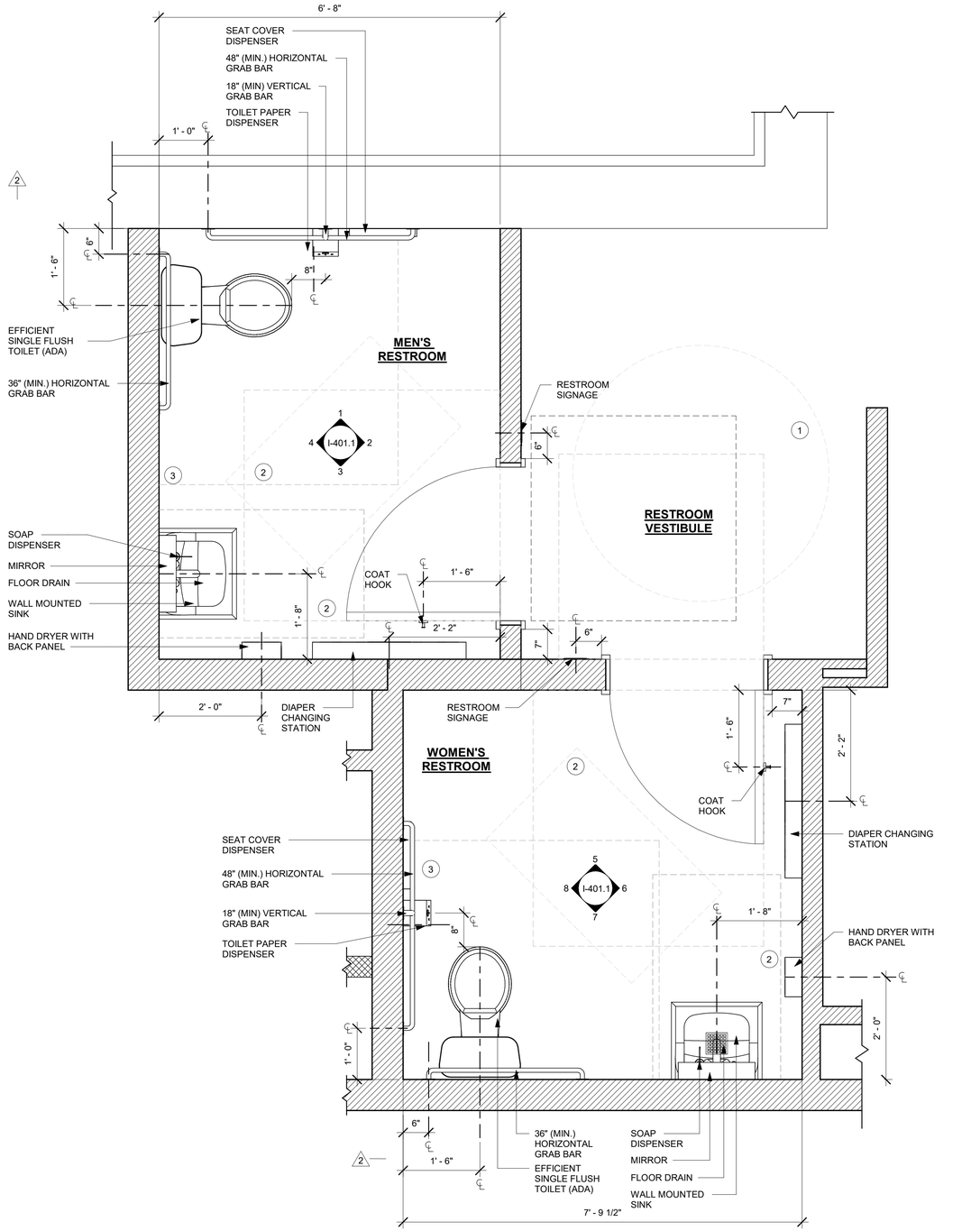

1 ENLARGED RESTROOM PLAN

Scale: 3/4" = 1'-0"

N

0 1' 2' 3'

Scale: 3/4" = 1'-0"

GENERAL NOTES

A. GENERAL CONTRACTOR TO VERIFY ALL DIMENSIONS AND NOTIFY STARBUCKS CONSTRUCTION MANAGER OF ANY DISCREPANCIES PRIOR TO CONSTRUCTION.

B. ALL DIMENSIONS ARE TO BE TAKEN FROM A DESIGNATED DATUM POINT.

C. DIMENSIONS ARE TO FACE OF FINISHED SURFACE UNLESS OTHERWISE NOTED.

D. DIAPER CHANGING STATION IS TO BE INSTALLED PER MANUFACTURER'S INSTRUCTIONS. UNIT IS TO BE FASTENED TO STRUCTURE AT ALL SIX CHASSIS ATTACHMENT POINTS.

E. LOCATE DIAPER CHANGING STATION AS SHOWN TO ALLOW NECESSARY CLEARANCE FOR OPERATION OF ALL RESTROOM FIXTURES. LOCATION SHALL NOT IMPEDE ACCESS, EGRESS, OR DOOR SWING.

F. ALL RESTROOM ACCESSORY MOUNTING HEIGHTS AND CLEARANCES SHALL COMPLY WITH THE ACCESSIBILITY REQUIREMENTS OF THE LOCAL JURISDICTION.

DIAPER CHANGING STATION NOTES

1. CHANGING STATION IS TO BE INSTALLED PER MANUFACTURER'S INSTRUCTIONS. UNIT IS TO BE FASTENED TO STRUCTURE AT ALL SIX CHASSIS ATTACHMENT POINTS. STANDARD INSTALLATION IS ATTACHMENT TO WOOD STUDS AND/OR WOOD BLOCKING. FOR NON-STANDARD FRAMING CONDITIONS OTHER THAN CONCRETE, USE TOGGLER SNAPTOGGLE HEAVY DUTY TOGGLE BOLTS TO SECURELY ATTACH CHASSIS TO WALL. FOR CONCRETE WALLS, USE FISCHER S-PLUG FIXINGS TO ANCHOR FASTENERS. SUBSTITUTION OF FASTENERS OTHER THAN THE MANUFACTURER AND PRODUCT SPECIFIED IS NOT ALLOWED WITHOUT PRIOR APPROVAL. LOAD TEST AFTER INSTALLATION WITH 100 LB. WEIGHT FOR 15 MINUTES.

2. LOCATE STATION AS SHOWN TO ALLOW NECESSARY CLEARANCE FOR OPERATION OF ALL RESTROOM FIXTURES. LOCATION SHALL NOT IMPEDE ACCESS, EGRESS, OR DOOR SWING. VERIFY ANY ALTERNATE LOCATION OR INSTALLATION APPROACH WITH STARBUCKS PROJECT LEAD.

KEYED NOTES

2 1. 60" (1524mm) ADA TURNING DIAMETER.

2. 30" (760mm) X 48" (1200MM) CLEAR FLOOR SPACE.

2 3. 60" (1524mm) X 56" (1422MM) WATER CLOSET CLEAR FLOOR SPACE.

FOR CONSTRUCTION

© 2019 STARBUCKS COFFEE COMPANY

STARBUCKS®
2401 UTAH AVENUE SOUTH
SEATTLE, WASHINGTON 98134
(206) 318-1575

THESE DRAWINGS AND THE PROJECT MANUAL ARE CONFIDENTIAL AND SHALL REMAIN THE SOLE PROPERTY OF STARBUCKS CORPORATION, WHICH IS THE OWNER OF THE COPYRIGHT IN THIS WORK. THEY SHALL NOT BE REPRODUCED (IN WHOLE OR IN PART), SHARED WITH THIRD PARTIES OR USED IN ANY MANNER ON OTHER PROJECTS OR EXTENSIONS TO THIS PROJECT WITHOUT THE PRIOR WRITTEN CONSENT OF STARBUCKS CORPORATION. THESE DRAWINGS AND SPECIFICATIONS ARE INTENDED TO EXPRESS DESIGN INTENT FOR A PROTOTYPICAL STARBUCKS STORE (WHICH IS SUBJECT TO CHANGE AT ANYTIME) AND DO NOT REFLECT ACTUAL SITE CONDITIONS. NEITHER PARTY SHALL HAVE ANY OBLIGATION NOR LIABILITY TO THE OTHER (EXCEPT STATED ABOVE) UNTIL A WRITTEN AGREEMENT IS FULLY EXECUTED BY BOTH PARTIES.

STARBUCKS TEMPLATE VERSION: i2021-09-13

Design Forum Architects Inc.
2056 Byers Rd
Miamisburg, OH 45342
Tel: (844) 804-7700
Donald J. Rethman
Architect In Charge
License: AR0017303

Design Forum Engineering
2056 Byers Rd
Miamisburg, OH 45342
Tel: (844) 804-7700
Timothy L. Raberding, PE
Professional Engineer
License: 62078

PROJECT NAME:
US 98 & GRIFFIN RD

PROJECT ADDRESS:
3105 US-98 NORTH
LAKELAND, FLORIDA 33801

STORE #:	80004
PROJECT #:	96892-001
ISSUE DATE:	2025-10-10
DESIGNER:	ASHLEY SUEIRAS
PRODUCTION DESIGNER:	ANDY MCLOUD
CHECKED BY:	DONALD RETHMAN

Revision Schedule

Rev	Date	By	Description
2	08/26/25		REV-2

SHEET TITLE:
ENLARGED RESTROOM PLAN
SCALE: 3/4" = 1'-0"

SHEET NUMBER:
I-401

10/9/2025 9:55:06 AM C:\Users\julia.gray\Documents\96892-001_80004_US 98 & Griffin Rd, FL_2025_Julia.gray FRYY6.rvt

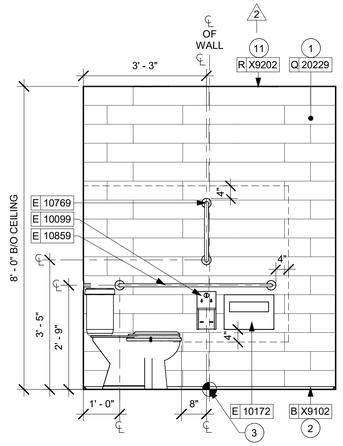

1 MEN'S RR - NORTHEAST
Scale: 1/2" = 1'-0"

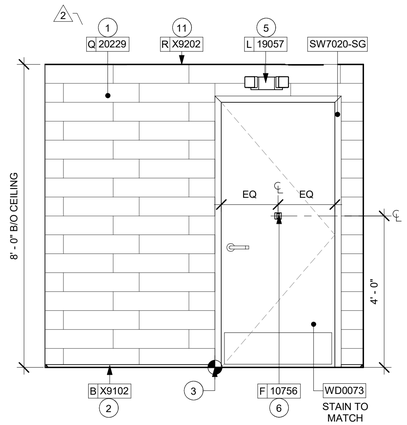

2 MEN'S RR - SOUTHEAST
Scale: 1/2" = 1'-0"

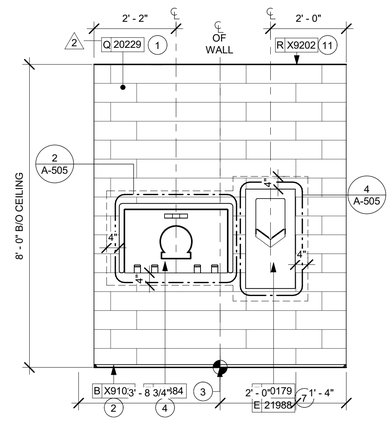

3 MEN'S RR - SOUTHWEST
Scale: 1/2" = 1'-0"

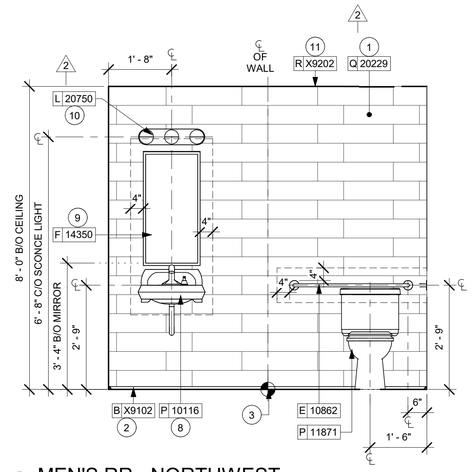

4 MEN'S RR - NORTHWEST
Scale: 1/2" = 1'-0"

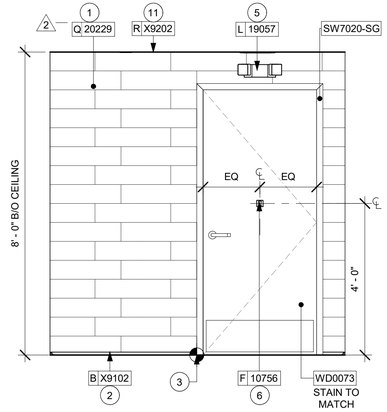

5 WOMEN'S RR - NORTHEAST
Scale: 1/2" = 1'-0"

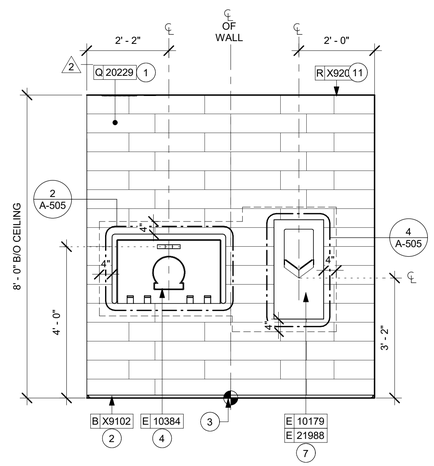

6 WOMEN'S RR - SOUTHEAST
Scale: 1/2" = 1'-0"

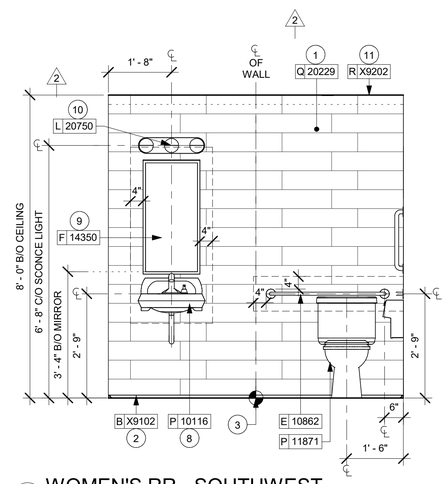

7 WOMEN'S RR - SOUTHWEST
Scale: 1/2" = 1'-0"

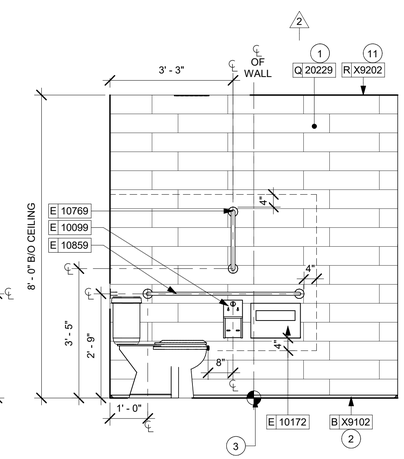

8 WOMEN'S RR - NORTHWEST
Scale: 1/2" = 1'-0"

0 1' 2' 4'
Scale: 1/2" = 1'-0"

GENERAL NOTES

A. GENERAL CONTRACTOR TO VERIFY ALL DIMENSIONS AND NOTIFY STARBUCKS CONSTRUCTION MANAGER OF ANY DISCREPANCIES PRIOR TO CONSTRUCTION.

B. ALL DIMENSIONS ARE TO BE TAKEN FROM A DESIGNATED DATUM POINT.

C. DIMENSIONS ARE TO FACE OF FINISHED SURFACE UNLESS OTHERWISE NOTED.

D. DIAPER CHANGING STATION IS TO BE INSTALLED PER MANUFACTURER'S INSTRUCTIONS. UNIT IS TO BE FASTENED TO STRUCTURE AT ALL SIX CHASSIS ATTACHMENT POINTS.

E. LOCATE DIAPER CHANGING STATION AS SHOWN TO ALLOW NECESSARY CLEARANCE FOR OPERATION OF ALL RESTROOM FIXTURES. LOCATION SHALL NOT IMPEDE ACCESS, EGRESS, OR DOOR SWING.

F. ALL RESTROOM ACCESSORY MOUNTING HEIGHTS AND CLEARANCES SHALL COMPLY WITH THE ACCESSIBILITY REQUIREMENTS OF THE LOCAL JURISDICTION.

DIAPER CHANGING STATION NOTES

1. CHANGING STATION IS TO BE INSTALLED PER MANUFACTURER'S INSTRUCTIONS. UNIT IS TO BE FASTENED TO STRUCTURE AT ALL SIX CHASSIS ATTACHMENT POINTS. STANDARD INSTALLATION IS ATTACHMENT TO WOOD STUDS AND/OR WOOD BLOCKING. FOR NON-STANDARD FRAMING CONDITIONS OTHER THAN CONCRETE, USE TOGGLER SNAPTOGGLE HEAVY DUTY TOGGLE BOLTS TO SECURELY ATTACH CHASSIS TO WALL. FOR CONCRETE WALLS, USE FISCHER S-PLUG FIXINGS TO ANCHOR FASTENERS. SUBSTITUTION OF FASTENERS OTHER THAN THE MANUFACTURER AND PRODUCT SPECIFIED IS NOT ALLOWED WITHOUT PRIOR APPROVAL. LOAD TEST AFTER INSTALLATION WITH 100 LB. WEIGHT FOR 15 MINUTES.

2. LOCATE STATION AS SHOWN TO ALLOW NECESSARY CLEARANCE FOR OPERATION OF ALL RESTROOM FIXTURES. LOCATION SHALL NOT IMPEDE ACCESS, EGRESS, OR DOOR SWING. VERIFY ANY ALTERNATE LOCATION OR INSTALLATION APPROACH WITH STARBUCKS PROJECT LEAD.

KEYED NOTES

1. INSTALL WALL TILE AT RESTROOMS AS INDICATED.
2. INSTALL SCHLUTER BASE AS INDICATED.
3. TILE START POINT WHERE INDICATED.
4. BABY CHANGING FIXTURE. GENERAL CONTRACTOR TO PROVIDE BLOCKING PER MANUFACTURER'S RECOMMENDATION.
5. INSTALL EMERGENCY LIGHT AS INDICATED.
6. INSTALL COAT HOOK. MOUNT AT CENTERLINE OF DOOR.
7. INSTALL HAND DRYER WITH BACK PANEL AS INDICATED.
8. WALL MOUNTED LAVATORY SINK INSTALLED WITH INSULATED BOOT AT EXPOSED PIPES.
9. CENTER MIRROR OVER LAVATORY SINK. MOUNT AT 40" (1015MM) MAX. TO BOTTOM EDGE OF REFLECTIVE SURFACE.
10. CENTER SCONCE LIGHTING OVER MIRROR.
11. INSTALL JOLLY SCHLUTER TRIM ABOVE RR WALL TILE AS INDICATED.

FOR CONSTRUCTION

© 2019 STARBUCKS COFFEE COMPANY

STARBUCKS®
2401 UTAH AVENUE SOUTH
SEATTLE, WASHINGTON 98134
(206) 318-1575

THESE DRAWINGS AND THE PROJECT MANUAL ARE CONFIDENTIAL AND SHALL REMAIN THE SOLE PROPERTY OF STARBUCKS CORPORATION, WHICH IS THE OWNER OF THE COPYRIGHT IN THIS WORK. THEY SHALL NOT BE REPRODUCED (IN WHOLE OR IN PART), SHARED WITH THIRD PARTIES OR USED IN ANY MANNER ON OTHER PROJECTS OR EXTENSIONS TO THIS PROJECT WITHOUT THE PRIOR WRITTEN CONSENT OF STARBUCKS CORPORATION. THESE DRAWINGS AND SPECIFICATIONS ARE INTENDED TO EXPRESS DESIGN INTENT FOR A PROTOTYPICAL STARBUCKS STORE (WHICH IS SUBJECT TO CHANGE AT ANYTIME) AND DO NOT REFLECT ACTUAL SITE CONDITIONS. NEITHER PARTY SHALL HAVE ANY OBLIGATION NOR LIABILITY TO THE OTHER (EXCEPT STATED ABOVE) UNTIL A WRITTEN AGREEMENT IS FULLY EXECUTED BY BOTH PARTIES.

STARBUCKS TEMPLATE VERSION: i2021-09-13

Design Forum Architects Inc.
2056 Byers Rd
Miamisburg, OH 45342
Tel: (844) 804-7700
Donald J. Rethman
Architect In Charge
License: AR0017303

Design Forum Engineering
2056 Byers Rd
Miamisburg, OH 45342
Tel: (844) 804-7700
Timothy L. Raberding, PE
Professional Engineer
License: 62078

PROJECT NAME:
US 98 & GRIFFIN RD

PROJECT ADDRESS:
3105 US-98 NORTH
LAKELAND, FLORIDA 33801

STORE #:	80004
PROJECT #:	96892-001
ISSUE DATE:	2025-10-10
DESIGNER:	ASHLEY SUEIRAS
PRODUCTION DESIGNER:	ANDY MCLOUD
CHECKED BY:	DONALD RETHMAN

Revision Schedule

Rev	Date	By	Description
2	08/26/25		REV-2

SHEET TITLE:
ENLARGED RESTROOM ELEVATIONS
SCALE: 1/2" = 1'-0"

SHEET NUMBER:
I-401.1

10/9/2025 9:55:09 AM C:\Users\julia.gray\Documents\96892-001_80004_US 98 & Griffin Rd, FL_2025_Julia.grayFRYY6.rvt

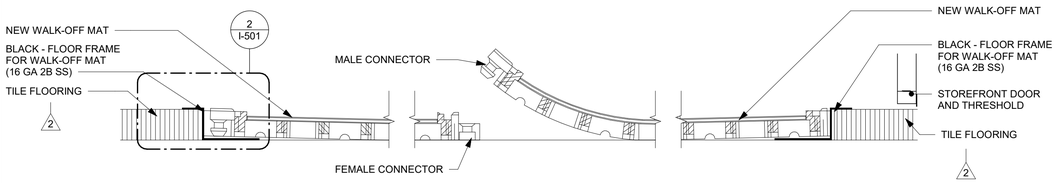

1 TRANSITION - TILE TO WALK-OFF MAT
Scale: 1" = 1'-0"

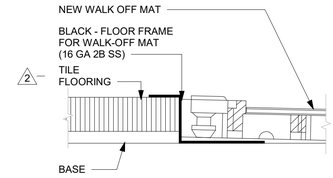

2 ENLARGED SECTION PROFILE
Scale: 1 1/2" = 1'-0"

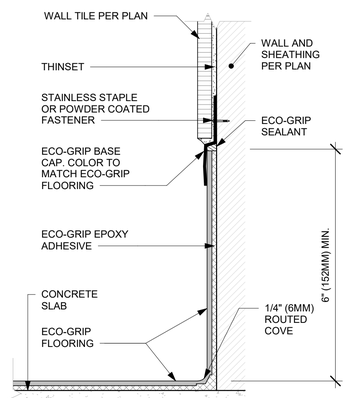

4 ECO-GRIP BASE CAP WITH TILED WALL
Scale: 6" = 1'-0"

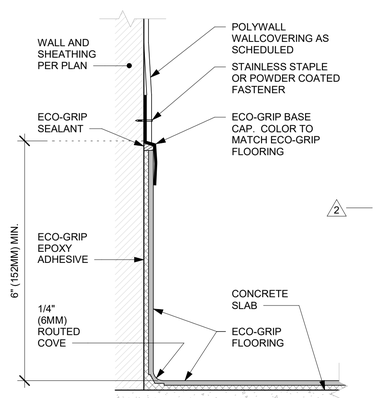

5 ECO-GRIP BASE CAP WITH FRP
Scale: 6" = 1'-0"

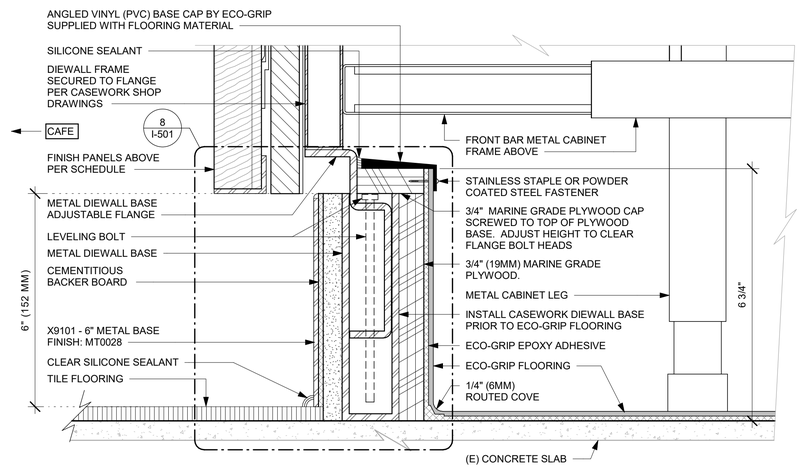

6 METAL BASE AC FRONT BAR CABINET ON LEGS
Scale: 6" = 1'-0"

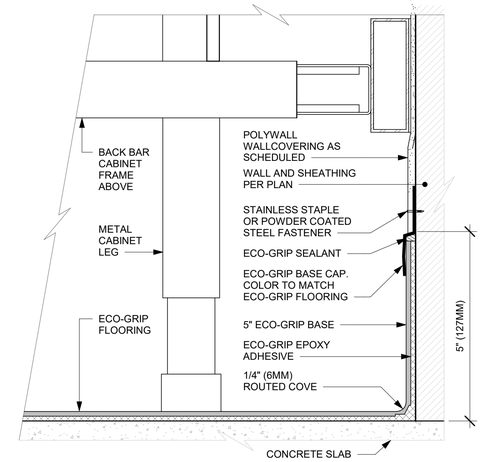

7 ECO-GRIP AC BACK BAR CABINET ON LEGS
Scale: 6" = 1'-0"

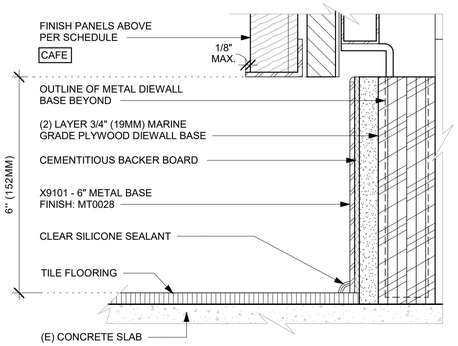

8 AC FRONT BAR CABINET PLYWOOD DIEWALL BASE
Scale: 6" = 1'-0"

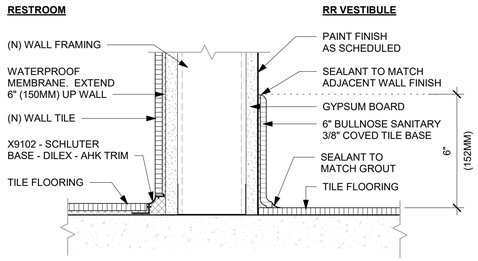

9 SCHLUTER BASE AT RESTROOM WALL
Scale: 3" = 1'-0"

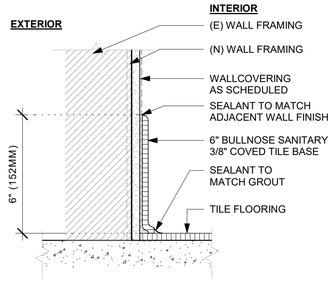

10 TILE BASE AT EXTERIOR WALL
Scale: 3" = 1'-0"

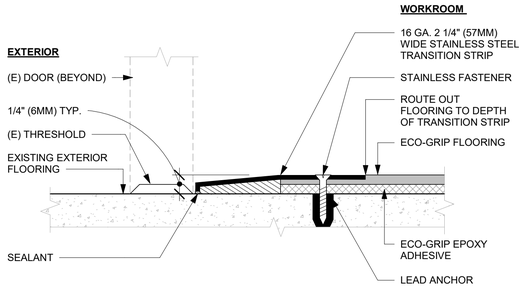

11 ECO-GRIP TO (E) CONCRETE TRANSITION
Scale: 12" = 1'-0"

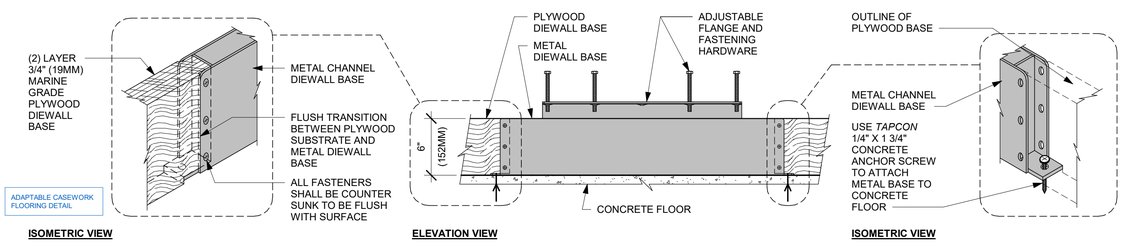

12 AC FRONT BAR DIEWALL METAL TO WOOD BASE TRANSITION

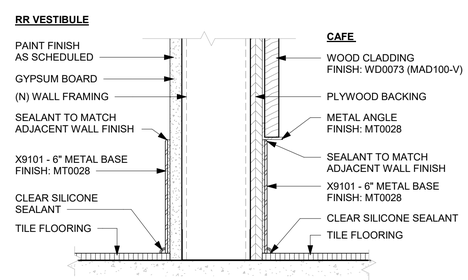

13 METAL BASE AT WOOD CLADDING
Scale: 3" = 1'-0"

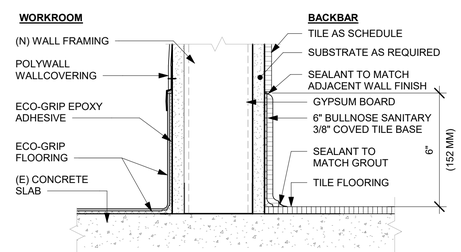

14 TILE BASE AT INTERIOR WALL
Scale: 3" = 1'-0"

FOR CONSTRUCTION

© 2019 STARBUCKS COFFEE COMPANY

STARBUCKS®
2401 UTAH AVENUE SOUTH
SEATTLE, WASHINGTON 98134
(206) 318-1575

THESE DRAWINGS AND THE PROJECT MANUAL ARE CONFIDENTIAL AND SHALL REMAIN THE SOLE PROPERTY OF STARBUCKS CORPORATION, WHICH IS THE OWNER OF THE COPYRIGHT IN THIS WORK. THEY SHALL NOT BE REPRODUCED (IN WHOLE OR IN PART), SHARED WITH THIRD PARTIES OR USED IN ANY MANNER ON OTHER PROJECTS OR EXTENSIONS TO THIS PROJECT WITHOUT THE PRIOR WRITTEN CONSENT OF STARBUCKS CORPORATION. THESE DRAWINGS AND SPECIFICATIONS ARE INTENDED TO EXPRESS DESIGN INTENT FOR A PROTOTYPICAL STARBUCKS STORE (WHICH IS SUBJECT TO CHANGE AT ANYTIME) AND DO NOT REFLECT ACTUAL SITE CONDITIONS. NEITHER PARTY SHALL HAVE ANY OBLIGATION NOR LIABILITY TO THE OTHER (EXCEPT STATED ABOVE) UNTIL A WRITTEN AGREEMENT IS FULLY EXECUTED BY BOTH PARTIES.

STARBUCKS TEMPLATE VERSION: i2021-09-13

Design Forum Architects Inc.
2056 Byers Rd
Miamisburg, OH 45342
Tel: (844) 804-7700
Donald J. Rethman
Architect In Charge
License: AR0017303

Design Forum Engineering
2056 Byers Rd
Miamisburg, OH 45342
Tel: (844) 804-7700
Timothy L. Raberding, PE
Professional Engineer
License: 62078

PROJECT NAME:
US 98 & GRIFFIN RD

PROJECT ADDRESS:
3105 US-98 NORTH
LAKELAND, FLORIDA 33801

STORE #:	80004
PROJECT #:	96892-001
ISSUE DATE:	2025-10-10
DESIGNER:	ASHLEY SUEIRAS
PRODUCTION DESIGNER:	ANDY MCLOUD
CHECKED BY:	DONALD RETHMAN

Revision Schedule

Rev	Date	By	Description
2	08/26/25		REV-2

SHEET TITLE:
FLOOR FINISH DETAILS

SCALE: AS SHOWN

SHEET NUMBER:
I-501

10/9/2025 9:55:10 AM C:\Users\julia.gray\Documents\96892-001_80004_US 98 & Griffin Rd, FL_2025_Julia.gray\FRYY6.rvt

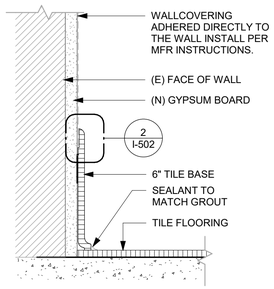

1 VINYL WALLCOVERING
Scale: 3" = 1'-0"

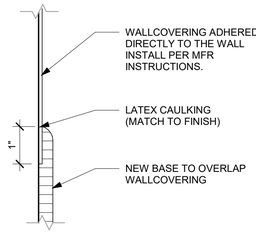

2 VINYL WALLCOVERING AT TILE BASE
Scale: 6" = 1'-0"

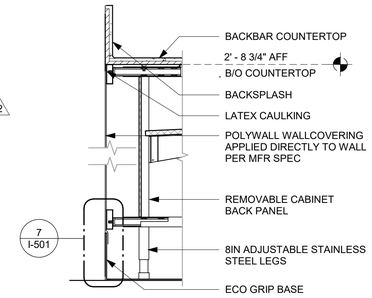

3 FRP AT BACKLINE CABINETS
Scale: 1 1/2" = 1'-0"

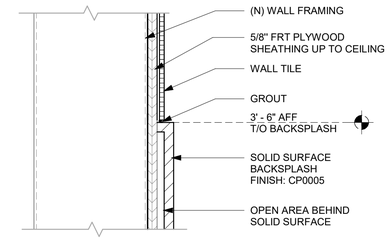

4 WALL TILE ABOVE SS BACKSPLASH
Scale: 3" = 1'-0"

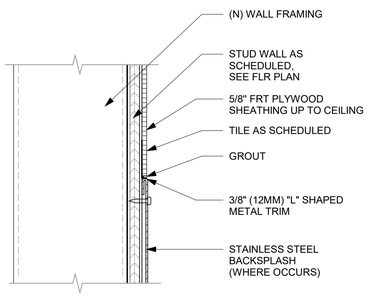

5 WALL TILE ABOVE SST BACKSPLASH
Scale: 3" = 1'-0"

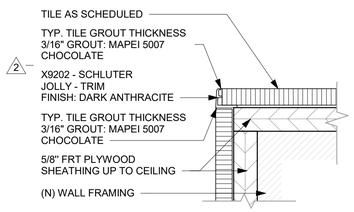

6 TILE CORNER - SCHLUTER TRIM
Scale: 6" = 1'-0"

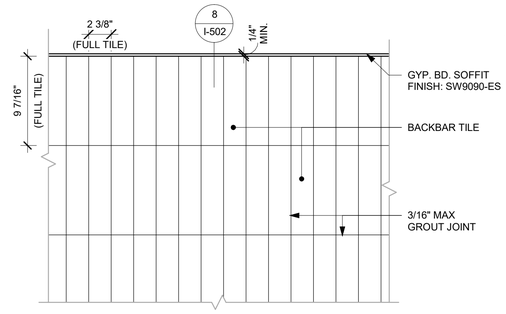

7 BACKBAR WALL TILE PATTERN
Scale: 1 1/2" = 1'-0"

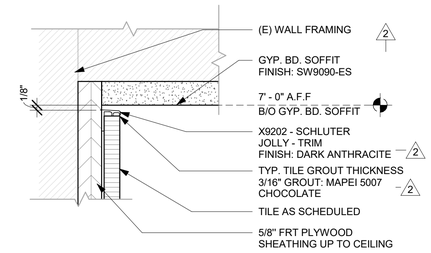

8 TILE TOP TRIM AT CEILING TRANSITION
Scale: 6" = 1'-0"

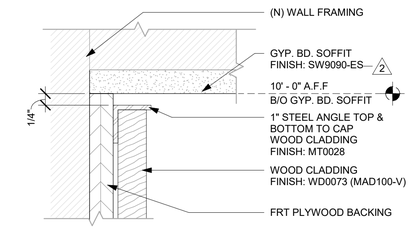

9 DETAIL AT CLADDING TOP
Scale: 6" = 1'-0"

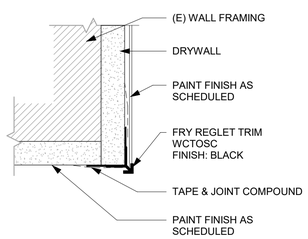

10 WALLCOVERING CORNER TRIM DETAIL
Scale: 6" = 1'-0"

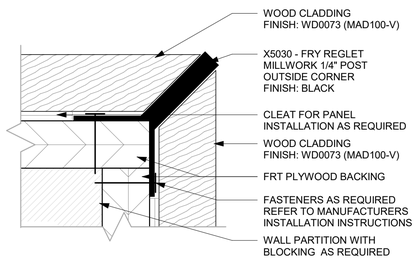

11 Y-TRIM DETAIL AT WOOD CORNER
Scale: 12" = 1'-0"

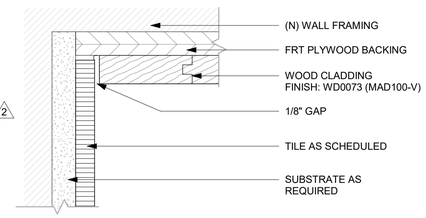

12 TRANSITION - WOOD CLADDING TO TILE
Scale: 6" = 1'-0"

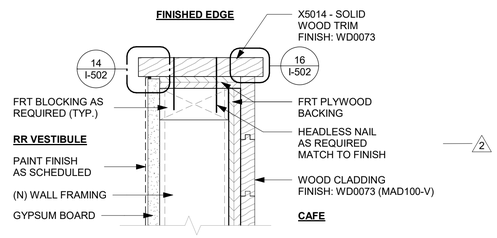

13 X5014 - FINISH EDGE AT RR VESTIBULE
Scale: 3" = 1'-0"

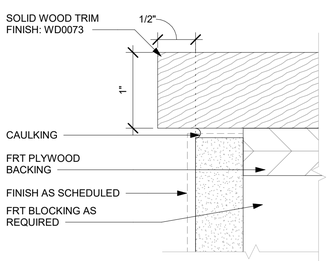

14 WOOD CAULKING DETAIL
Scale: 12" = 1'-0"

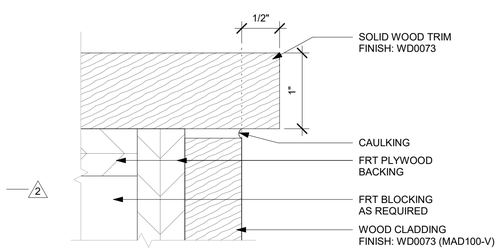

16 CAULKING DETAIL AT WOOD CLADDING
Scale: 12" = 1'-0"

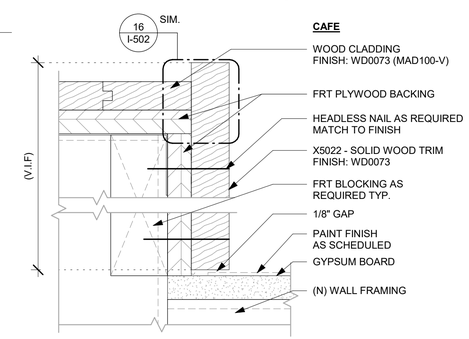

17 X5022 - FINISH EDGE AT MERCH
Scale: 6" = 1'-0"

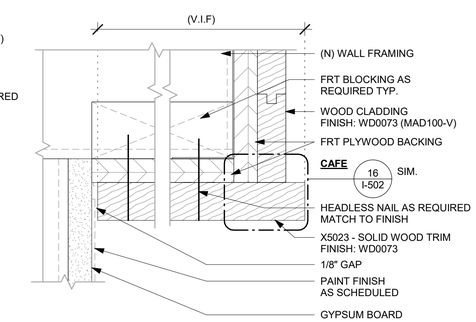

18 X5023 - FINISH EDGE AT MERCH
Scale: 6" = 1'-0"

FOR CONSTRUCTION

© 2019 STARBUCKS COFFEE COMPANY

STARBUCKS®
2401 UTAH AVENUE SOUTH
SEATTLE, WASHINGTON 98134
(206) 318-1575

THESE DRAWINGS AND THE PROJECT MANUAL ARE CONFIDENTIAL AND SHALL REMAIN THE SOLE PROPERTY OF STARBUCKS CORPORATION, WHICH IS THE OWNER OF THE COPYRIGHT IN THIS WORK. THEY SHALL NOT BE REPRODUCED (IN WHOLE OR IN PART), SHARED WITH THIRD PARTIES OR USED IN ANY MANNER ON OTHER PROJECTS OR EXTENSIONS TO THIS PROJECT WITHOUT THE PRIOR WRITTEN CONSENT OF STARBUCKS CORPORATION. THESE DRAWINGS AND SPECIFICATIONS ARE INTENDED TO EXPRESS DESIGN INTENT FOR A PROTOTYPICAL STARBUCKS STORE (WHICH IS SUBJECT TO CHANGE AT ANYTIME) AND DO NOT REFLECT ACTUAL SITE CONDITIONS. NEITHER PARTY SHALL HAVE ANY OBLIGATION NOR LIABILITY TO THE OTHER (EXCEPT STATED ABOVE) UNTIL A WRITTEN AGREEMENT IS FULLY EXECUTED BY BOTH PARTIES.

STARBUCKS TEMPLATE VERSION: i2021-09-13

Design Forum Architects Inc.
2056 Byers Rd
Miamisburg, OH 45342
Tel: (844) 804-7700
Donald J. Rethman
Architect In Charge
License: AR0017303

Design Forum Engineering
2056 Byers Rd
Miamisburg, OH 45342
Tel: (844) 804-7700
Timothy L. Raberding, PE
Professional Engineer
License: 62078

PROJECT NAME:
US 98 & GRIFFIN RD

PROJECT ADDRESS:
3105 US-98 NORTH
LAKELAND, FLORIDA 33801

STORE #:	80004
PROJECT #:	96892-001
ISSUE DATE:	2025-10-10
DESIGNER:	ASHLEY SUEIRAS
PRODUCTION DESIGNER:	ANDY MCLOUD
CHECKED BY:	DONALD RETHMAN

Revision Schedule

Rev	Date	By	Description
2	08/26/25		REV-2

SHEET TITLE:
WALL FINISH DETAILS

SCALE: AS SHOWN

SHEET NUMBER:
I-502

10/9/2025 9:55:12 AM C:\Users\julia.gray\Documents\96892-001_80004_US 98 & Griffin Rd, FL_2025_Julia.gray\FRYY6.rvt

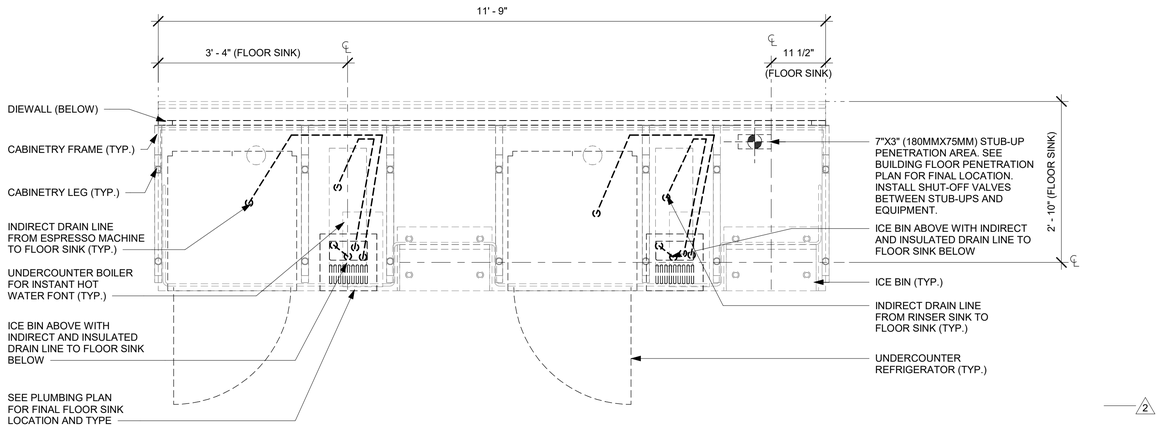

UNDER COUNTER

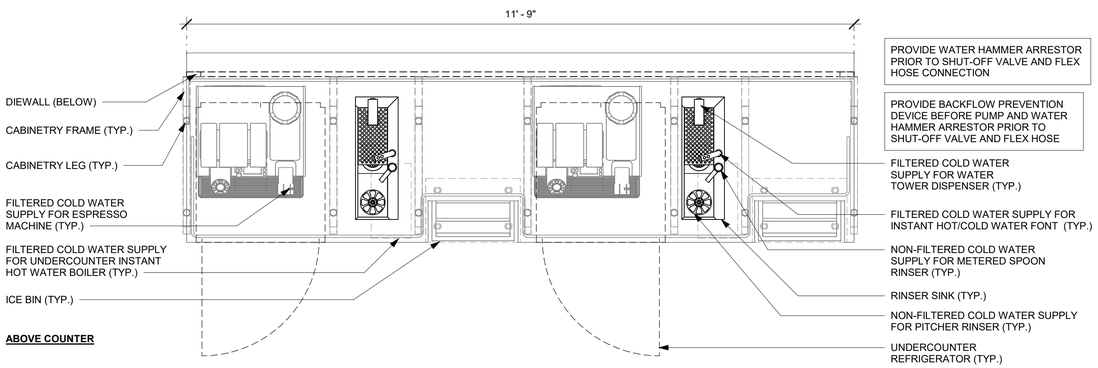

ABOVE COUNTER

1 ESPRESSO - PLUMBING FOR REFERENCE ONLY

Scale: 3/4" = 1'-0"

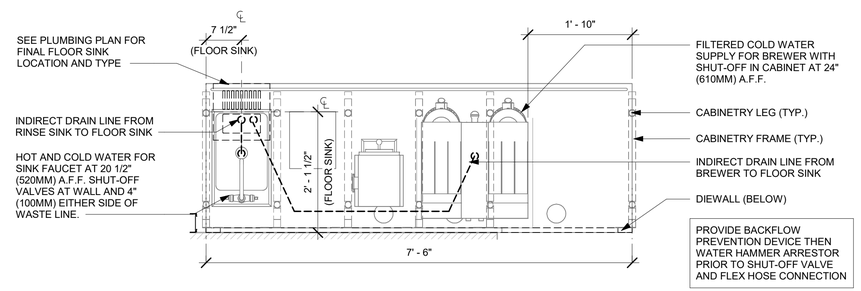

2 BREW - PLUMBING FOR REFERENCE ONLY

Scale: 3/4" = 1'-0"

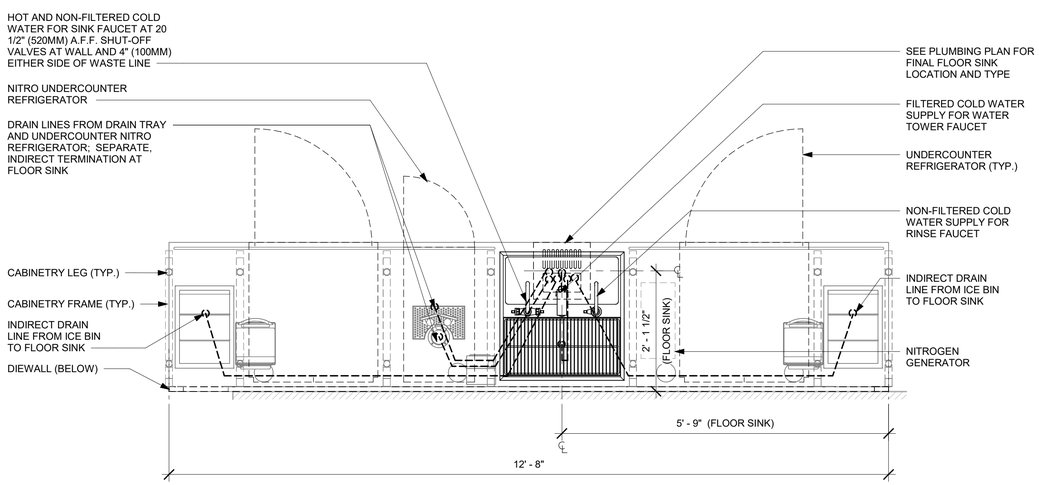

3 CBE - PLUMBING FOR REFERENCE ONLY

Scale: 3/4" = 1'-0"

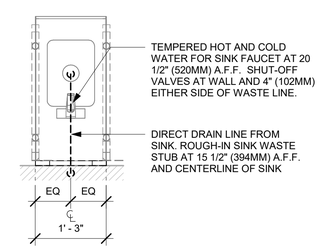

4 HAND SINK - PLUMBING FOR REFERENCE ONLY

Scale: 3/4" = 1'-0"

FOR CONSTRUCTION

© 2019 STARBUCKS COFFEE COMPANY

STARBUCKS®
2401 UTAH AVENUE SOUTH
SEATTLE, WASHINGTON 98134
(206) 318-1575

THESE DRAWINGS AND THE PROJECT MANUAL ARE CONFIDENTIAL AND SHALL REMAIN THE SOLE PROPERTY OF STARBUCKS CORPORATION, WHICH IS THE OWNER OF THE COPYRIGHT IN THIS WORK. THEY SHALL NOT BE REPRODUCED (IN WHOLE OR IN PART), SHARED WITH THIRD PARTIES OR USED IN ANY MANNER ON OTHER PROJECTS OR EXTENSIONS TO THIS PROJECT WITHOUT THE PRIOR WRITTEN CONSENT OF STARBUCKS CORPORATION. THESE DRAWINGS AND SPECIFICATIONS ARE INTENDED TO EXPRESS DESIGN INTENT FOR A PROTOTYPICAL STARBUCKS STORE (WHICH IS SUBJECT TO CHANGE AT ANYTIME) AND DO NOT REFLECT ACTUAL SITE CONDITIONS. NEITHER PARTY SHALL HAVE ANY OBLIGATION NOR LIABILITY TO THE OTHER (EXCEPT STATED ABOVE) UNTIL A WRITTEN AGREEMENT IS FULLY EXECUTED BY BOTH PARTIES.

STARBUCKS TEMPLATE VERSION: i2021-09-13

Design Forum Architects Inc.
2056 Byers Rd
Miamisburg, OH 45342
Tel: (844) 804-7700
Donald J. Rethman
Architect In Charge
License: AR0017303

Design Forum Engineering
2056 Byers Rd
Miamisburg, OH 45342
Tel: (844) 804-7700
Timothy L. Raberding, PE
Professional Engineer
License: 62078

PROJECT NAME:
US 98 & GRIFFIN RD

PROJECT ADDRESS:
3105 US-98 NORTH
LAKELAND, FLORIDA 33801

STORE #:	80004
PROJECT #:	96892-001
ISSUE DATE:	2025-10-10
DESIGNER:	ASHLEY SUEIRAS
PRODUCTION DESIGNER:	ANDY MCLOUD
CHECKED BY:	DONALD RETHMAN

Revision Schedule

Rev	Date	By	Description
2	08/26/25		REV-2

SHEET TITLE:
INTERIOR DETAILS

SCALE: 3/4" = 1'-0"

SHEET NUMBER:
I-503

10/9/2025 9:55:13 AM C:\Users\julia.gray\Documents\96892-001_80004_US 98 & Griffin Rd, FL_2025_Julia.grayFRYY6.rvt

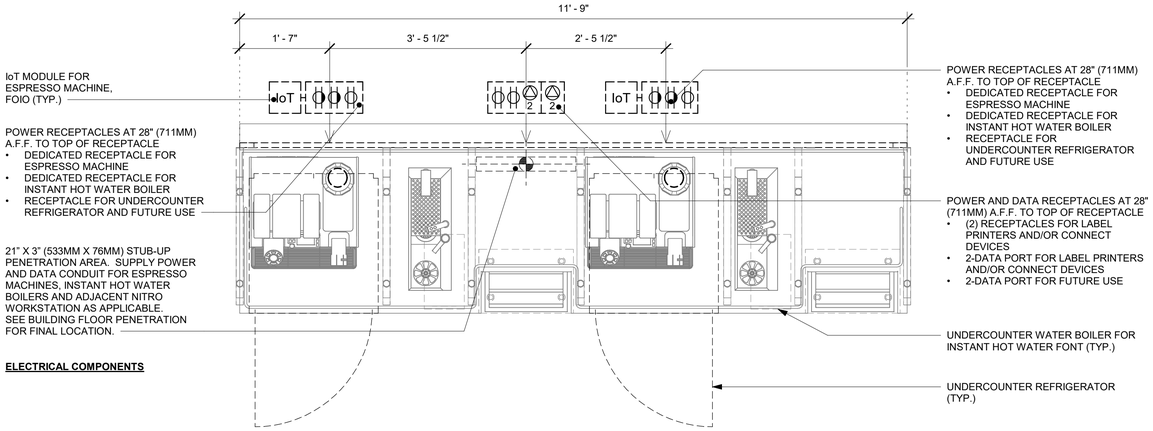

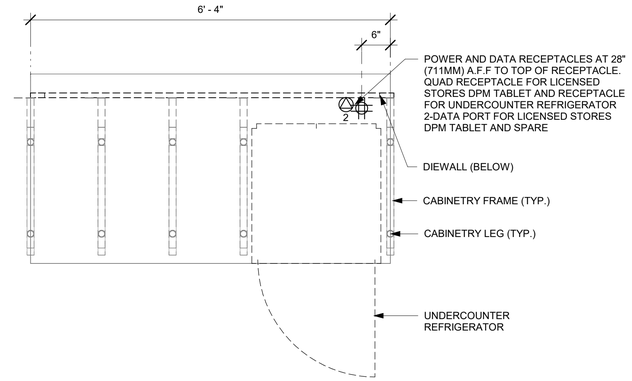

2 HOS - ELECTRICAL FOR REFERENCE ONLY

Scale: 3/4" = 1'-0"

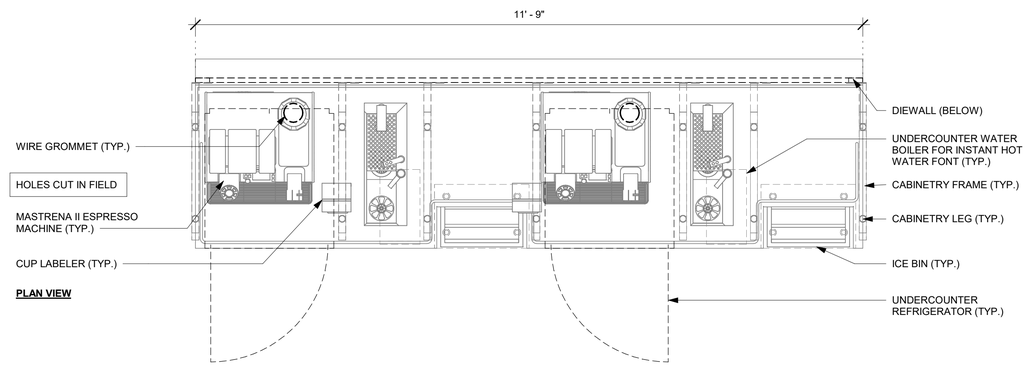

1 ESPRESSO - ELECTRICAL FOR REFERENCE ONLY

Scale: 3/4" = 1'-0"

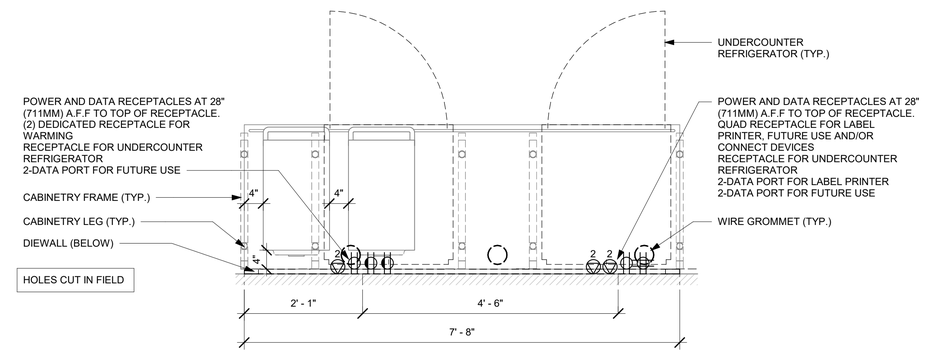

3 WARMING - ELECTRICAL FOR REFERENCE ONLY

Scale: 3/4" = 1'-0"

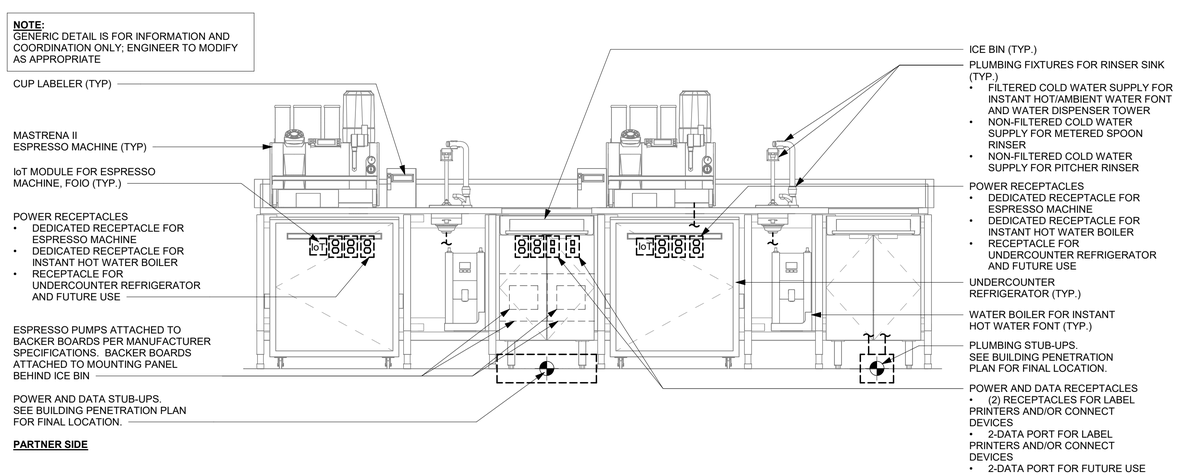

4 GENERIC METRO BAR MEP DIAGRAM

Scale: 3/4" = 1'-0"

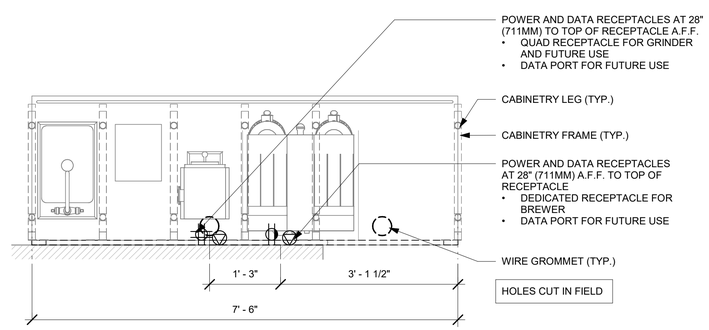

5 BREW - ELECTRICAL FOR REFERENCE ONLY

Scale: 3/4" = 1'-0"

FOR CONSTRUCTION

© 2019 STARBUCKS COFFEE COMPANY

STARBUCKS®
2401 UTAH AVENUE SOUTH
SEATTLE, WASHINGTON 98134
(206) 318-1575

THESE DRAWINGS AND THE PROJECT MANUAL ARE CONFIDENTIAL AND SHALL REMAIN THE SOLE PROPERTY OF STARBUCKS CORPORATION, WHICH IS THE OWNER OF THE COPYRIGHT IN THIS WORK. THEY SHALL NOT BE REPRODUCED (IN WHOLE OR IN PART), SHARED WITH THIRD PARTIES OR USED IN ANY MANNER ON OTHER PROJECTS OR EXTENSIONS TO THIS PROJECT WITHOUT THE PRIOR WRITTEN CONSENT OF STARBUCKS CORPORATION. THESE DRAWINGS AND SPECIFICATIONS ARE INTENDED TO EXPRESS DESIGN INTENT FOR A PROTOTYPICAL STARBUCKS STORE (WHICH IS SUBJECT TO CHANGE AT ANYTIME) AND DO NOT REFLECT ACTUAL SITE CONDITIONS. NEITHER PARTY SHALL HAVE ANY OBLIGATION NOR LIABILITY TO THE OTHER (EXCEPT STATED ABOVE) UNTIL A WRITTEN AGREEMENT IS FULLY EXECUTED BY BOTH PARTIES.

STARBUCKS TEMPLATE VERSION: i2021-09-13

Design Forum Architects Inc.
2056 Byers Rd
Miamisburg, OH 45342
Tel: (844) 804-7700
Donald J. Rethman
Architect In Charge
License: AR0017303

Design Forum Engineering
2056 Byers Rd
Miamisburg, OH 45342
Tel: (844) 804-7700
Timothy L. Raberding, PE
Professional Engineer
License: 62078

PROJECT NAME:
US 98 & GRIFFIN RD

PROJECT ADDRESS:
3105 US-98 NORTH
LAKELAND, FLORIDA 33801

STORE #:	80004
PROJECT #:	96892-001
ISSUE DATE:	2025-10-10
DESIGNER:	ASHLEY SUEIRAS
PRODUCTION DESIGNER:	ANDY MCLOUD
CHECKED BY:	DONALD RETHMAN

Revision Schedule

Rev	Date	By	Description
2	08/26/25		REV-2

SHEET TITLE:
INTERIOR DETAILS

SCALE: 3/4" = 1'-0"

SHEET NUMBER:
I-504

10/9/2025 9:55:15 AM C:\Users\julia.gray\Documents\96892-001_80004_US 98 & Griffin Rd, FL_2025_Julia.gray\FRYY6.rvt

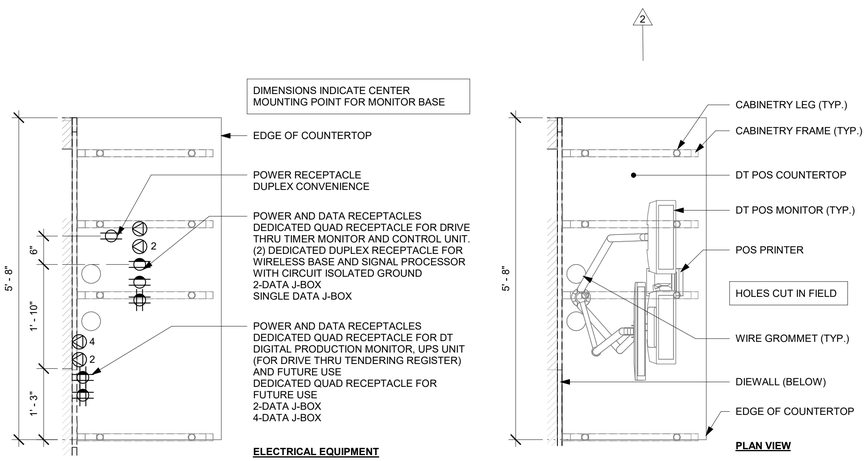

1 DT POS - ELECTRICAL FOR REFERENCE ONLY

Scale: 3/4" = 1'-0"

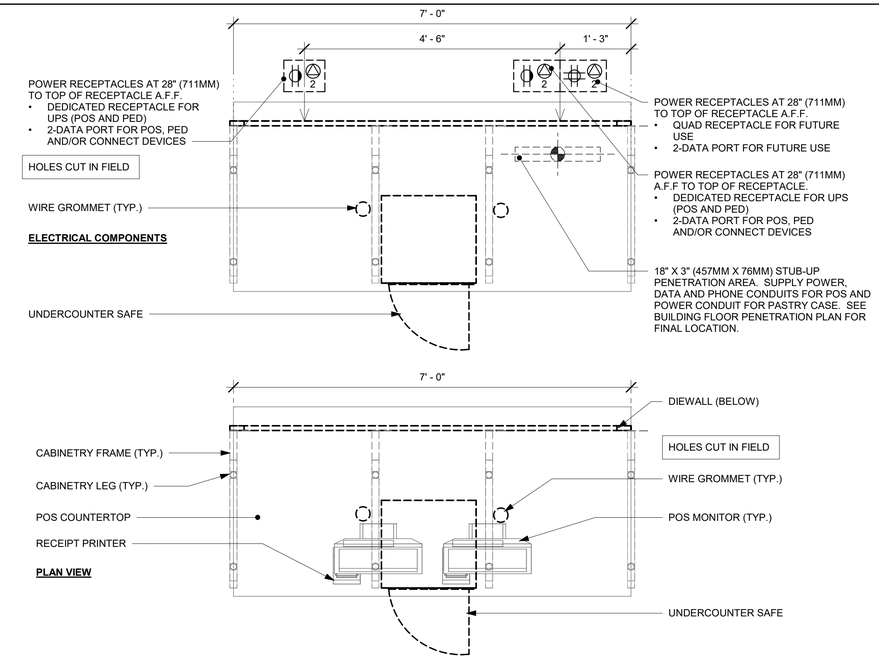

2 POS - ELECTRICAL FOR REFERENCE ONLY

Scale: 3/4" = 1'-0"

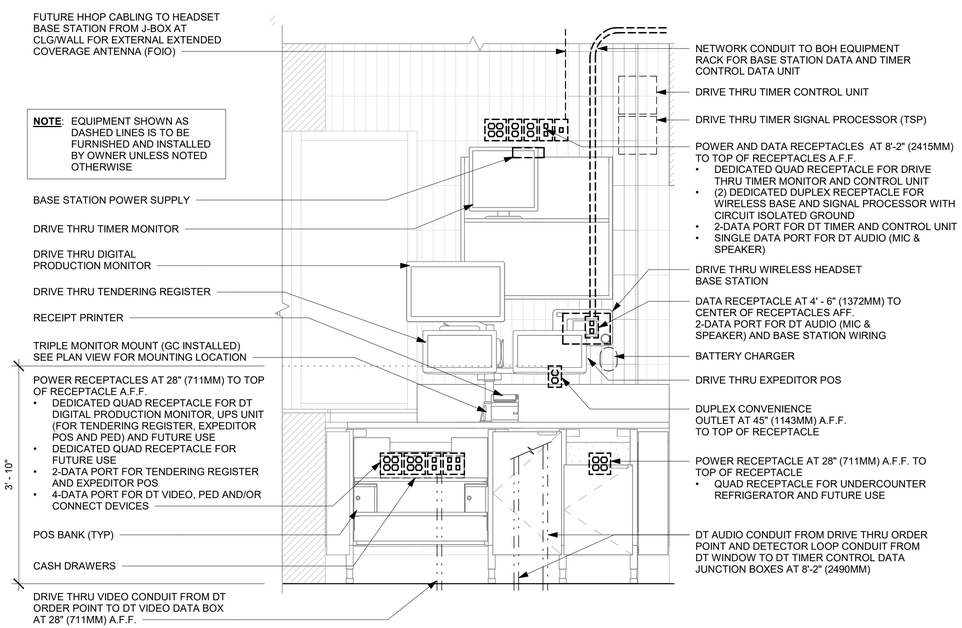

3 DRIVE - THRU POS DIAGRAM FOR REFERENCE ONLY

Scale: 3/4" = 1'-0"

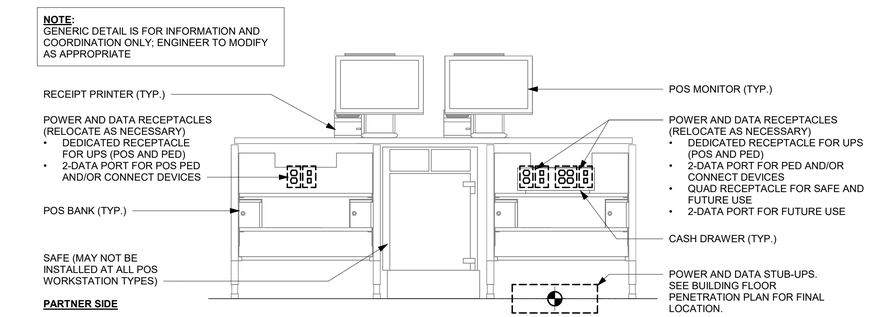

4 DOUBLE POS MEP DIAGRAM FOR REFERENCE ONLY

Scale: 3/4" = 1'-0"

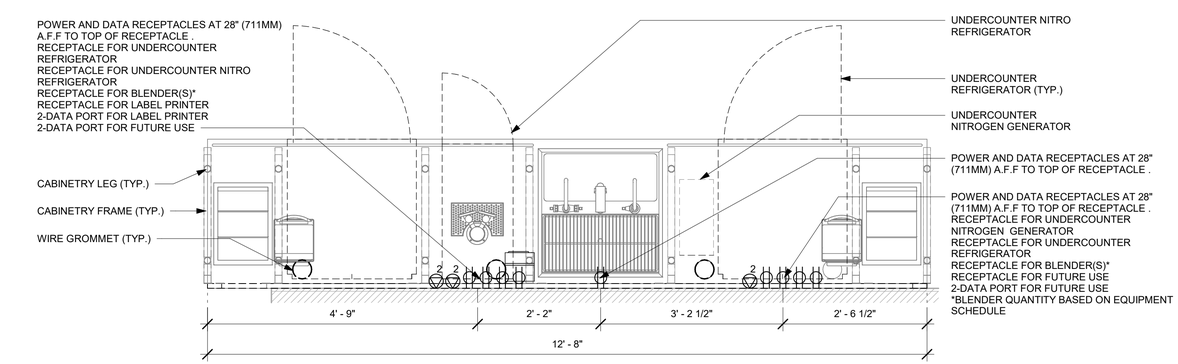

5 CBE - ELECTRICAL FOR REFERENCE ONLY

Scale: 3/4" = 1'-0"

FOR CONSTRUCTION

© 2019 STARBUCKS COFFEE COMPANY

STARBUCKS®
2401 UTAH AVENUE SOUTH
SEATTLE, WASHINGTON 98134
(206) 318-1575

THESE DRAWINGS AND THE PROJECT MANUAL ARE CONFIDENTIAL AND SHALL REMAIN THE SOLE PROPERTY OF STARBUCKS CORPORATION, WHICH IS THE OWNER OF THE COPYRIGHT IN THIS WORK. THEY SHALL NOT BE REPRODUCED (IN WHOLE OR IN PART), SHARED WITH THIRD PARTIES OR USED IN ANY MANNER ON OTHER PROJECTS OR EXTENSIONS TO THIS PROJECT WITHOUT THE PRIOR WRITTEN CONSENT OF STARBUCKS CORPORATION. THESE DRAWINGS AND SPECIFICATIONS ARE INTENDED TO EXPRESS DESIGN INTENT FOR A PROTOTYPICAL STARBUCKS STORE (WHICH IS SUBJECT TO CHANGE AT ANYTIME) AND DO NOT REFLECT ACTUAL SITE CONDITIONS. NEITHER PARTY SHALL HAVE ANY OBLIGATION NOR LIABILITY TO THE OTHER (EXCEPT STATED ABOVE) UNTIL A WRITTEN AGREEMENT IS FULLY EXECUTED BY BOTH PARTIES.

STARBUCKS TEMPLATE VERSION: i2021-09-13

Design Forum Architects Inc.
2056 Byers Rd
Miamisburg, OH 45342
Tel: (844) 804-7700
Donald J. Rethman
Architect In Charge
License: AR0017303

Design Forum Engineering
2056 Byers Rd
Miamisburg, OH 45342
Tel: (844) 804-7700
Timothy L. Raberding, PE
Professional Engineer
License: 62078

PROJECT NAME:
US 98 & GRIFFIN RD

PROJECT ADDRESS:
3105 US-98 NORTH
LAKELAND, FLORIDA 33801

STORE #:	80004
PROJECT #:	96892-001
ISSUE DATE:	2025-10-10
DESIGNER:	ASHLEY SUEIRAS
PRODUCTION DESIGNER:	ANDY MCLOUD
CHECKED BY:	DONALD RETHMAN

Revision Schedule

Rev	Date	By	Description
2	08/26/25		REV-2

SHEET TITLE:
INTERIOR DETAILS

SCALE: 3/4" = 1'-0"

SHEET NUMBER:
I-505

10/9/2025 9:55:16 AM C:\Users\julia.gray\Documents\96892-001_80004_US 98 & Griffin Rd, FL_2025_Julia.gray\FRYY6.rvt

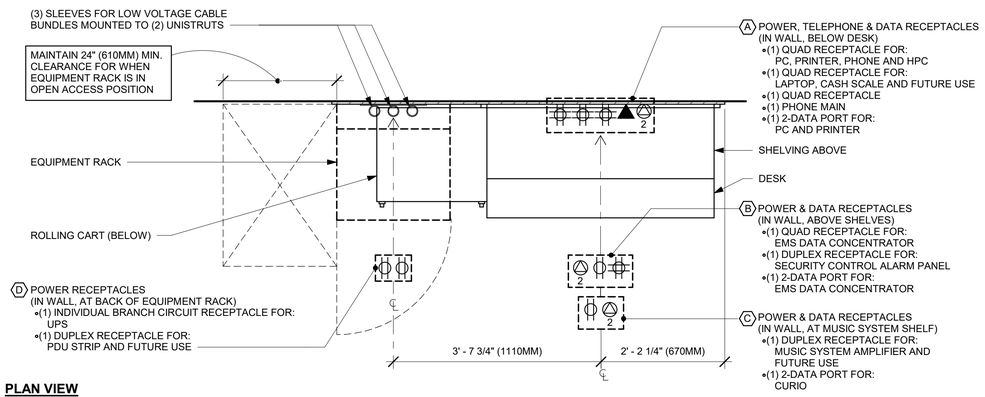

PLAN VIEW

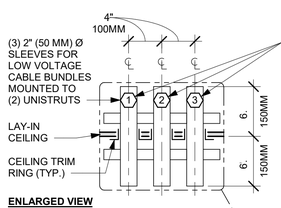

ENLARGED VIEW

LOW VOLTAGE CABLE BUNDLES		
1 POS	2 SECURITY	3 MUSIC
HIGH SPEED INTERNET	SECURITY PANEL	PLAY NETWORK
DEMARC EXTENSION	FUTURE USE	SPEAKERS
POS LAN	- - - - - - - -	- - - - - - - -
DT TIMER	- - - - - - - -	- - - - - - - -

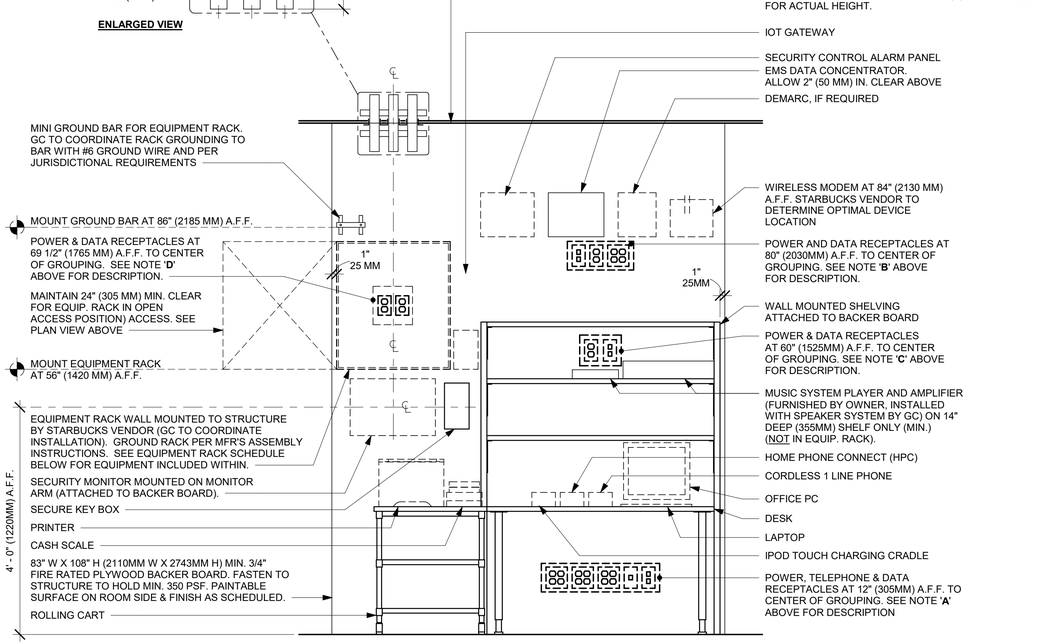

ELEVATION VIEW

NOTE:
EQUIPMENT SHOWN AS DASHED LINES IS TO BE FURNISHED AND INSTALLED BY OWNER UNLESS NOTED OTHERWISE.

EQUIPMENT RACK SCHEDULE		
UPS	NETWORK SWITCH	SECURITY RECORDER (NVR)
IPS EQUIPMENT	PATCH PANEL	SECURITY KEYBOARD
ROUTER	PRODUCTION CONTROLLER DEVICES	

1 MANAGER DESK (LEGACY) AND EQUIPMENT RACK LEFT - ELECTRICAL

Scale: 3/4" = 1'-0"

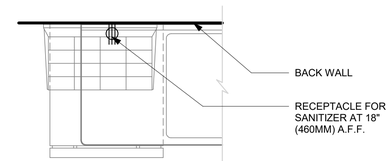

2 SANITIZING WORKSTATION - ELECTRICAL

Scale: 3/4" = 1'-0"

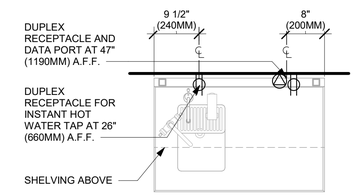

3 WATER FILLING STATION - ELECTRICAL

Scale: 3/4" = 1'-0"

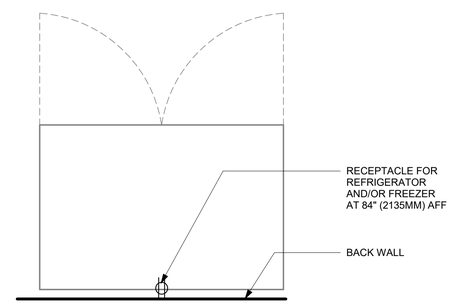

4 REFRIGERATOR/FREEZER - ELECTRICAL

Scale: 3/4" = 1'-0"

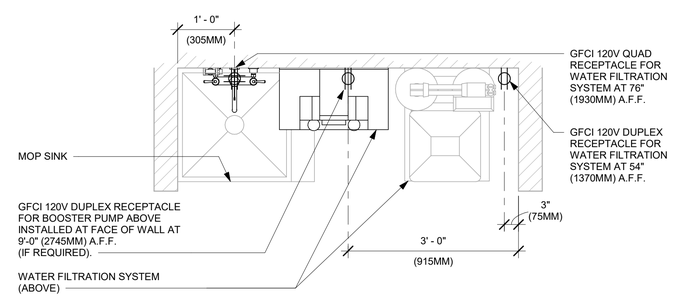

6 WATER FILTRATION - CONFIGURATION III

Scale: 3/4" = 1'-0"

FOR CONSTRUCTION

© 2019 STARBUCKS COFFEE COMPANY

STARBUCKS®
2401 UTAH AVENUE SOUTH
SEATTLE, WASHINGTON 98134
(206) 318-1575

THESE DRAWINGS AND THE PROJECT MANUAL ARE CONFIDENTIAL AND SHALL REMAIN THE SOLE PROPERTY OF STARBUCKS CORPORATION, WHICH IS THE OWNER OF THE COPYRIGHT IN THIS WORK. THEY SHALL NOT BE REPRODUCED (IN WHOLE OR IN PART), SHARED WITH THIRD PARTIES OR USED IN ANY MANNER ON OTHER PROJECTS OR EXTENSIONS TO THIS PROJECT WITHOUT THE PRIOR WRITTEN CONSENT OF STARBUCKS CORPORATION. THESE DRAWINGS AND SPECIFICATIONS ARE INTENDED TO EXPRESS DESIGN INTENT FOR A PROTOTYPICAL STARBUCKS STORE (WHICH IS SUBJECT TO CHANGE AT ANYTIME) AND DO NOT REFLECT ACTUAL SITE CONDITIONS. NEITHER PARTY SHALL HAVE ANY OBLIGATION NOR LIABILITY TO THE OTHER (EXCEPT STATED ABOVE) UNTIL A WRITTEN AGREEMENT IS FULLY EXECUTED BY BOTH PARTIES.

STARBUCKS TEMPLATE VERSION: i2021-09-13

Design Forum Architects Inc.
2056 Byers Rd
Miamisburg, OH 45342
Tel: (844) 804-7700
Donald J. Rethman
Architect In Charge
License: AR0017303

Design Forum Engineering
2056 Byers Rd
Miamisburg, OH 45342
Tel: (844) 804-7700
Timothy L. Raberding, PE
Professional Engineer
License: 62078

PROJECT NAME:
US 98 & GRIFFIN RD

PROJECT ADDRESS:
3105 US-98 NORTH
LAKELAND, FLORIDA 33801

STORE #:	80004
PROJECT #:	96892-001
ISSUE DATE:	2025-10-10
DESIGNER:	ASHLEY SUEIRAS
PRODUCTION DESIGNER:	ANDY MCLOUD
CHECKED BY:	DONALD RETHMAN

Revision Schedule

Rev	Date	By	Description
2	08/26/25		REV-2

SHEET TITLE:
INTERIOR DETAILS

SCALE: 3/4" = 1'-0"

SHEET NUMBER:
I-506

10/9/2025 9:55:17 AM C:\Users\julia.gray\Documents\96892-001_80004_US 98 & Griffin Rd, FL_2025_Julia.gray\FRYY6.rvt

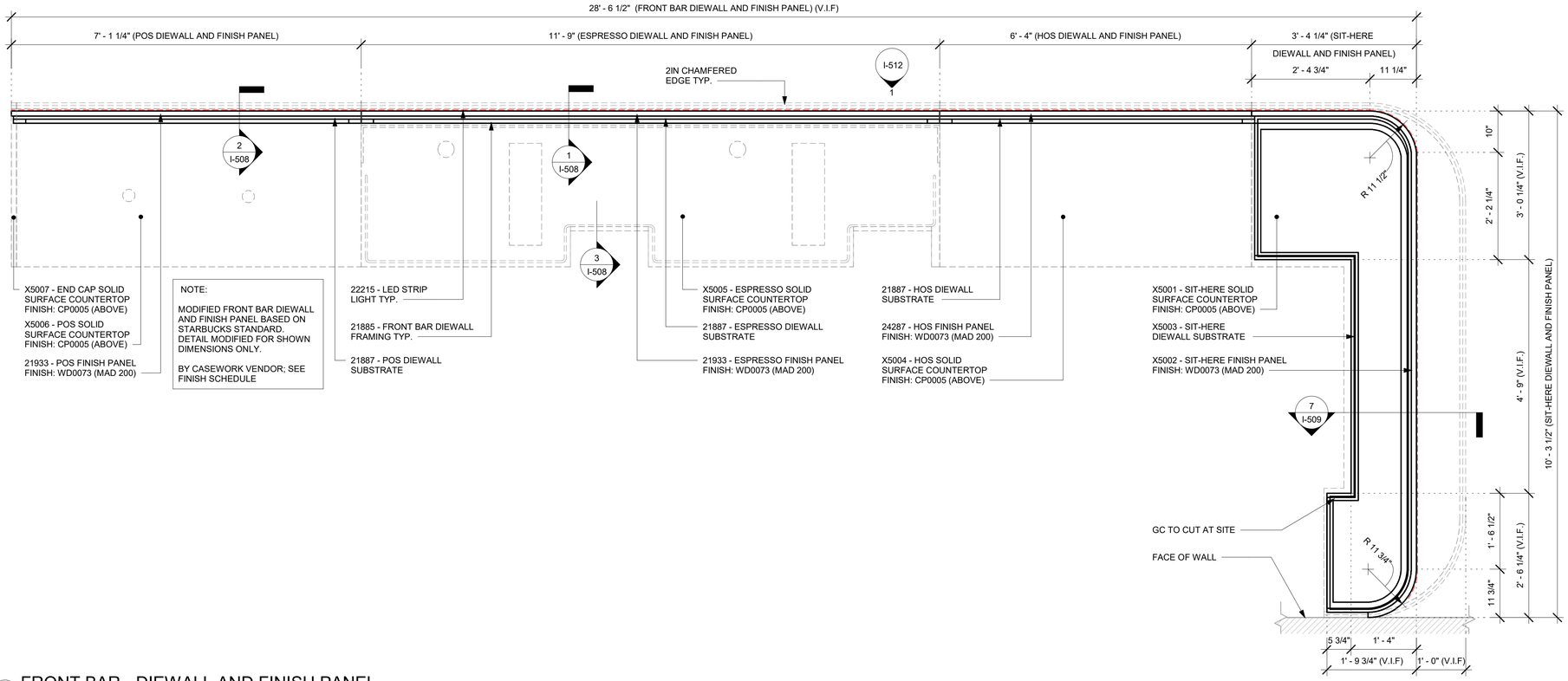

1 FRONT BAR - DIEWALL AND FINISH PANEL

Scale: 3/4" = 1'-0"

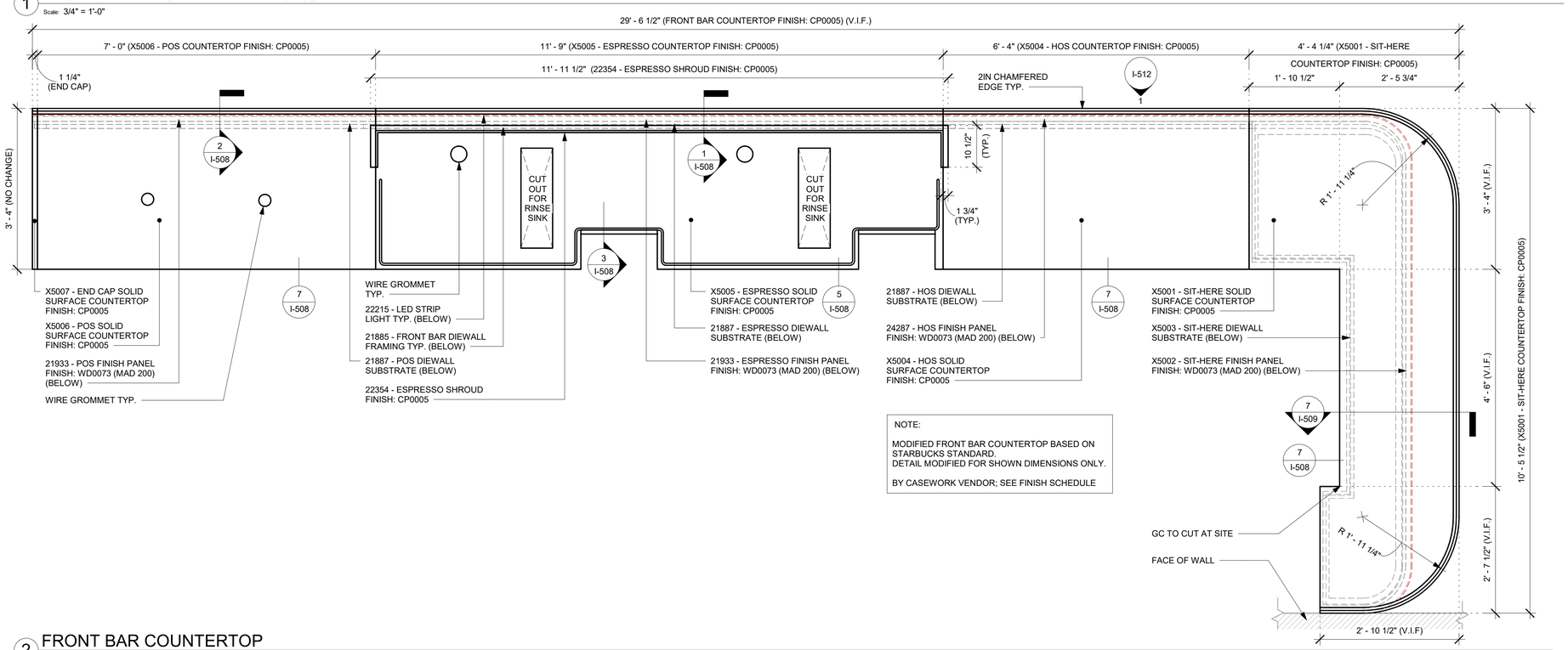

2 FRONT BAR COUNTERTOP

Scale: 3/4" = 1'-0"

NOTE:
SHOP DRAWINGS TO BE APPROVED BY SB DESIGNER PRIOR TO FABRICATION.

FOR CONSTRUCTION

© 2019 STARBUCKS COFFEE COMPANY

STARBUCKS®
2401 UTAH AVENUE SOUTH
SEATTLE, WASHINGTON 98134
(206) 318-1575

THESE DRAWINGS AND THE PROJECT MANUAL ARE CONFIDENTIAL AND SHALL REMAIN THE SOLE PROPERTY OF STARBUCKS CORPORATION, WHICH IS THE OWNER OF THE COPYRIGHT IN THIS WORK. THEY SHALL NOT BE REPRODUCED (IN WHOLE OR IN PART), SHARED WITH THIRD PARTIES OR USED IN ANY MANNER ON OTHER PROJECTS OR EXTENSIONS TO THIS PROJECT WITHOUT THE PRIOR WRITTEN CONSENT OF STARBUCKS CORPORATION. THESE DRAWINGS AND SPECIFICATIONS ARE INTENDED TO EXPRESS DESIGN INTENT FOR A PROTOTYPICAL STARBUCKS STORE (WHICH IS SUBJECT TO CHANGE AT ANYTIME) AND DO NOT REFLECT ACTUAL SITE CONDITIONS. NEITHER PARTY SHALL HAVE ANY OBLIGATION NOR LIABILITY TO THE OTHER (EXCEPT STATED ABOVE) UNTIL A WRITTEN AGREEMENT IS FULLY EXECUTED BY BOTH PARTIES.

STARBUCKS TEMPLATE VERSION: i2021-09-13

Design Forum Architects Inc.
2056 Byers Rd
Miamisburg, OH 45342
Tel: (844) 804-7700
Donald J. Rethman
Architect In Charge
License: AR0017303

Design Forum Engineering
2056 Byers Rd
Miamisburg, OH 45342
Tel: (844) 804-7700
Timothy L. Raberding, PE
Professional Engineer
License: 62078

PROJECT NAME:
US 98 & GRIFFIN RD

PROJECT ADDRESS:
3105 US-98 NORTH
LAKELAND, FLORIDA 33801

STORE #:	80004
PROJECT #:	96892-001
ISSUE DATE:	2025-10-10
DESIGNER:	ASHLEY SUEIRAS
PRODUCTION DESIGNER:	ANDY MCLOUD
CHECKED BY:	DONALD RETHMAN

Revision Schedule

Rev	Date	By	Description
2	08/26/25		REV-2

SHEET TITLE:
INTERIOR DETAILS

SCALE: 3/4" = 1'-0"

SHEET NUMBER:
I-507

10/9/2025 9:55:17 AM C:\Users\julia.gray\Documents\96892-001_80004_US 98 & Griffin Rd, FL_2025_Julia.gravFRYY6.rvt

NOTE:
SHOP DRAWINGS TO BE APPROVED BY SB DESIGNER PRIOR TO FABRICATION.

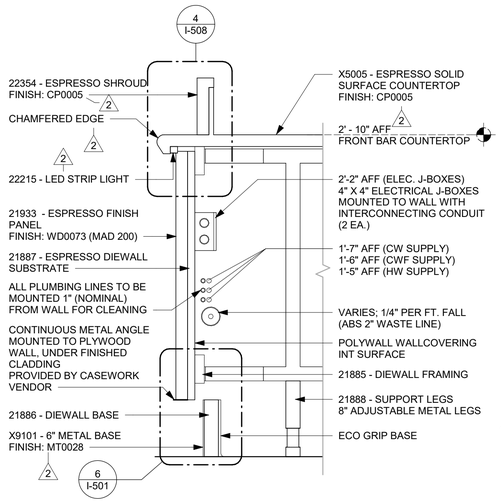

1 DIEWALL ASSEMBLY AT ESPRESSO
Scale: 1 1/2" = 1'-0"

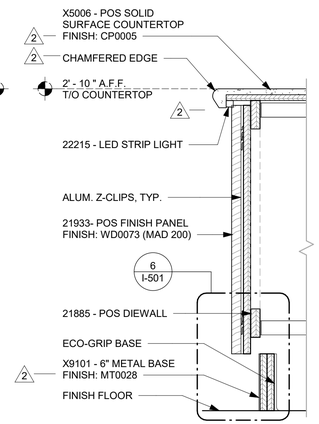

2 DIEWALL SECTION AT POS
Scale: 1 1/2" = 1'-0"

NOTES:
1. LOCATE PUMP WITHIN CORD LENGTH LIMIT. ORIENT WITH PUMP HEAD LEFT, RIGHT AND AT BOTTOM. LOOSEN PUMP HEAD CLAMP, ROTATE AND RE-TIGHTEN AS REQUIRED PER ORIENTATION TO PROVIDE FRONT ACCESS TO FLOW. ADJUSTMENT WITHIN CORD LENGTH LIMIT.
2. USE LOCKTITE ON ISOLATOR THREADS. DO NOT OVER TIGHTEN.
3. LOOSEN PUMP HEAD CLAMP, ROTATE AND RE-TIGHTEN AS REQUIRED FOR PUMP ORIENTATION.
4. EACH BACKER BOARD'S ASSEMBLY COMPONENTS INCLUDE:
   (1) BACKER BOARDS
   (4) TENETS, 1/4-20 VENDOR MOUNTED
   (8) WOOD SCREWS #8 1-1/4" (32MM)
   (4) NEOPRENE ISOLATORS, KARMAN RUBBER, K84-60 NEOPRENE
   (4) LOCK NUTS, 1/4-20 NYLON
   (4) WASHERS, 1/4" (7MM) FLAT

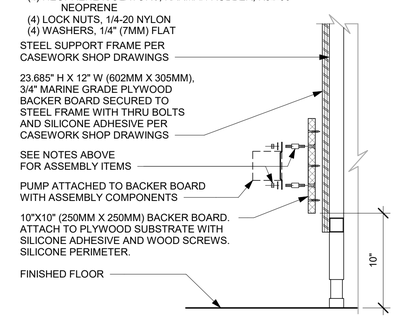

3 ESPRESSO PUMP MOUNTED AT CABINET
Scale: 1 1/2" = 1'-0"

NOTE:
ALL COMPONENTS FURNISHED BY OTHERS AND INSTALLED BY G.C. UNLESS NOTED OTHERWISE.

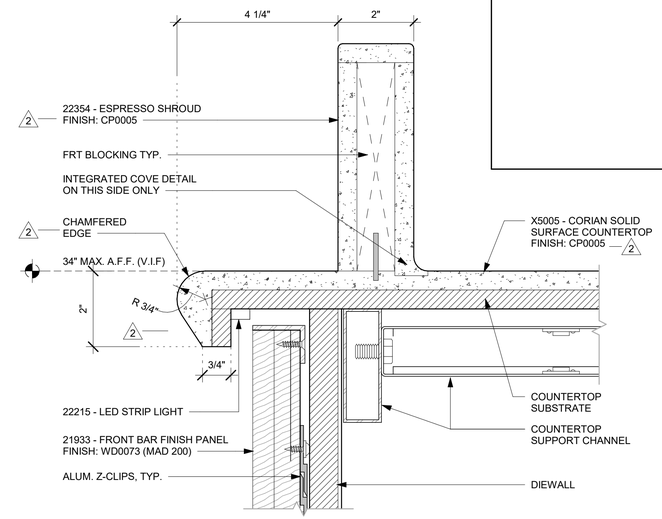

4 ESPRESSO SHROUD DETAIL
Scale: 6" = 1'-0"

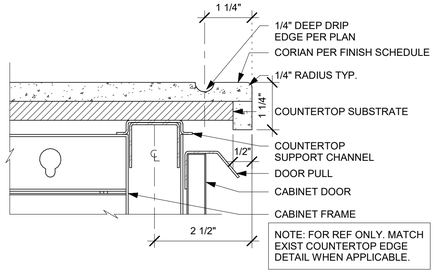

5 TYP. CORIAN DRIP EDGE - FRONTLINE
Scale: 6" = 1'-0"

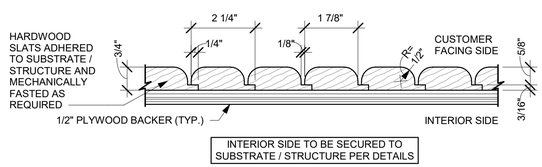

A ENLARGED SECTION PROFILE
NOT TO SCALE

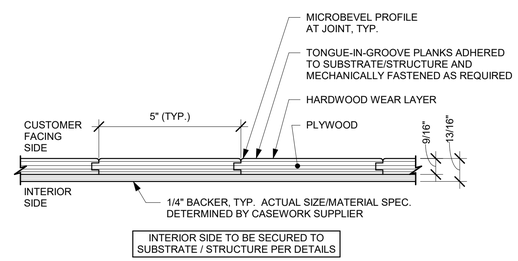

A ENLARGED SECTION PROFILE
NOT TO SCALE

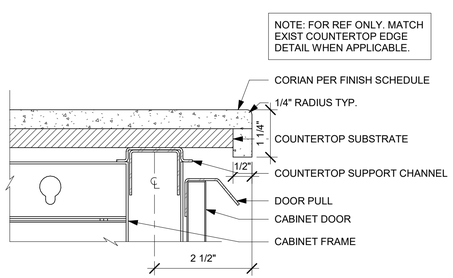

7 TYP. CORIAN EDGE - FRONTLINE
Scale: 6" = 1'-0"

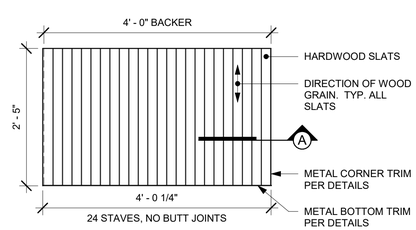

ELEVATION

8 FINISH APPLICATION (MAD 200-V) ROUNDED SLAT W/ REVEAL

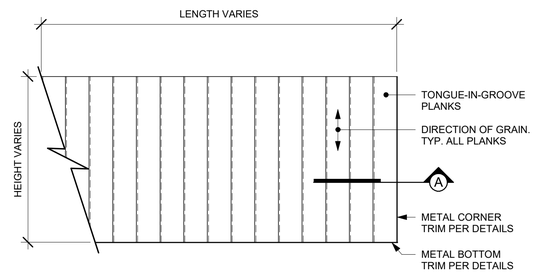

ELEVATION

9 FINISH APPLICATION (MAD 100-V) FIXED WIDTH WIDE PLANK
Scale: 3/4" = 1'-0"

FOR CONSTRUCTION

© 2019 STARBUCKS COFFEE COMPANY

STARBUCKS®
2401 UTAH AVENUE SOUTH
SEATTLE, WASHINGTON 98134
(206) 318-1575

THESE DRAWINGS AND THE PROJECT MANUAL ARE CONFIDENTIAL AND SHALL REMAIN THE SOLE PROPERTY OF STARBUCKS CORPORATION, WHICH IS THE OWNER OF THE COPYRIGHT IN THIS WORK. THEY SHALL NOT BE REPRODUCED (IN WHOLE OR IN PART), SHARED WITH THIRD PARTIES OR USED IN ANY MANNER ON OTHER PROJECTS OR EXTENSIONS TO THIS PROJECT WITHOUT THE PRIOR WRITTEN CONSENT OF STARBUCKS CORPORATION. THESE DRAWINGS AND SPECIFICATIONS ARE INTENDED TO EXPRESS DESIGN INTENT FOR A PROTOTYPICAL STARBUCKS STORE (WHICH IS SUBJECT TO CHANGE AT ANYTIME) AND DO NOT REFLECT ACTUAL SITE CONDITIONS. NEITHER PARTY SHALL HAVE ANY OBLIGATION NOR LIABILITY TO THE OTHER (EXCEPT STATED ABOVE) UNTIL A WRITTEN AGREEMENT IS FULLY EXECUTED BY BOTH PARTIES.

STARBUCKS TEMPLATE VERSION: i2021-09-13

Design Forum Architects Inc.
2056 Byers Rd
Miamisburg, OH 45342
Tel: (844) 804-7700
Donald J. Rethman
Architect In Charge
License: AR0017303

Design Forum Engineering
2056 Byers Rd
Miamisburg, OH 45342
Tel: (844) 804-7700
Timothy L. Raberding, PE
Professional Engineer
License: 62078

PROJECT NAME:
US 98 & GRIFFIN RD

PROJECT ADDRESS:
3105 US-98 NORTH
LAKELAND, FLORIDA 33801

STORE #:	80004
PROJECT #:	96892-001
ISSUE DATE:	2025-10-10
DESIGNER:	ASHLEY SUEIRAS
PRODUCTION DESIGNER:	ANDY MCLOUD
CHECKED BY:	DONALD RETHMAN

Revision Schedule

Rev	Date	By	Description
2	08/26/25		REV-2

SHEET TITLE:
INTERIOR DETAILS

SCALE: AS SHOWN

SHEET NUMBER:
I-508

10/9/2025 9:55:18 AM C:\Users\julia.gray\Documents\96892-001_80004_US 98 & Griffin Rd, FL_2025_Julia.gray\FRYY6.rvt

NOTE:
SHOP DRAWINGS TO BE APPROVED BY SB DESIGNER PRIOR TO FABRICATION.

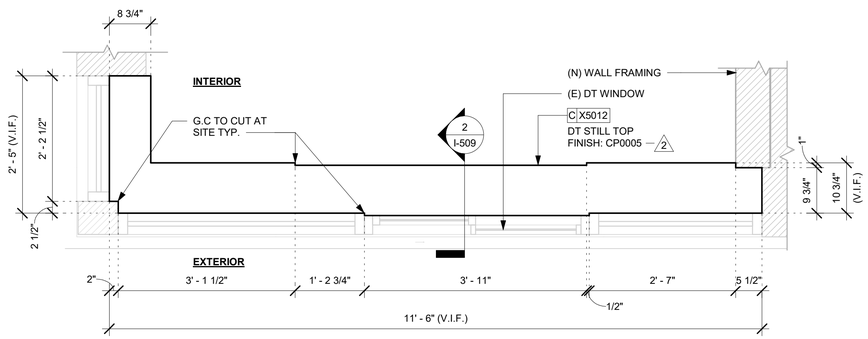

1 X5012 - DT SILL TOP - PLAN
Scale: 3/4" = 1'-0"

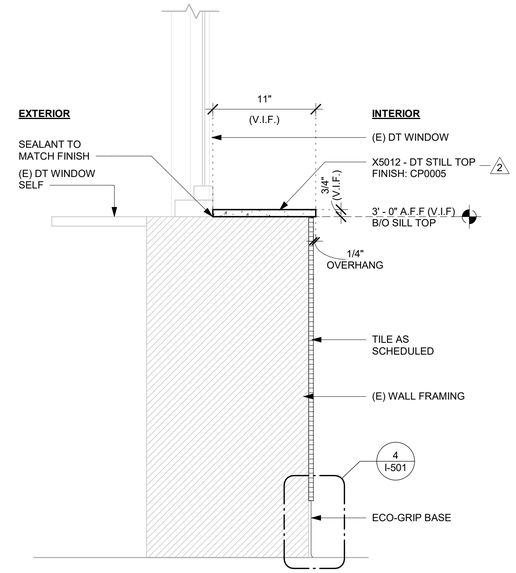

2 X5012 - DT SILL TOP - SECTION
Scale: 1 1/2" = 1'-0"

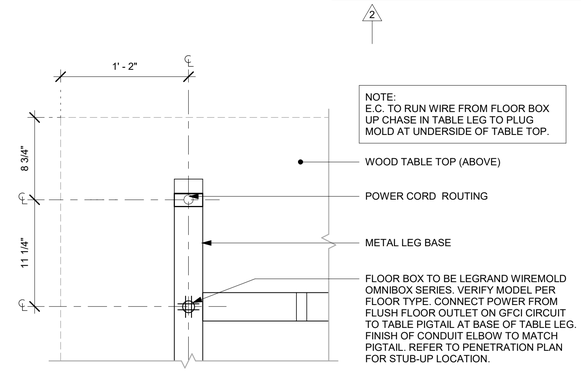

3 COMMUNITY TABLE LEG BASE PLAN
Scale: 1 1/2" = 1'-0"

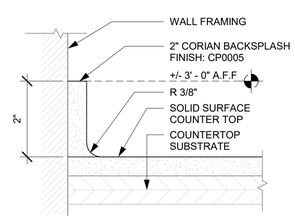

5 2" BACKSPLASH DETAIL AT DT
Scale: 6" = 1'-0"

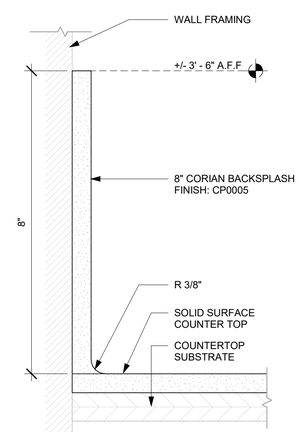

6 8" BACKSPLASH DETAIL
Scale: 6" = 1'-0"

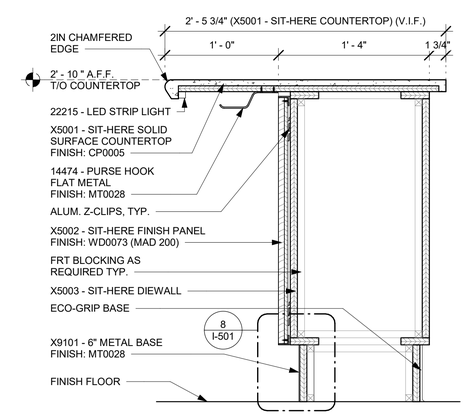

7 DIEWALL SECTION AT SIT-HERE COUNTER
Scale: 1 1/2" = 1'-0"

FOR CONSTRUCTION

© 2019 STARBUCKS COFFEE COMPANY

STARBUCKS®
2401 UTAH AVENUE SOUTH
SEATTLE, WASHINGTON 98134
(206) 318-1575

THESE DRAWINGS AND THE PROJECT MANUAL ARE CONFIDENTIAL AND SHALL REMAIN THE SOLE PROPERTY OF STARBUCKS CORPORATION, WHICH IS THE OWNER OF THE COPYRIGHT IN THIS WORK. THEY SHALL NOT BE REPRODUCED (IN WHOLE OR IN PART), SHARED WITH THIRD PARTIES OR USED IN ANY MANNER ON OTHER PROJECTS OR EXTENSIONS TO THIS PROJECT WITHOUT THE PRIOR WRITTEN CONSENT OF STARBUCKS CORPORATION. THESE DRAWINGS AND SPECIFICATIONS ARE INTENDED TO EXPRESS DESIGN INTENT FOR A PROTOTYPICAL STARBUCKS STORE (WHICH IS SUBJECT TO CHANGE AT ANYTIME) AND DO NOT REFLECT ACTUAL SITE CONDITIONS. NEITHER PARTY SHALL HAVE ANY OBLIGATION NOR LIABILITY TO THE OTHER (EXCEPT STATED ABOVE) UNTIL A WRITTEN AGREEMENT IS FULLY EXECUTED BY BOTH PARTIES.

STARBUCKS TEMPLATE VERSION: i2021-09-13

Design Forum Architects Inc.
2056 Byers Rd
Miamisburg, OH 45342
Tel: (844) 804-7700
Donald J. Rethman
Architect In Charge
License: AR0017303

Design Forum Engineering
2056 Byers Rd
Miamisburg, OH 45342
Tel: (844) 804-7700
Timothy L. Raberding, PE
Professional Engineer
License: 62078

PROJECT NAME:
US 98 & GRIFFIN RD

PROJECT ADDRESS:
3105 US-98 NORTH
LAKELAND, FLORIDA 33801

STORE #:	80004
PROJECT #:	96892-001
ISSUE DATE:	2025-10-10
DESIGNER:	ASHLEY SUEIRAS
PRODUCTION DESIGNER:	ANDY MCLOUD
CHECKED BY:	DONALD RETHMAN

Revision Schedule

Rev	Date	By	Description
2	08/26/25		REV-2

SHEET TITLE:
INTERIOR DETAILS

SCALE: AS SHOWN

SHEET NUMBER:
I-509

10/9/2025 9:55:19 AM C:\Users\julia.gray\Documents\96892-001_80004_US 98 & Griffin Rd, FL_2025_Julia.grayFRYY6.rvt

NOTE:
SHOP DRAWINGS TO BE APPROVED BY SB DESIGNER PRIOR TO FABRICATION.

2

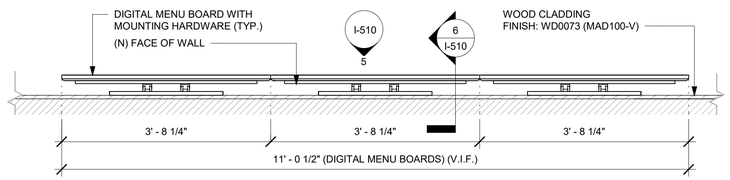

4 DIGITAL MENU BOARD - PLAN

Scale: 3/4" = 1'-0"

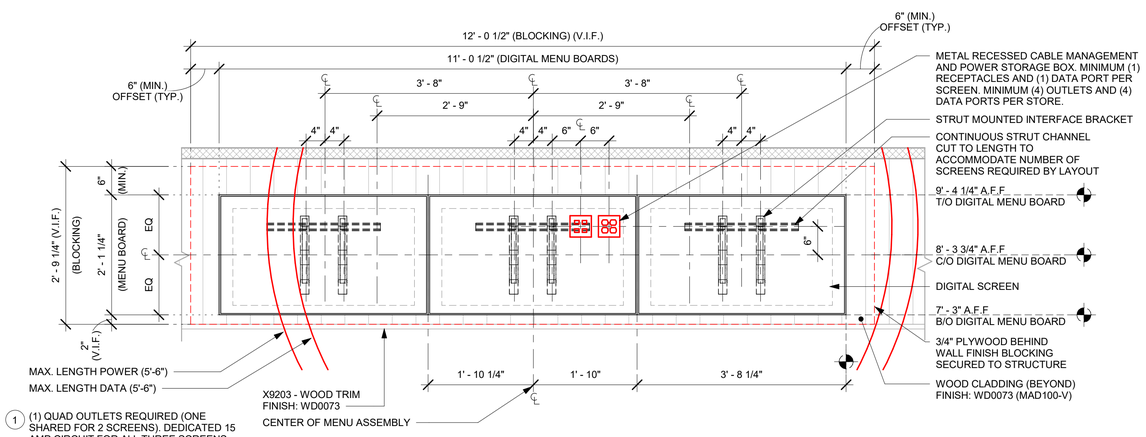

1 (1) QUAD OUTLETS REQUIRED (ONE SHARED FOR 2 SCREENS). DEDICATED 15 AMP CIRCUIT FOR ALL THREE SCREENS.

2 (1) DUAL DATA PORTS (ONE SHARED WITH 2 DMB). ETHERNET CONNECTION TO RUN TO BOH EQUIPMENT RACK.

3 3/4" PLYWOOD BEHIND WALL FINISH BLOCKING SECURED TO STRUCTURE TO EXTEND. 6IN FROM ALL SIDE

DESIGNER/ CONSULTANT TO ADAPT DETAIL BASED ON STORE SPECIFIC MENU BOARD EQUIPMENT PER SDRC GUIDELINES FOR DIGITAL MENU BOARDS.

5 DIGITAL MENU BOARD - ELEVATION

Scale: 3/4" = 1'-0"

2

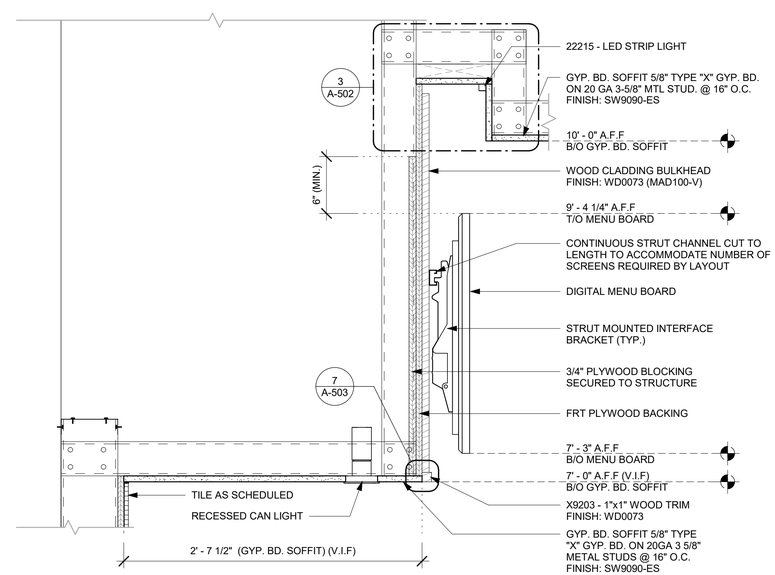

6 DIGITAL MENU BOARD - SECTION

Scale: 1 1/2" = 1'-0"

FOR CONSTRUCTION

© 2019 STARBUCKS COFFEE COMPANY

STARBUCKS®
2401 UTAH AVENUE SOUTH
SEATTLE, WASHINGTON 98134
(206) 318-1575

THESE DRAWINGS AND THE PROJECT MANUAL ARE CONFIDENTIAL AND SHALL REMAIN THE SOLE PROPERTY OF STARBUCKS CORPORATION, WHICH IS THE OWNER OF THE COPYRIGHT IN THIS WORK. THEY SHALL NOT BE REPRODUCED (IN WHOLE OR IN PART), SHARED WITH THIRD PARTIES OR USED IN ANY MANNER ON OTHER PROJECTS OR EXTENSIONS TO THIS PROJECT WITHOUT THE PRIOR WRITTEN CONSENT OF STARBUCKS CORPORATION. THESE DRAWINGS AND SPECIFICATIONS ARE INTENDED TO EXPRESS DESIGN INTENT FOR A PROTOTYPICAL STARBUCKS STORE (WHICH IS SUBJECT TO CHANGE AT ANYTIME) AND DO NOT REFLECT ACTUAL SITE CONDITIONS. NEITHER PARTY SHALL HAVE ANY OBLIGATION NOR LIABILITY TO THE OTHER (EXCEPT STATED ABOVE) UNTIL A WRITTEN AGREEMENT IS FULLY EXECUTED BY BOTH PARTIES.

STARBUCKS TEMPLATE VERSION: i2021-09-13

Design Forum Architects Inc.
2056 Byers Rd
Miamisburg, OH 45342
Tel: (844) 804-7700
Donald J. Rethman
Architect In Charge
License: AR0017303

Design Forum Engineering
2056 Byers Rd
Miamisburg, OH 45342
Tel: (844) 804-7700
Timothy L. Raberding, PE
Professional Engineer
License: 62078

PROJECT NAME:
US 98 & GRIFFIN RD

PROJECT ADDRESS:
3105 US-98 NORTH
LAKELAND, FLORIDA 33801

STORE #:	80004
PROJECT #:	96892-001
ISSUE DATE:	2025-10-10
DESIGNER:	ASHLEY SUEIRAS
PRODUCTION DESIGNER:	ANDY MCLOUD
CHECKED BY:	DONALD RETHMAN

Revision Schedule

Rev	Date	By	Description
2	08/26/25		REV-2

SHEET TITLE:
INTERIOR DETAILS

SCALE: AS SHOWN

SHEET NUMBER:
I-510

10/9/2025 9:55:20 AM C:\Users\julia.gray\Documents\96892-001_80004_US 98 & Griffin Rd, FL_2025_Julia.gray\FRYY6.rvt

NOTE:
SHOP DRAWINGS TO BE APPROVED BY SB DESIGNER PRIOR TO FABRICATION.

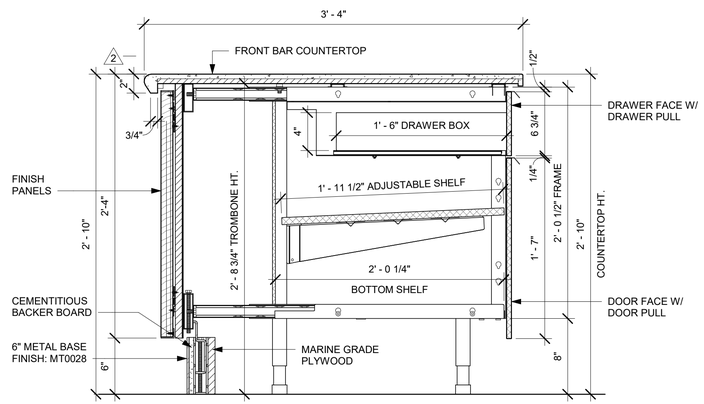

1 AC FRONT BAR DRAWER CABINET ASSEMBLY ON LEGS SECTION

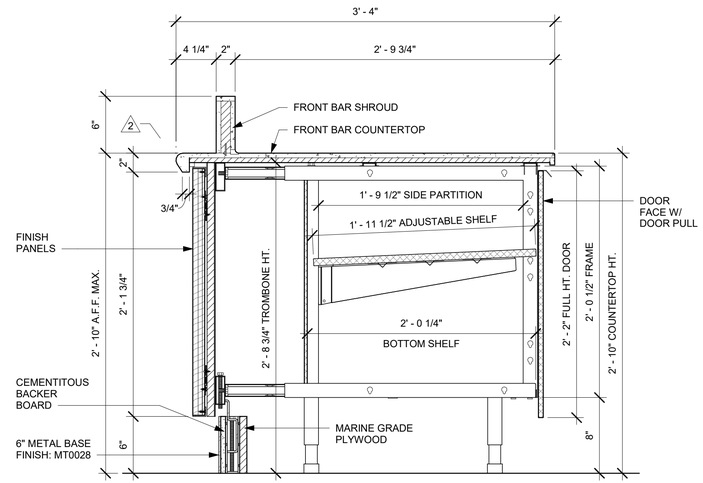

2 AC FRONT BAR CABINET ASSEMBLY ON LEGS SECTION

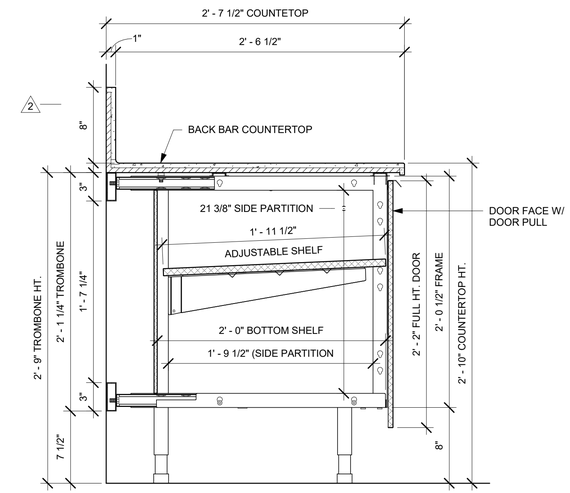

3 AC BACK BAR CABINET ASSEMBLY ON LEGS SECTION

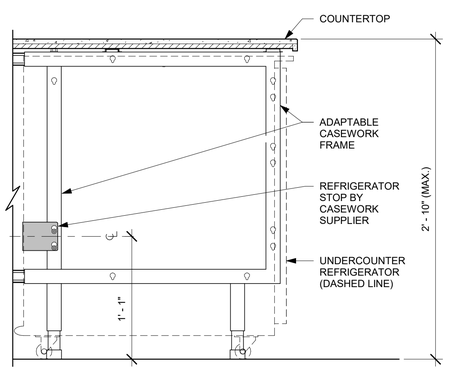

4 AC UNDERCOUNTER REFRIGERATOR SECTION
Scale: 1 1/2" = 1'-0"

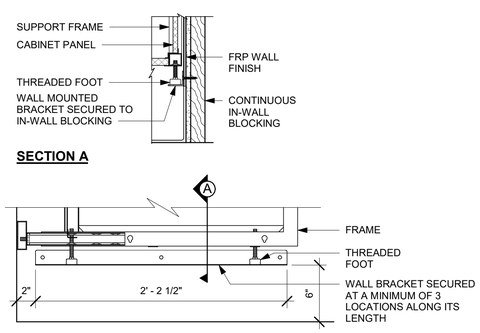

5 AC BACKLINE WALL BRACKET ASSEMBLY
Scale: 1 1/2" = 1'-0"

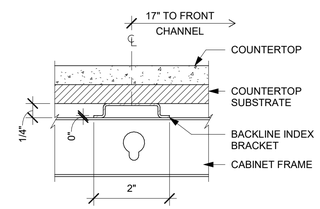

6 AC COUNTERTOP SUPPORT CHANNEL
Scale: 6" = 1'-0"

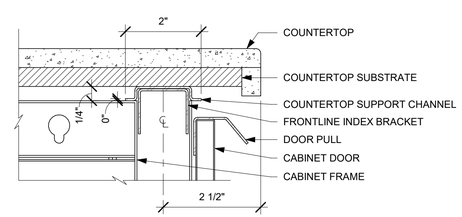

7 AC COUNTERTOP FRONT HAT SUPPORT CHANNEL
Scale: 6" = 1'-0"

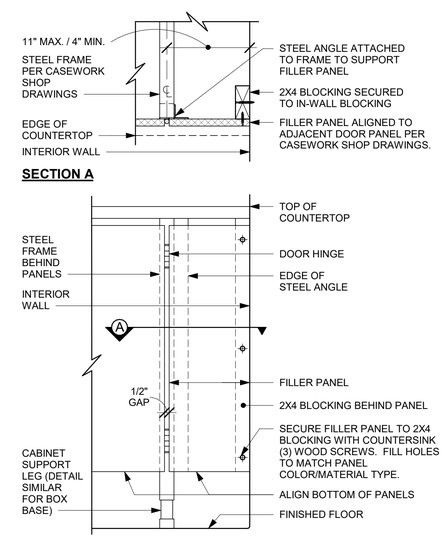

8 FILLER PANEL AT WALL
Scale: 1 1/2" = 1'-0"

FOR CONSTRUCTION

© 2019 STARBUCKS COFFEE COMPANY

STARBUCKS®
2401 UTAH AVENUE SOUTH
SEATTLE, WASHINGTON 98134
(206) 318-1575

THESE DRAWINGS AND THE PROJECT MANUAL ARE CONFIDENTIAL AND SHALL REMAIN THE SOLE PROPERTY OF STARBUCKS CORPORATION, WHICH IS THE OWNER OF THE COPYRIGHT IN THIS WORK. THEY SHALL NOT BE REPRODUCED (IN WHOLE OR IN PART), SHARED WITH THIRD PARTIES OR USED IN ANY MANNER ON OTHER PROJECTS OR EXTENSIONS TO THIS PROJECT WITHOUT THE PRIOR WRITTEN CONSENT OF STARBUCKS CORPORATION. THESE DRAWINGS AND SPECIFICATIONS ARE INTENDED TO EXPRESS DESIGN INTENT FOR A PROTOTYPICAL STARBUCKS STORE (WHICH IS SUBJECT TO CHANGE AT ANYTIME) AND DO NOT REFLECT ACTUAL SITE CONDITIONS. NEITHER PARTY SHALL HAVE ANY OBLIGATION NOR LIABILITY TO THE OTHER (EXCEPT STATED ABOVE) UNTIL A WRITTEN AGREEMENT IS FULLY EXECUTED BY BOTH PARTIES.

STARBUCKS TEMPLATE VERSION: i2021-09-13

Design Forum Architects Inc.
2056 Byers Rd
Miamisburg, OH 45342
Tel: (844) 804-7700
Donald J. Rethman
Architect In Charge
License: AR0017303

Design Forum Engineering
2056 Byers Rd
Miamisburg, OH 45342
Tel: (844) 804-7700
Timothy L. Raberding, PE
Professional Engineer
License: 62078

PROJECT NAME:
US 98 & GRIFFIN RD

PROJECT ADDRESS:
3105 US-98 NORTH
LAKELAND, FLORIDA 33801

STORE #:	80004
PROJECT #:	96892-001
ISSUE DATE:	2025-10-10
DESIGNER:	ASHLEY SUEIRAS
PRODUCTION DESIGNER:	ANDY MCLOUD
CHECKED BY:	DONALD RETHMAN

Revision Schedule

Rev	Date	By	Description
2	08/26/25		REV-2

SHEET TITLE:
INTERIOR DETAILS

SCALE: AS SHOWN

SHEET NUMBER:
I-511

10/9/2025 9:55:21 AM C:\Users\julia.gray\Documents\96892-001_80004_US 98 & Griffin Rd, FL_2025_Julia.grayFRYY6.rvt

NOTE:
SHOP DRAWINGS TO BE APPROVED BY
SB DESIGNER PRIOR TO FABRICATION.

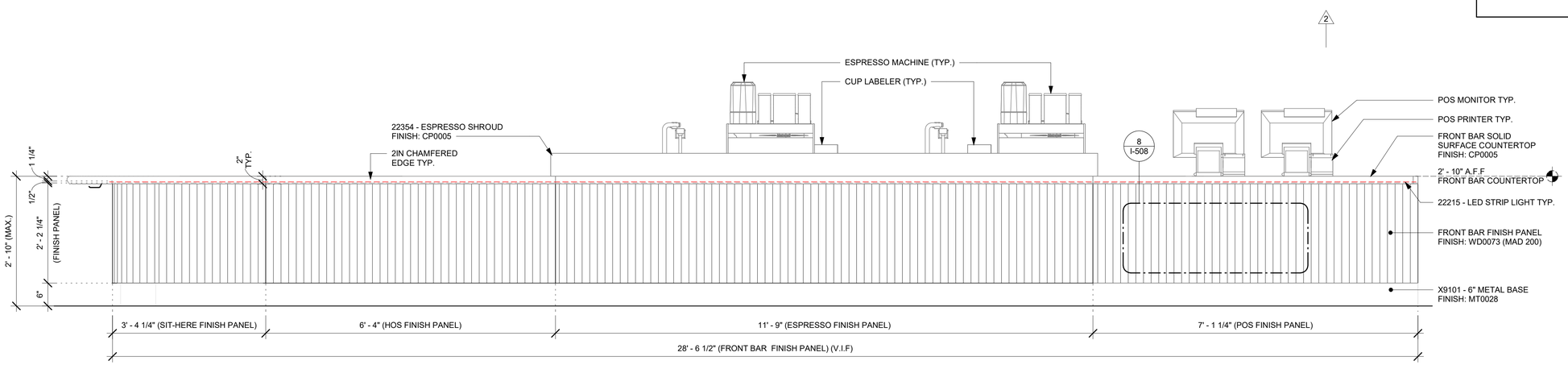

1 FRONT BAR FINISH PANEL - ELEVATION
Scale: 3/4" = 1'-0"

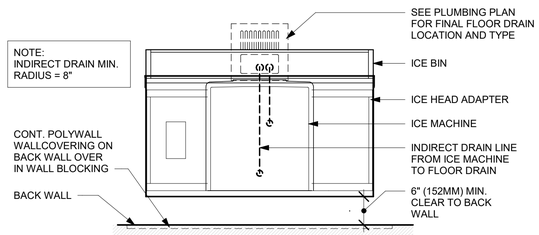

PLAN - PLUMBING DIAGRAM

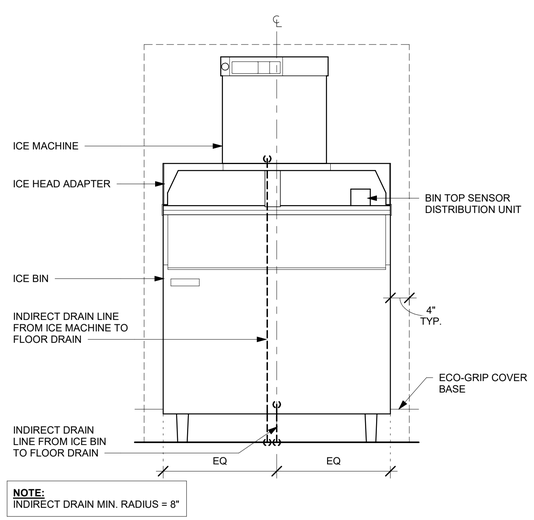

ELEVATION - PLUMBING DIAGRAM

2 ICE BIN - PLUMBING FOR REFRENCE ONLY
Scale: 3/4" = 1'-0"

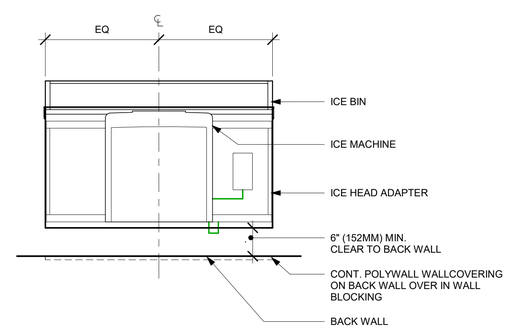

PLAN - ELECTRICAL DIAGRAM

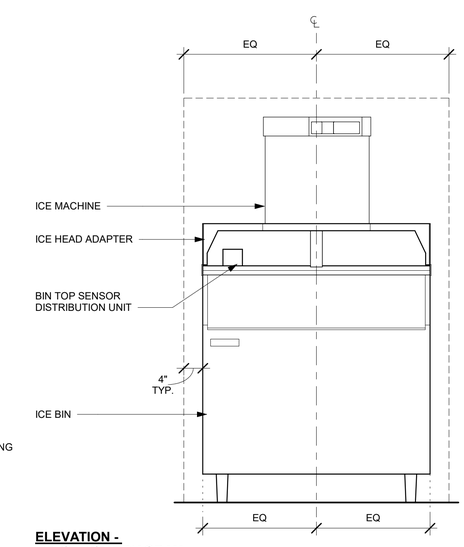

ELEVATION - ELECTRICAL DIAGRAM

3 ICE BIN - ELECTRICAL FOR REFERENCE ONLY
Scale: 3/4" = 1'-0"

FOR CONSTRUCTION

© 2019 STARBUCKS COFFEE COMPANY

STARBUCKS®
2401 UTAH AVENUE SOUTH
SEATTLE, WASHINGTON 98134
(206) 318-1575

THESE DRAWINGS AND THE PROJECT MANUAL ARE CONFIDENTIAL AND SHALL REMAIN THE SOLE PROPERTY OF STARBUCKS CORPORATION, WHICH IS THE OWNER OF THE COPYRIGHT IN THIS WORK. THEY SHALL NOT BE REPRODUCED (IN WHOLE OR IN PART), SHARED WITH THIRD PARTIES OR USED IN ANY MANNER ON OTHER PROJECTS OR EXTENSIONS TO THIS PROJECT WITHOUT THE PRIOR WRITTEN CONSENT OF STARBUCKS CORPORATION. THESE DRAWINGS AND SPECIFICATIONS ARE INTENDED TO EXPRESS DESIGN INTENT FOR A PROTOTYPICAL STARBUCKS STORE (WHICH IS SUBJECT TO CHANGE AT ANYTIME) AND DO NOT REFLECT ACTUAL SITE CONDITIONS. NEITHER PARTY SHALL HAVE ANY OBLIGATION NOR LIABILITY TO THE OTHER (EXCEPT STATED ABOVE) UNTIL A WRITTEN AGREEMENT IS FULLY EXECUTED BY BOTH PARTIES.

STARBUCKS TEMPLATE VERSION: i2021-09-13

Design Forum Architects Inc.
2056 Byers Rd
Miamisburg, OH 45342
Tel: (844) 804-7700
Donald J. Rethman
Architect In Charge
License: AR0017303

Design Forum Engineering
2056 Byers Rd
Miamisburg, OH 45342
Tel: (844) 804-7700
Timothy L. Raberding, PE
Professional Engineer
License: 62078

PROJECT NAME:
US 98 & GRIFFIN RD

PROJECT ADDRESS:
3105 US-98 NORTH
LAKELAND, FLORIDA 33801

STORE #:	80004
PROJECT #:	96892-001
ISSUE DATE:	2025-10-10
DESIGNER:	ASHLEY SUEIRAS
PRODUCTION DESIGNER:	ANDY MCLOUD
CHECKED BY:	DONALD RETHMAN

Revision Schedule

Rev	Date	By	Description
2	08/26/25		REV-2

SHEET TITLE:
INTERIOR DETAILS

SCALE: AS SHOWN

SHEET NUMBER:
I-512

10/9/2025 9:55:22 AM C:\Users\julia.gray\Documents\96892-001_80004_US 98 & Griffin Rd, FL_2025_Julia.grayFRYY6.rvt

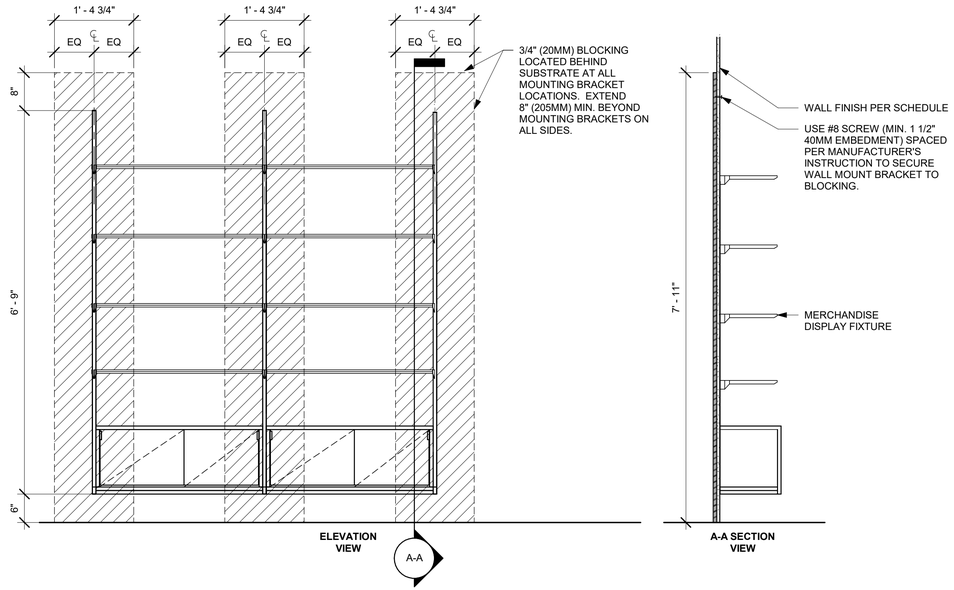

1 MERCHANDISE WALL BAY DISPLAY FIXTURE WALL ATTACHMENT

Scale: 3/4" = 1'-0"

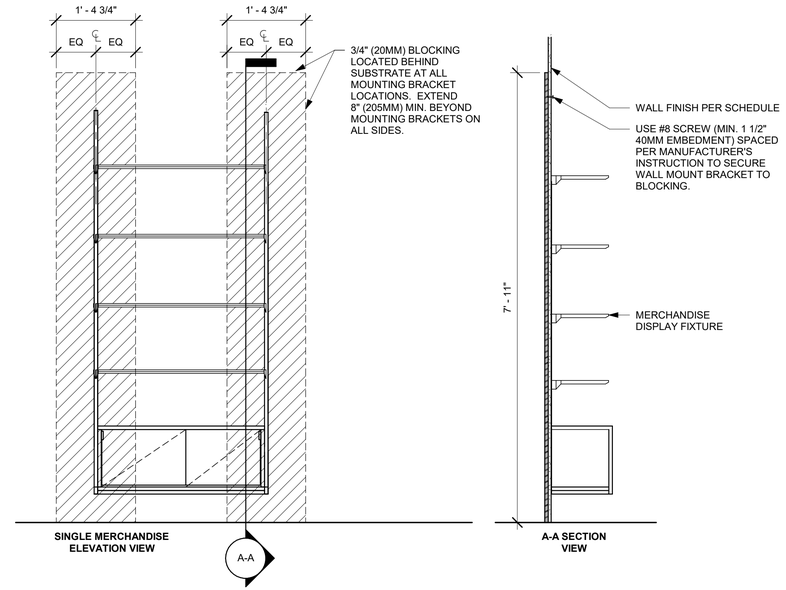

2 MERCHANDISE WALL BAY DISPLAY FIXTURE WALL ATTACHMENT

Scale: 3/4" = 1'-0"

NOTE:
SHOP DRAWINGS TO BE APPROVED BY SB DESIGNER PRIOR TO FABRICATION.

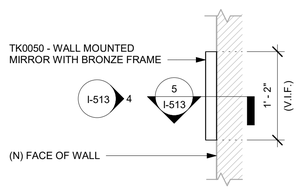

3 TK0050 - MIRROR - PLAN

Scale: 1" = 1'-0"

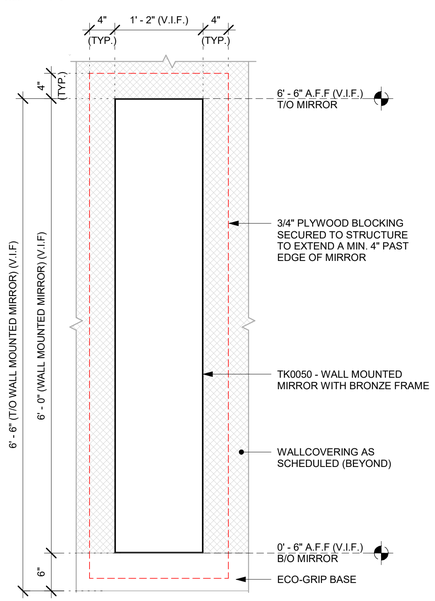

4 TK0050 - MIRROR - ELEVATION

Scale: 1" = 1'-0"

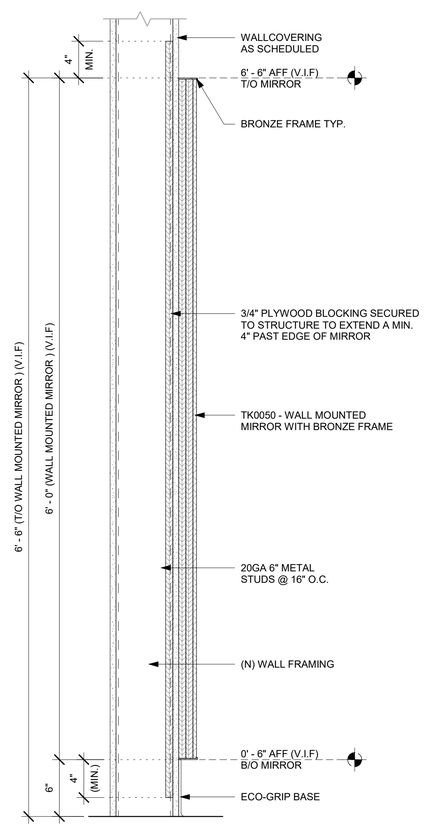

5 TK0050 - MIRROR - SECTION

Scale: 1 1/2" = 1'-0"

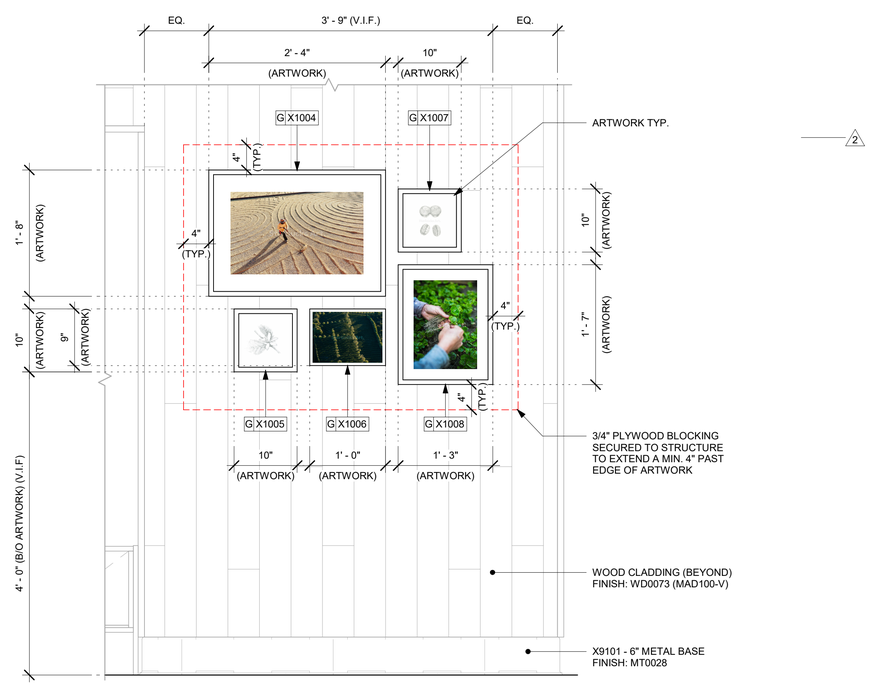

6 ARTWORK - ELEVATION

Scale: 1" = 1'-0"

FOR CONSTRUCTION

© 2019 STARBUCKS COFFEE COMPANY

STARBUCKS®
2401 UTAH AVENUE SOUTH
SEATTLE, WASHINGTON 98134
(206) 318-1575

THESE DRAWINGS AND THE PROJECT MANUAL ARE CONFIDENTIAL AND SHALL REMAIN THE SOLE PROPERTY OF STARBUCKS CORPORATION, WHICH IS THE OWNER OF THE COPYRIGHT IN THIS WORK. THEY SHALL NOT BE REPRODUCED (IN WHOLE OR IN PART), SHARED WITH THIRD PARTIES OR USED IN ANY MANNER ON OTHER PROJECTS OR EXTENSIONS TO THIS PROJECT WITHOUT THE PRIOR WRITTEN CONSENT OF STARBUCKS CORPORATION. THESE DRAWINGS AND SPECIFICATIONS ARE INTENDED TO EXPRESS DESIGN INTENT FOR A PROTOTYPICAL STARBUCKS STORE (WHICH IS SUBJECT TO CHANGE AT ANYTIME) AND DO NOT REFLECT ACTUAL SITE CONDITIONS. NEITHER PARTY SHALL HAVE ANY OBLIGATION NOR LIABILITY TO THE OTHER (EXCEPT STATED ABOVE) UNTIL A WRITTEN AGREEMENT IS FULLY EXECUTED BY BOTH PARTIES.

STARBUCKS TEMPLATE VERSION: i2021-09-13

Design Forum Architects Inc.
2056 Byers Rd
Miamisburg, OH 45342
Tel: (844) 804-7700
Donald J. Rethman
Architect In Charge
License: AR0017303

Design Forum Engineering
2056 Byers Rd
Miamisburg, OH 45342
Tel: (844) 804-7700
Timothy L. Raberding, PE
Professional Engineer
License: 62078

PROJECT NAME:
US 98 & GRIFFIN RD

PROJECT ADDRESS:
3105 US-98 NORTH
LAKELAND, FLORIDA 33801

STORE #:	80004
PROJECT #:	96892-001
ISSUE DATE:	2025-10-10
DESIGNER:	ASHLEY SUEIRAS
PRODUCTION DESIGNER:	ANDY MCLOUD
CHECKED BY:	DONALD RETHMAN

Revision Schedule

Rev	Date	By	Description
2	08/26/25		REV-2

SHEET TITLE:
INTERIOR DETAILS

SCALE: AS SHOWN

SHEET NUMBER:
I-513

10/9/2025 9:55:23 AM C:\Users\julia.gray\Documents\96892-001_80004_US 98 & Griffin Rd, FL_2025_Julia.grayFRYY6.rvt

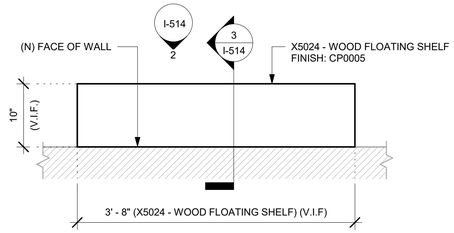

1 X5024 - BACKBAR WOOD SHELVES - PLAN

Scale: 1" = 1'-0"

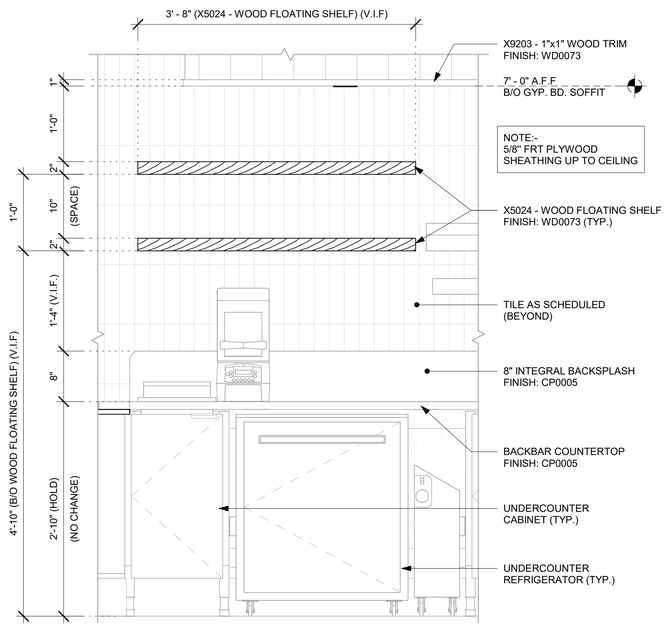

2 X5024 - BACKBAR WOOD SHELVES - ELEVATION

Scale: 1" = 1'-0"

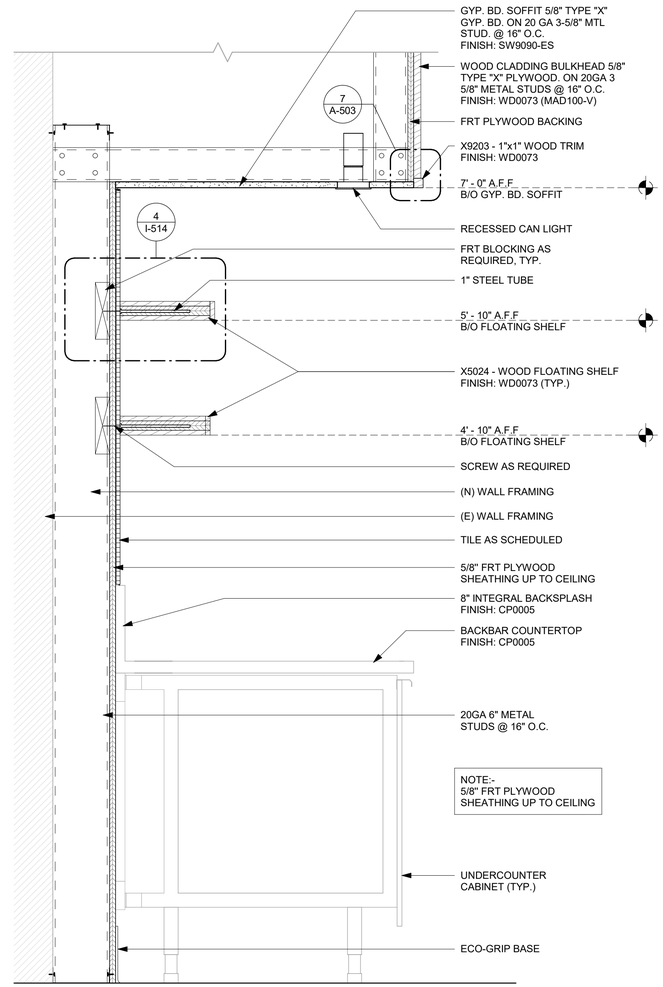

3 X5024 - BACKBAR WOOD SHELVES - SECTION

Scale: 1 1/2" = 1'-0"

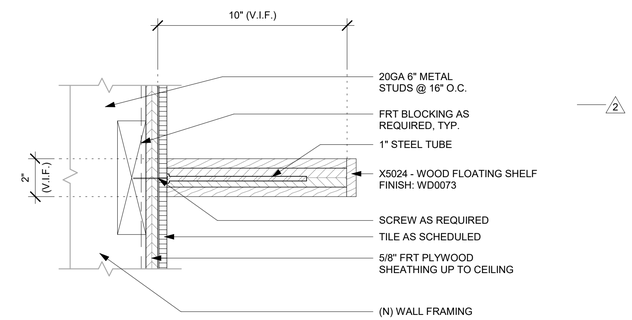

4 ENLARGED WOOD SHELF FIXING DETAIL

Scale: 3" = 1'-0"

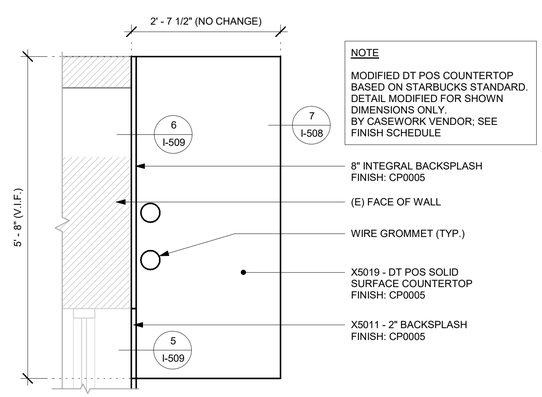

5 X5019 - DT POS COUNTERTOP - PLAN

Scale: 3/4" = 1'-0"

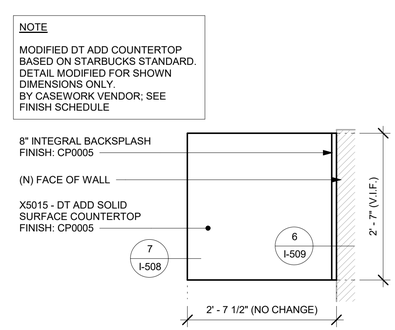

6 X5015 - DT ADD COUNTERTOP - PLAN

Scale: 3/4" = 1'-0"

NOTE:
SHOP DRAWINGS TO BE APPROVED BY SB DESIGNER PRIOR TO FABRICATION.

FOR CONSTRUCTION

© 2019 STARBUCKS COFFEE COMPANY

STARBUCKS®
2401 UTAH AVENUE SOUTH
SEATTLE, WASHINGTON 98134
(206) 318-1575

THESE DRAWINGS AND THE PROJECT MANUAL ARE CONFIDENTIAL AND SHALL REMAIN THE SOLE PROPERTY OF STARBUCKS CORPORATION, WHICH IS THE OWNER OF THE COPYRIGHT IN THIS WORK. THEY SHALL NOT BE REPRODUCED (IN WHOLE OR IN PART), SHARED WITH THIRD PARTIES OR USED IN ANY MANNER ON OTHER PROJECTS OR EXTENSIONS TO THIS PROJECT WITHOUT THE PRIOR WRITTEN CONSENT OF STARBUCKS CORPORATION. THESE DRAWINGS AND SPECIFICATIONS ARE INTENDED TO EXPRESS DESIGN INTENT FOR A PROTOTYPICAL STARBUCKS STORE (WHICH IS SUBJECT TO CHANGE AT ANYTIME) AND DO NOT REFLECT ACTUAL SITE CONDITIONS. NEITHER PARTY SHALL HAVE ANY OBLIGATION NOR LIABILITY TO THE OTHER (EXCEPT STATED ABOVE) UNTIL A WRITTEN AGREEMENT IS FULLY EXECUTED BY BOTH PARTIES.

STARBUCKS TEMPLATE VERSION: i2021-09-13

Design Forum Architects Inc.
2056 Byers Rd
Miamisburg, OH 45342
Tel: (844) 804-7700
Donald J. Rethman
Architect In Charge
License: AR0017303

Design Forum Engineering
2056 Byers Rd
Miamisburg, OH 45342
Tel: (844) 804-7700
Timothy L. Raberding, PE
Professional Engineer
License: 62078

PROJECT NAME:
US 98 & GRIFFIN RD

PROJECT ADDRESS:
3105 US-98 NORTH
LAKELAND, FLORIDA 33801

STORE #:	80004
PROJECT #:	96892-001
ISSUE DATE:	2025-10-10
DESIGNER:	ASHLEY SUEIRAS
PRODUCTION DESIGNER:	ANDY MCLOUD
CHECKED BY:	DONALD RETHMAN

Revision Schedule

Rev	Date	By	Description
2	08/26/25		REV-2

SHEET TITLE:
INTERIOR DETAILS

SCALE: AS SHOWN

SHEET NUMBER:
I-514

10/9/2025 9:55:24 AM C:\Users\julia.gray\Documents\96892-001_80004_US 98 & Griffin Rd, FL_2025_Julia.grayFRYY6.rvt

NOTE:
SHOP DRAWINGS TO BE APPROVED BY SB DESIGNER PRIOR TO FABRICATION.

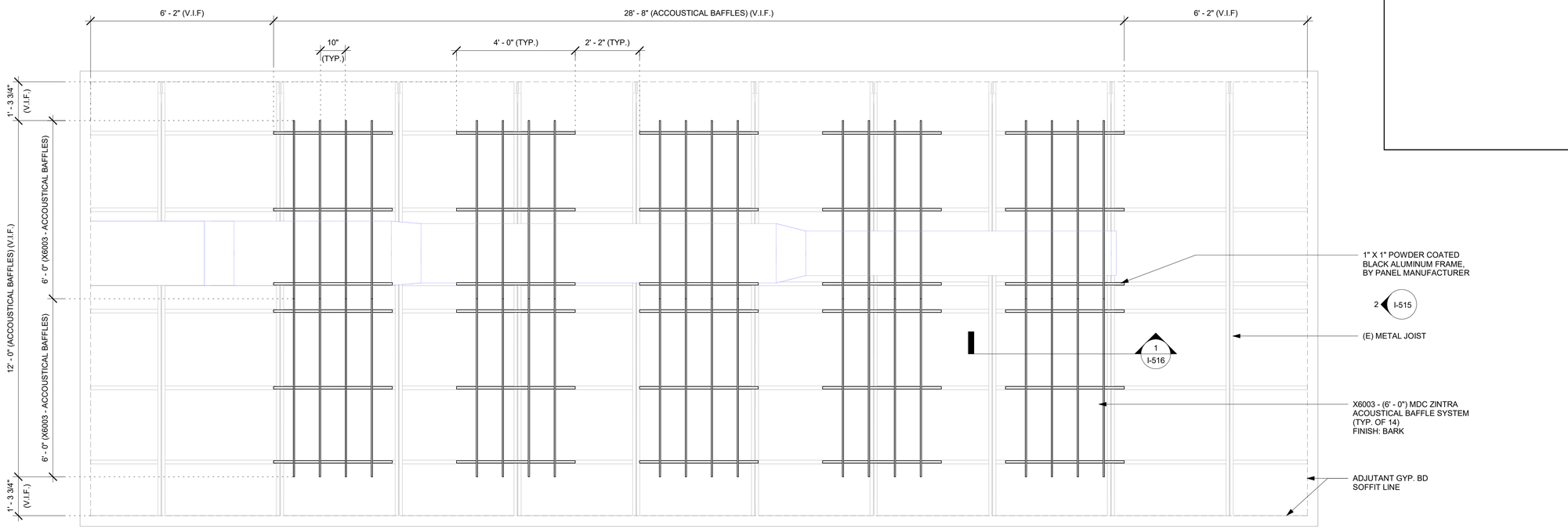

1 ACCOUSTICAL BAFFLES - PLAN
Scale: 1/2" = 1'-0"

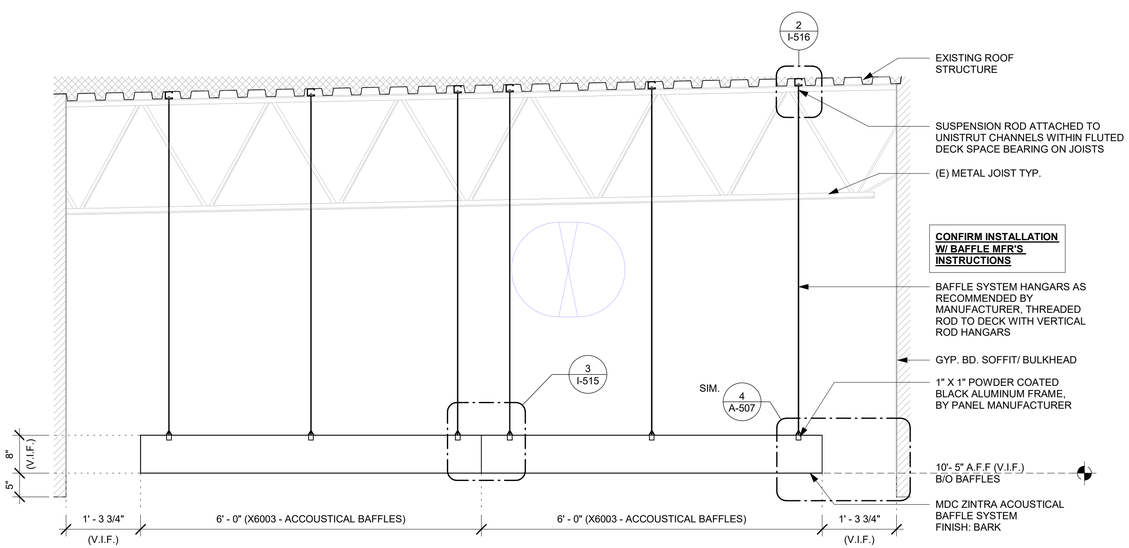

2 ACCOUSTICAL BAFFLES - ELEVATION
Scale: 3/4" = 1'-0"

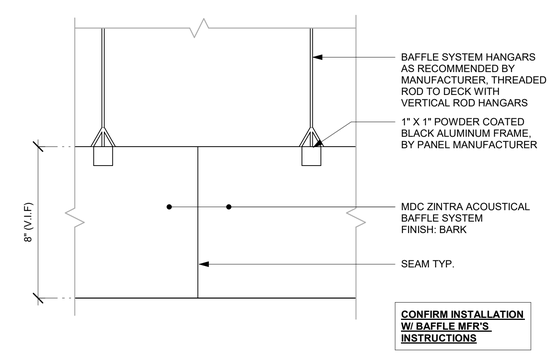

3 DETAIL - ACCOUSTICAL BAFFLE AT SEAM
Scale: 3" = 1'-0"

FOR CONSTRUCTION

© 2019 STARBUCKS COFFEE COMPANY

STARBUCKS®
2401 UTAH AVENUE SOUTH
SEATTLE, WASHINGTON 98134
(206) 318-1575

THESE DRAWINGS AND THE PROJECT MANUAL ARE CONFIDENTIAL AND SHALL REMAIN THE SOLE PROPERTY OF STARBUCKS CORPORATION, WHICH IS THE OWNER OF THE COPYRIGHT IN THIS WORK. THEY SHALL NOT BE REPRODUCED (IN WHOLE OR IN PART), SHARED WITH THIRD PARTIES OR USED IN ANY MANNER ON OTHER PROJECTS OR EXTENSIONS TO THIS PROJECT WITHOUT THE PRIOR WRITTEN CONSENT OF STARBUCKS CORPORATION. THESE DRAWINGS AND SPECIFICATIONS ARE INTENDED TO EXPRESS DESIGN INTENT FOR A PROTOTYPICAL STARBUCKS STORE (WHICH IS SUBJECT TO CHANGE AT ANYTIME) AND DO NOT REFLECT ACTUAL SITE CONDITIONS. NEITHER PARTY SHALL HAVE ANY OBLIGATION NOR LIABILITY TO THE OTHER (EXCEPT STATED ABOVE) UNTIL A WRITTEN AGREEMENT IS FULLY EXECUTED BY BOTH PARTIES.

STARBUCKS TEMPLATE VERSION: i2021-09-13

Design Forum Architects Inc.
2056 Byers Rd
Miamisburg, OH 45342
Tel: (844) 804-7700
Donald J. Rethman
Architect In Charge
License: AR0017303

Design Forum Engineering
2056 Byers Rd
Miamisburg, OH 45342
Tel: (844) 804-7700
Timothy L. Raberding, PE
Professional Engineer
License: 62078

PROJECT NAME:
US 98 & GRIFFIN RD

PROJECT ADDRESS:
3105 US-98 NORTH
LAKELAND, FLORIDA 33801

STORE #:	80004
PROJECT #:	96892-001
ISSUE DATE:	2025-10-10
DESIGNER:	ASHLEY SUEIRAS
PRODUCTION DESIGNER:	ANDY MCLOUD
CHECKED BY:	DONALD RETHMAN

Revision Schedule

Rev	Date	By	Description
2	08/26/25		REV-2

SHEET TITLE:
ACCOUSTICAL BAFFLES

SCALE: AS SHOWN

SHEET NUMBER:
I-515

10/9/2025 9:55:24 AM C:\Users\julia.gray\Documents\96892-001_80004_US 98 & Griffin Rd, FL_2025_Julia.gray\FRYY6.rvt

NOTE:
SHOP DRAWINGS TO BE APPROVED BY SB DESIGNER PRIOR TO FABRICATION.

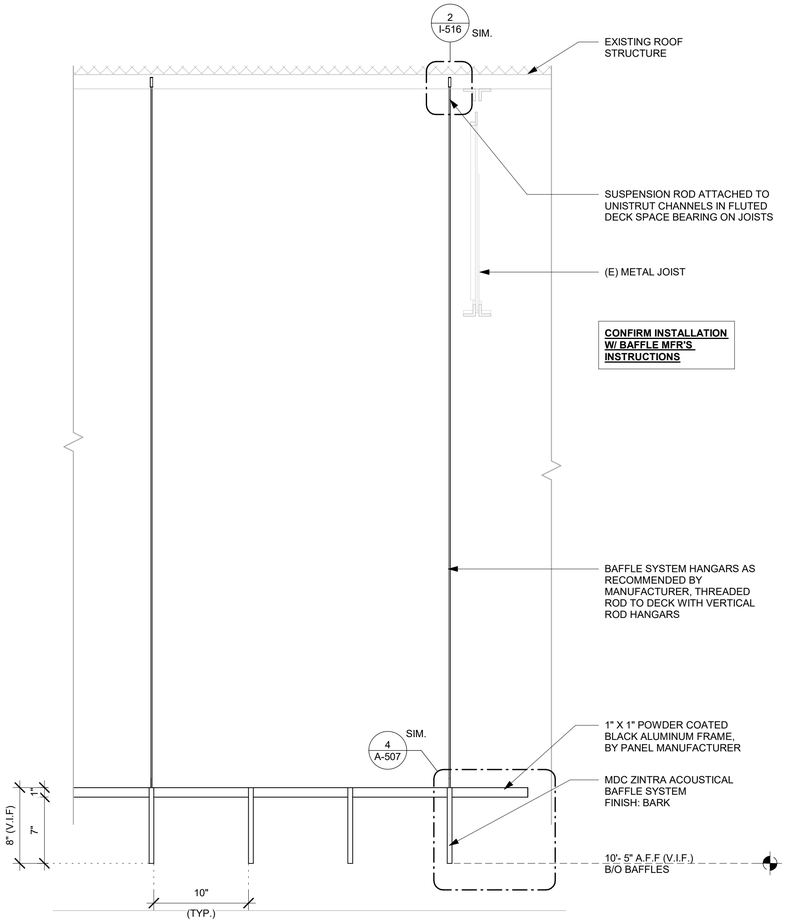

1 ACCOUSTICAL BAFFLES - SECTION
Scale: 1 1/2" = 1'-0"

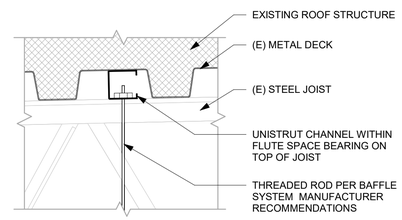

2 PANEL FIXING DETAILS
Scale: 3" = 1'-0"

2

FOR CONSTRUCTION

© 2019 STARBUCKS COFFEE COMPANY

STARBUCKS®
2401 UTAH AVENUE SOUTH
SEATTLE, WASHINGTON 98134
(206) 318-1575

THESE DRAWINGS AND THE PROJECT MANUAL ARE CONFIDENTIAL AND SHALL REMAIN THE SOLE PROPERTY OF STARBUCKS CORPORATION, WHICH IS THE OWNER OF THE COPYRIGHT IN THIS WORK. THEY SHALL NOT BE REPRODUCED (IN WHOLE OR IN PART), SHARED WITH THIRD PARTIES OR USED IN ANY MANNER ON OTHER PROJECTS OR EXTENSIONS TO THIS PROJECT WITHOUT THE PRIOR WRITTEN CONSENT OF STARBUCKS CORPORATION. THESE DRAWINGS AND SPECIFICATIONS ARE INTENDED TO EXPRESS DESIGN INTENT FOR A PROTOTYPICAL STARBUCKS STORE (WHICH IS SUBJECT TO CHANGE AT ANYTIME) AND DO NOT REFLECT ACTUAL SITE CONDITIONS. NEITHER PARTY SHALL HAVE ANY OBLIGATION NOR LIABILITY TO THE OTHER (EXCEPT STATED ABOVE) UNTIL A WRITTEN AGREEMENT IS FULLY EXECUTED BY BOTH PARTIES.

STARBUCKS TEMPLATE VERSION: i2021-09-13

Design Forum Architects Inc.
2056 Byers Rd
Miamisburg, OH 45342
Tel: (844) 804-7700
Donald J. Rethman
Architect In Charge
License: AR0017303

Design Forum Engineering
2056 Byers Rd
Miamisburg, OH 45342
Tel: (844) 804-7700
Timothy L. Raberding, PE
Professional Engineer
License: 62078

PROJECT NAME:
US 98 & GRIFFIN RD

PROJECT ADDRESS:
3105 US-98 NORTH
LAKELAND, FLORIDA 33801

STORE #:	80004
PROJECT #:	96892-001
ISSUE DATE:	2025-10-10
DESIGNER:	ASHLEY SUEIRAS
PRODUCTION DESIGNER:	ANDY MCLOUD
CHECKED BY:	DONALD RETHMAN

Revision Schedule

Rev	Date	By	Description
2	08/26/25		REV-2

SHEET TITLE:
ACCOUSTICAL BAFFLES

SCALE: AS SHOWN

SHEET NUMBER:
I-516

10/9/2025 9:55:25 AM C:\Users\julia.gray\Documents\96892-001_80004_US 98 & Griffin Rd, FL_2025_Julia.grayFRYY6.rvt

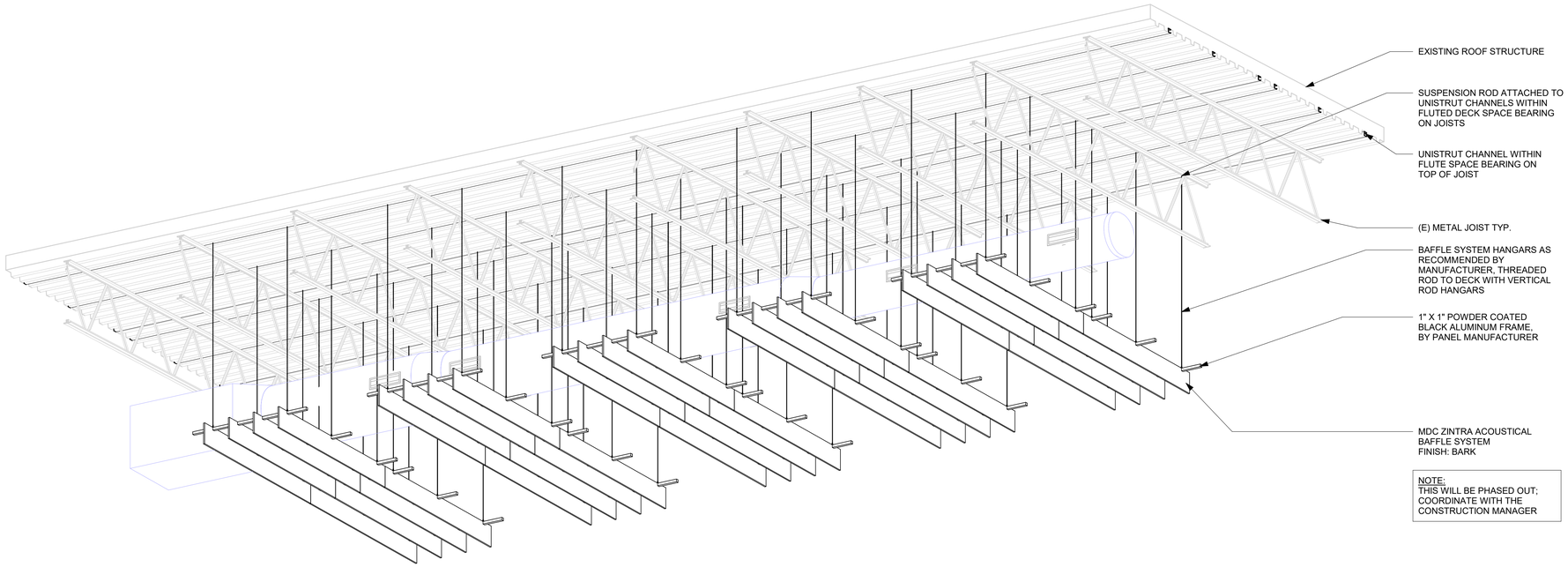

NOTE:
THIS WILL BE PHASED OUT; COORDINATE WITH THE CONSTRUCTION MANAGER

1 ACCOUSTICAL BAFFLES - 3D VIEW
Scale:

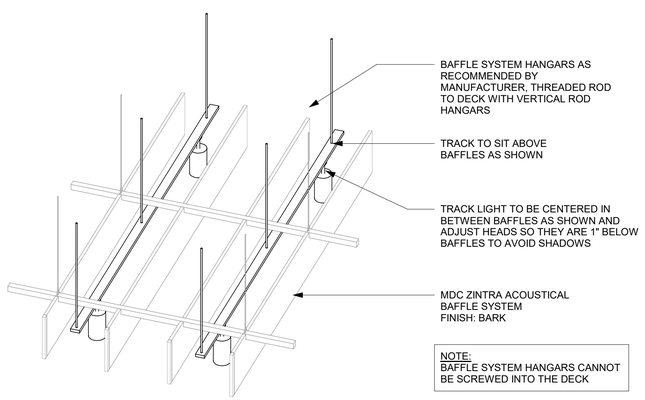

NOTE:
BAFFLE SYSTEM HANGARS CANNOT BE SCREWED INTO THE DECK

2 AXON AT TRACK DETAIL
Scale:

2

NOTE:
SHOP DRAWINGS TO BE APPROVED BY SB DESIGNER PRIOR TO FABRICATION.

FOR CONSTRUCTION

© 2019 STARBUCKS COFFEE COMPANY

STARBUCKS®
2401 UTAH AVENUE SOUTH
SEATTLE, WASHINGTON 98134
(206) 318-1575

THESE DRAWINGS AND THE PROJECT MANUAL ARE CONFIDENTIAL AND SHALL REMAIN THE SOLE PROPERTY OF STARBUCKS CORPORATION, WHICH IS THE OWNER OF THE COPYRIGHT IN THIS WORK. THEY SHALL NOT BE REPRODUCED (IN WHOLE OR IN PART), SHARED WITH THIRD PARTIES OR USED IN ANY MANNER ON OTHER PROJECTS OR EXTENSIONS TO THIS PROJECT WITHOUT THE PRIOR WRITTEN CONSENT OF STARBUCKS CORPORATION. THESE DRAWINGS AND SPECIFICATIONS ARE INTENDED TO EXPRESS DESIGN INTENT FOR A PROTOTYPICAL STARBUCKS STORE (WHICH IS SUBJECT TO CHANGE AT ANYTIME) AND DO NOT REFLECT ACTUAL SITE CONDITIONS. NEITHER PARTY SHALL HAVE ANY OBLIGATION NOR LIABILITY TO THE OTHER (EXCEPT STATED ABOVE) UNTIL A WRITTEN AGREEMENT IS FULLY EXECUTED BY BOTH PARTIES.

STARBUCKS TEMPLATE VERSION: i2021-09-13

Design Forum Architects Inc.
2056 Byers Rd
Miamisburg, OH 45342
Tel: (844) 804-7700
Donald J. Rethman
Architect In Charge
License: AR0017303

Design Forum Engineering
2056 Byers Rd
Miamisburg, OH 45342
Tel: (844) 804-7700
Timothy L. Raberding, PE
Professional Engineer
License: 62078

PROJECT NAME:
US 98 & GRIFFIN RD

PROJECT ADDRESS:
3105 US-98 NORTH
LAKELAND, FLORIDA 33801

STORE #:	80004
PROJECT #:	96892-001
ISSUE DATE:	2025-10-10
DESIGNER:	ASHLEY SUEIRAS
PRODUCTION DESIGNER:	ANDY MCLOUD
CHECKED BY:	DONALD RETHMAN

Revision Schedule

Rev	Date	By	Description
2	08/26/25		REV-2

SHEET TITLE:
ACCOUSTICAL BAFFLES

SCALE: AS SHOWN

SHEET NUMBER:
I-517

DATA DEVICE SCHEDULE - "A"

DESIGN ID	COUNT	DESCRIPTION	FURN. BY	INST. BY	COMMENTS
AUDIO VISUAL					
10005	1	MUSIC SYSTEM	SB	VD	
10013	5	DT QUEUE CAMERA	SB	VD	
10017	2	SPEAKER SURFACE MOUNTED	SB	GC	BLACK EXTERIOR
10076	1	AMPLIFIER - 60W	SB	VD	
12336	1	DT TIMER SYSTEM	SB	VD	
19493	3	SPEAKER PENDANT MOUNTED - BLACK	SB	GC	
22725	1	DT DIGITAL PRODUCTION MONITOR	SB	GC	PART OF RETAIL IT EQUIPMENT PACKAGE
22726	1	DT POS MONITOR ARM TRIPLE SURFACE MOUNTED	SB	GC	PART OF RETAIL IT EQUIPMENT PACKAGE
24351	1	DT HEADSET COMMUNICATION SYSTEM	SB	GC	
DATA					
10002	1	COMPUTER MANAGER WORKSTATION	SB	VD	
10007	1	PRINTER MANAGER WORKSTATION	SB	VD	
18744	1	EQUIPMENT RACK WITH LOCK - 24IN 610MM	SB	VD	
20294	4	IOT MODULE	SB	GC	
24361	8	DIGITAL TEMPERATURE SENSOR	SB	GC	
GRAPHICS - INTERIOR MENU					
22970	3	MENU BOARD - DIGITAL DISPLAY - 44X25.25IN 1121X644MM - BLACK	SB	GC	
22971	3	MENU BOARD - DIGITAL MENU BOARD MOUNTING BRACKET SINGLE SCREEN - BLACK	SB	GC	
POINT OF SALE					
10008	2	POS - REGISTER WITH COMPACT CASH DRAWER	SB	VD	
10014	3	POS PRINTER	SB	GC	
10022	1	MONEY COUNTER	SB	VD	
10029	6	POS BANK	SB	GC	
10075	4	CUP LABELER	SB	GC	
14677	1	POS - DT TENDERING REGISTER	SB	GC	PART OF RETAIL IT EQUIPMENT PACKAGE
14678	1	POS - DT EXPEDITOR	SB	GC	PART OF RETAIL IT EQUIPMENT PACKAGE
SECURITY					
10024	1	SAFE LH - 20X18X26IN 510X455X660MM	SB	GC	
10028	1	SAFE BASE	SB	GC	

WALL BASE SCHEDULE - "B"

DESIGN ID	LENGTH	DESCRIPTION	FURN. BY	INST. BY	COMMENTS
BASE TRIM					
X9100	20' - 2 1/2"	FLOOR FRAME 16 GA 2B SS AROUND CUSTOM WALK-OFF MAT RECESSED	GC	GC	SOURCED FROM VD; SEE DETAIL: 1/I-501
X9102	54' - 3"	SCHLUTER BASE - DILEX - AHK - DARK ANTHRACITE OR EQUIVALENT	GC	GC	SCHLUTER SYSTEM WILL REQUIRE USE OF 90 DEGREE CORNER PIECE TO ACCOMODATE FOR RADIUS TRIM PROFILE. FINISH: DARK ANTHRACITE OR EQUIVALENT
METAL BASE					
X9101	39' - 4 1/4"	METAL BASE - 6IN 150MM - BLACK - MT0028	GC	GC	
TILE BASE					
19795	207' - 5 1/8"	POLYVINYL TILE BASE SHEET - ECO-GRIP - PEWTER - 6X96IN 150X2438MM	GC	GC	
20218	69' - 7 5/8"	TILE BASE - BLOCK - BLACK - 6X24IN 150X600MM	SB	GC	GROUT: MAPEI - 10 BLACK, OR EQUAL

CASEWORK SCHEDULE - "C"

DESIGN ID	COUNT	DESCRIPTION	FURN. BY	INST. BY	COMMENTS
CABINET					
17580	2	CABINET - CBE TEA SHELF - 29IN 735MM - FLAT BLACK MT0028	SB	GC	FINISH: MT0028
19281	2	CABINET - ESPRESSO ICE BIN STAINLESS - 20IN 510MM	SB	GC	
21890	26	CABINET - SIDE PANEL	SB	GC	
21891	9	CABINET - BOTTOM SHELF - 15IN 380MM	SB	GC	
21892	6	CABINET - BACK PANEL - 15IN 380MM	SB	GC	
21893	4	CABINET - ADJUSTABLE SHELF - 15IN 380MM	SB	GC	
21894	7	CABINET - DOOR - 15IN 380MM	SB	GC	FINISH: CP0024
21895	5	CABINET - DOOR TRASH - 15IN 380MM	SB	GC	FINISH: CP0024
21896	1	CABINET - DRAWER - 15IN 380MM	SB	GC	FINISH: CP0024
21898	1	CABINET - BOTTOM SHELF - 18IN 455MM	SB	GC	
21899	1	CABINET - BACK PANEL - 18IN 455MM	SB	GC	
21900	1	CABINET - ADJUSTABLE SHELF - 18IN 455MM	SB	GC	
21901	1	CABINET - DOOR - 18IN 455MM	SB	GC	FINISH: CP0024
21902	5	CABINET - BOTTOM SHELF - 30IN 760MM	SB	GC	
21903	1	CABINET - BACK PANEL - 30IN 760MM	SB	GC	
21904	7	CABINET - ADJUSTABLE SHELF - 30IN 760MM	SB	GC	
21905	2	CABINET - DOOR - 30IN 760MM	SB	GC	FINISH: CP0024
21906	1	CABINET - END CAP FRONTBAR	SB	GC	FINISH: CP0024
21907	2	CABINET - END CAP BACKBAR	SB	GC	FINISH: CP0024
21908	4	CABINET - FILLER PANEL - VARIABLE LENGTH	SB	GC	FINISH: CP0024; LENGTH REQUIRED: (V.I.F) (1) 0' - 7" (2) 0' - 4 3/4" (1) 0' - 6 1/4"
21909	1	CABINET - DT POS UPPER CUBBY - 32IN 815MM	SB	GC	FINISH: PL0019
21910	1	CABINET - FRENCH CLEAT - VARIABLE LENGTH	SB	GC	LENGTH REQUIRED: (V.I.F) (1) 2' - 6 1/2"
21912	3	CABINET - BACK PANEL FOR POS - 30IN 760MM	SB	GC	
21913	2	CABINET - EQUIPMENT MOUNTING PANEL	SB	GC	
22632	1	CABINET - CBE DRY INCLUSION SHELF - 44IN 1120MM - FLAT BLACK MT0028	SB	GC	FINISH: MT0028
22749	1	CABINET - ESPRESSO PUMP MOUNT PANEL	SB	GC	
22986	2	CABINET - DELIVERY DRAWER - 15IN 380MM	SB	GC	FINISH: MT0028
CAFE					
20097	5	SHELVING FRAME - 21IN 535MM - HOT ROLLED STEEL MT0011	SB	GC	
20117	3	CABINET - 36IN 915MM - WHITE OAK WD0073	SB	GC	
20372	1	WALL BAY ON STANDARD 1 UNIT - 36IN 915MM - WHITE OAK WD0073	SB	GC	
20375	1	WALL BAY ON STANDARD 2 UNIT - 72IN 1830MM - WHITE OAK WD0073	SB	GC	
20381	1	FREESTANDING 1 UNIT SHORT - 18IN 455MM - WHITE OAK WD0073	SB	GC	
23964	1	WASTE AND RECYCLE STATION THREE DROP - GOLDEN BLONDE AND WHITE PL0027 CP0002	SB	GC	

CASEWORK SCHEDULE - "C"

DESIGN ID	COUNT	DESCRIPTION	FURN. BY	INST. BY	COMMENTS
COUNTERTOP					
21928	2	COUNTERTOP - END CAP BACKBAR	SB	GC	FINISH: CP0005
22354	1	COUNTERTOP - ESPRESSO SHROUD - 141IN 3580MM	SB	GC	FINISH: CP0005
22395	2	COUNTERTOP - HAND SINK LOW SPLASH - 15IN 380MM	SB	GC	
X5001	1	CUSTOM COUNTERTOP - SIT-HERE	SB	GC	FINISH: CP0005; SEE DETAIL: 2/I-507; 2IN CHAMFERED EDGE
X5004	1	CUSTOM COUNTERTOP - HOS FRONTBAR - 76IN 1930MM	SB	GC	FINISH: CP0005; SIM. DID# 24281; CUSTOM DUE TO 2IN CHAMFERED EDGE
X5005	1	CUSTOM COUNTERTOP - ESPRESSO FRONTBAR - LF - 141IN 3580MM	SB	GC	FINISH: CP0005; SIM. DID# 22352; CUSTOM DUE TO 2IN CHAMFERED EDGE
X5006	1	CUSTOM COUNTERTOP - POS - 84IN 2135MM	SB	GC	FINISH: CP0005; SIM. DID# 22361; CUSTOM DUE TO 2IN CHAMFERED EDGE
X5007	1	CUSTOM COUNTERTOP - END CAP FRONTBAR	SB	GC	FINISH: CP0005; SIM. DID# 21923; CUSTOM DUE TO 2IN CHAMFERED EDGE
X5008	1	CUSTOM COUNTERTOP - 8IN BACKSPLASH - ARIABLE LENGTH	SB	GC	FINISH: CP0005; SEE DETAIL: 6/I-509; LENGTH REQUIRED: (V.I.F) (1) 2' - 6 1/2"
X5009	1	CUSTOM COUNTERTOP - CBE - RF - 152IN 3860MM	SB	GC	FINISH: CP0005; SIM. DID# 22636; CUSTOM DUE TO 8IN INTEGRAL BACKSPLASH
X5010	1	CUSTOM COUNTERTOP - BACKBAR - 15IN 380MM	SB	GC	FINISH: CP0005; SIM. DID# 21925; CUSTOM DUE TO NO INTEGRAL BACKSPLASH
X5011	3	CUSTOM COUNTERTOP - 2IN BACKSPLASH - VARIABLE LENGTH	SB	GC	FINISH: CP0005; SEE DETAIL: 5/I-509; LENGTH REQUIRED: (V.I.F) (2) 2' - 6 1/2" (1) 1' - 7 1/2"
X5015	1	CUSTOM DT ADD COUNTERTOP - 31IN 788MM	SB	GC	FINISH: CP0005; SEE DETAIL: 6/I-514; SIM. DID# 21919; CUSTOM DUE TO 8IN INTEGRAL BACKSPLASH
X5016	1	CUSTOM COUNTERTOP - BACKBAR - 18IN 455MM	SB	GC	FINISH: CP0005; SIM. DID# 21926; CUSTOM DUE TO 8IN INTEGRAL BACKSPLASH
X5017	3	CUSTOM COUNTERTOP - FILLER BACKBAR - VARIABLE LENGTH	SB	GC	FINISH: CP0005; SIM. DID# 21919; CUSTOM DUE TO 8IN INTEGRAL BACKSPLASH; LENGTH REQUIRED: (V.I.F) (1) 0' - 7 3/4" (1) 0' - 5 1/4" (1) 0' - 0 3/4"
X5018	1	CUSTOM COUNTERTOP - FILLER BACKBAR - VARIABLE LENGTH	SB	GC	FINISH: CP0005; SIM. DID# 22636; CUSTOM DUE TO NO INTEGRAL BACKSPLASH; LENGTH REQUIRED: (V.I.F) (1) 0' - 4 3/4"
X5019	1	CUSTOM COUNTERTOP - DT POS - LF - 68IN 1727MM	SB	GC	FINISH: CP0005; SEE DETAIL: 5/I-514; SIM. DID# 22364; CUSTOM DUE TO WIDTH AND 8IN INTEGRAL BACKSPLASH
X5020	1	CUSTOM COUNTERTOP - BREW - LF - 90IN 2285MM	SB	GC	FINISH: CP0005; SIM. DID# 22328; CUSTOM DUE TO 8IN INTEGRAL BACKSPLASH
X5021	1	CUSTOM COUNTERTOP - WARMING - LF - 92IN 2335MM	SB	GC	FINISH: CP0005; SIM. DID# 22376; CUSTOM DUE TO 8IN INTEGRAL BACKSPLASH
DIEWALL					
21885	13	DIEWALL - FRAMING - VARIABLE LENGTH	SB	GC	
21886	3	DIEWALL - BASE - VARIABLE LENGTH	SB	GC	
21887	3	DIEWALL - SUBSTRATE PANEL - VARIABLE LENGTH	SB	GC	
21888	42	DIEWALL - SUPPORT LEG	SB	GC	
X5003	1	CUSTOM DIEWALL - SIT-HERE ROUNDED	SB	GC	SEE DETAIL: 1/I-507
OTHER					
10829	9	CORNER GUARD - .75IN 19MM	SB	GC	LOCATED @ BOH SST
11155	2	ESPRESSO MACHINE PUMP MOUNT - 10X10IN 255X255MM	SB	GC	
21914	8	FRIDGE STOP BRACKET SET	SB	GC	
X5012	1	CUSTOM DT WINDOW SILL TOP	SB	GC	FINISH: CP0005; SEE DETAIL: 5/I-509
X5014	1	CUSTOM SOLID WOOD CAP AT RR VESTIBULE	SB	GC	FINISH: WD0073; SEE DETAIL: 13/I-502; PROVIDED BY CASEWORK VENDOR
X5022	1	CUSTOM WOOD TRIM AT MERCH	SB	GC	FINISH: WD0073; SEE DETAIL: 17/I-502; PROVIDED BY CASEWORK VENDOR
X5023	1	CUSTOM WOOD TRIM AT MERCH	SB	GC	FINISH: WD0073; SEE DETAIL: 18/I-502; PROVIDED BY CASEWORK VENDOR
X5024	3	CUSTOM WOOD FLOATING SHELF AT BACKBAR; FINISH: WALNUT VENEER (WD0077 MAD107)	SB	GC	FINISH: WD0073; SEE DETAIL: 1/I-514; PROVIDED BY CASEWORK VENDOR; LENGTH REQUIRED: (V.I.F) (2) 3' - 8" (1) 5' - 11"
X5026	1	CUSTOM SOLID WOOD CAP AT STOREFRONT	SB	GC	FINISH: WD0073; SEE DETAIL: 2/I-107; PROVIDED BY CASEWORK VENDOR
X5030	3	FRY REGLET "Y" TRIM AT WOOD CLADDING EDGE	SB	GC	FINISH: BLACK; SEE DETAIL: 11/I-502; LOCATED @ CAFE 1/4" POST OUTSIDE CORNER TRIM; MODEL: 1/2" - MWPOSC2550, FINISH: STANDARD POWDER COAT - BLACK. GC TO VERIFY LENGTHS
PANEL					
21933	2	FINISH PANEL - VARIABLE LENGTH	SB	GC	FINISH: WD0073 (MAD 200)
24287	1	FINISH PANEL - HOS - VARIABLE LENGTH	SB	GC	FINISH: WD0073 (MAD 200)
X5002	1	CUSTOM FINISH PANEL - SIT-HERE ROUNDED	SB	GC	FINISH: WD0073 (MAD 200); SEE DETAIL: 1/I-507

DOOR SCHEDULE - "D"

DESIGN ID	COUNT	DESCRIPTION	FURN. BY	INST. BY	COMMENTS
DOOR					
10086	1	DOOR - SINGLE IMPACT DOUBLE ACTING - 36IN 915MM - TYPE G	SB	GC	ELIASON; SEE HARDWARE SET # 11; DOOR TYPE G; HOLLOW METAL DOOR, DOOR FINISH: PL0019; FRAME FINISH: MT0028
10190	2	DOOR - SINGLE FLUSH - 36IN - TYPE E	SB	GC	DOOR FINISH: WD0073 (STAIN TO MATCH), FRAME FINISH: SW7020-SG LOCKNET; SEE HARDWARE SET #6, DOOR TYPE E
X2001	1	DOOR - STOREFRONT METAL FRAME SINGLE - TYPE B	EXIST	EXIST	DOOR; LOCKNET; DOOR FINISH: CLEAR GLASS; FRAME FINISH: DARK BRONZE ALUMINIUM; SEE HARDWARE SET # 2-A, DOOR TYPE B
X2002	1	DOOR - STOREFRONT METAL FRAME DOUBLE - TYPE A	EXIST	EXIST	DOOR; LOCKNET; DOOR FINISH: CLEAR GLASS; FRAME FINISH: DARK BRONZE ALUMINIUM; SEE HARDWARE SET # 3-A, DOOR TYPE A
X2003	1	DOOR - SINGLE FLUSH - SERVICE DOOR - 42IN - TYPE F	EXIST	EXIST	LOCKNET; SEE HARDWARE SET # 42, DOOR TYPE F
X2003	1	TRASH DOOR	EXIST	EXIST	

RESPONSIBILITY LEGEND

FURN. BY	INST. BY
SB - FURNISHED BY STARBUCKS	GC - INSTALLED BY GENERAL CONTRACTOR
GC - FURNISHED BY GENERAL CONTRACTOR	SB - INSTALLED BY STARBUCKS
VD - FURNISHED BY VENDOR	VD - INSTALLED BY VENDOR

NOTE: ALL RESPONSIBILITIES TO BE CONFIRMED WITH STARBUCKS CONSTRUCTION MANAGER PRIOR TO ORDERING / CONSTRUCTION.

FOR CONSTRUCTION

© 2019 STARBUCKS COFFEE COMPANY

STARBUCKS®
2401 UTAH AVENUE SOUTH
SEATTLE, WASHINGTON 98134
(206) 318-1575

THESE DRAWINGS AND THE PROJECT MANUAL ARE CONFIDENTIAL AND SHALL REMAIN THE SOLE PROPERTY OF STARBUCKS CORPORATION, WHICH IS THE OWNER OF THE COPYRIGHT IN THIS WORK. THEY SHALL NOT BE REPRODUCED (IN WHOLE OR IN PART), SHARED WITH THIRD PARTIES OR USED IN ANY MANNER ON OTHER PROJECTS OR EXTENSIONS TO THIS PROJECT WITHOUT THE PRIOR WRITTEN CONSENT OF STARBUCKS CORPORATION. THESE DRAWINGS AND SPECIFICATIONS ARE INTENDED TO EXPRESS DESIGN INTENT FOR A PROTOTYPICAL STARBUCKS STORE (WHICH IS SUBJECT TO CHANGE AT ANYTIME) AND DO NOT REFLECT ACTUAL SITE CONDITIONS. NEITHER PARTY SHALL HAVE ANY OBLIGATION NOR LIABILITY TO THE OTHER (EXCEPT STATED ABOVE) UNTIL A WRITTEN AGREEMENT IS FULLY EXECUTED BY BOTH PARTIES.

STARBUCKS TEMPLATE VERSION: i2021-09-13

Design Forum Architects Inc.
2056 Byers Rd
Miamisburg, OH 45342
Tel: (844) 804-7700
Donald J. Rethman
Architect In Charge
License: AR00017303

Design Forum Engineering
2056 Byers Rd
Miamisburg, OH 45342
Tel: (844) 804-77700
Timothy L. Raberding, PE
Professional Engineer
License: 62078

PROJECT NAME:
US 98 & GRIFFIN RD

PROJECT ADDRESS:
3105 US-98 NORTH
LAKELAND, FLORIDA 33801

STORE #:	80004
PROJECT #:	96892-001
ISSUE DATE:	2025-10-10
DESIGNER:	ASHLEY SUEIRAS
PRODUCTION DESIGNER:	ANDY MCLOUD
CHECKED BY:	DONALD RETHMAN

Revision Schedule

Rev	Date	By	Description
1	08/26/25		REV-1
2	08/26/25		REV-2

SHEET TITLE:
SCHEDULES

SCALE: NO SCALE

SHEET NUMBER:
I-601

10/9/2025 9:55:27 AM C:\Users\julia.gray\Documents\96892-001_80004_US 98 & Griffin Rd, FL_2025_Julia.grayFRYY6.rvt

SPECIALTY EQUIPMENT SCHEDULE - "E"

DESIGN ID	COUNT	DESCRIPTION	FURN. BY	INST. BY	COMMENTS
COOLING					
10267	6	FRIDGE UNDERCOUNTER 1 DOOR - 27IN 685MM	SB	GC	
10970	1	FRIDGE REACH IN 1 DOOR LH - 29IN 735MM	SB	GC	
11083	2	FRIDGE REACH IN 2 DOOR - 51X35IN 1295X890MM	SB	GC	
12618	2	FRIDGE UNDERCOUNTER 1 DOOR WITH SHELF - 27IN 685MM	SB	GC	
13620	1	FREEZER REACH IN 1 DOOR LH - 27IN 685MM	SB	GC	
13682	2	FREEZER REACH IN 2 DOOR - 54IN 1370MM	SB	GC	
20011	1	FRIDGE NITRO 2 TAP JT NITCOM RH	SB	GC	KIT INCLUDES UNDERCOUNTER FRIDGE, FONT, TRAY, AND TUBING
EQUIPMENT					
10808	1	GRINDER DITTING KR1203	SB	GC	
12508	2	BLENDER QUIET MODEL ON COUNTER	SB	GC	
19742	2	ESPRESSO MACHINE MASTRENA II	SB	GC	
20032	2	OVEN EIKON E2S - BLACK	SB	GC	
21679	1	NITROGEN GENERATOR ELEMENT COMPACT	SB	GC	
22885	1	BREWER CLOVER VERTICA DOUBLE	SB	GC	
23380	1	BREWER CLOVER VERTICA INSTALL KIT	SB	GC	
2 23381	1	BREWER CLOVER VERTICA CORD	SB	GC	
24007	1	DISHWASHER LXNR ADVANSYS	SB	GC	
FOOD CASE					
16238	1	FOOD CASE - ZEPHYR - 66IN 1675MM	SB	GC	
ICE					
10527	2	ICE - BIN DROP IN 45LB 20KG	SB	GC	
18029	1	ICE - BIN B110	SB	GC	BPF-1 ADAPTER KIT (011076103) REQUIRED WHEN PAIRING WITH 30" (760MM) ICE MACHINES
19278	2	ICE - BIN DROP IN 45LB 20KG HORIZONTAL	SB	GC	
2 23181	1	ICE - MACHINE HMD2110RBT REMOTE COOLED	SB	GC	
23338	1	ICE - BIN ADAPTOR FOLLETT B110H22H30 PEDESTAL TOP FOR B110	SB	GC	
OTHER					
10099	2	RESTROOM TOILET PAPER HOLDER	SB	GC	
10172	2	RESTROOM SEAT COVER DISPENSER	SB	GC	
10179	2	HAND DRYER SURFACE MOUNTED	SB	GC	
10384	2	DIAPER CHANGING STATION HORIZONTAL	SB	GC	
10396	1	CUP DISPENSER SHORT HOT VERTICAL	SB	GC	
10501	1	FIRE EXTINGUISHER	GC	GC	SPEC: MANUFACTURER: PRODUCT PRO 460; PART #21005785; MULTIPURPOSE DRY-CHEMICAL TYPE UL RATED 4-A, 60-B:C, 10LB; METAL STRAP BRACKET PART # 366242
10769	2	RESTROOM GRAB BAR VERTICAL - 18IN 455MM	SB	GC	
10791	3	CUP DISPENSER GRANDE VENTI COLD VERTICAL	SB	GC	
2 10855	3	CUP DISPENSER GRANDE VENTI HOT VERTICAL	SB	GC	
10859	2	RESTROOM GRAB BAR - 48IN 1220MM	SB	GC	
10862	2	RESTROOM GRAB BAR - 36IN 915MM	SB	GC	
10947	3	SOAP DISPENSER WALL MOUNTED	SB	GC	
10977	1	PAPER TOWEL DISPENSER FULL SIZE	SB	GC	
10992	2	PAPER TOWEL DISPENSER HALF SIZE - TRANSLUCENT GRAY	SB	GC	
11115	2	SOAP DISPENSER SINK MOUNTED	SB	GC	
13330	1	MOBILE CUP DISPENSER CADDY	SB	GC	
13584	1	CUP DISPENSER TRENTA COLD VERTICAL	SB	GC	
20403	6	KEG - 3GAL	SB	GC	
21679	1	NITRO 2 TAP FONT JT NITCOM	SB	GC	DO NOT ORDER - INCLUDED IN KIT
21883	4	POWER STRIP - 72IN 1829MM - BLACK			
21988	2	HAND DRYER BACK PANEL	SB	GC	
22627	1	NITRO 2 TAP HANDLE WITH BADGE AND MOUNT KIT	SB	GC	JOE TAP, FOR USE AT BACKBAR NITRO FONT
STORAGE					
10222	2	WIRE SHELF GRID AT SINK	SB	GC	
10416	11	WORKROOM SHELVING - 36IN 915MM	SB	GC	
10462	11	WORKROOM SHELVING POSTS	SB	GC	
10698	1	MOP RACK WITH 3 HOLDERS	SB	GC	
13834	1	BASE - 24X18IN 610X455MM	SB	GC	ITEM PROVIDED BY PENTAIR FOR USE WITH WATER FILTRATON SYSTEM
17255	1	PASTRY TRAY CART - 60IN 1525MM PASTRY TRAY CART - 60IN 1525MM	SB	GC	
17264	1	ROLLING PASTRY TRAY THAW RACK - 20X26IN 510X660MM	SB	GC	
22212	1	WORKROOM SHELVING CART KIT	SB	GC	
2 24271	1	FILTER - 20 GALLON RO SYSTEM STORAGE TANK SHELF	SB	GC	ITEM PROVIDED BY PENTAIR FOR USE WITH WATER FILTRATON SYSTEM
TK0048	2	5 COMP LOCKER - 15IN 380MM	SB	GC	

CEILING TREATMENT SCHEDULE - "F"

DESIGN ID	COUNT	DESCRIPTION	FURN. BY	INST. BY	COMMENTS
CEILING					
X6003	10	ACOUSTICAL BAFFLE SYSTEM - 72X48IN 1829X1220MM - 10IN SPACING - FINISH: BARK	SB	GC	FOR ORDERING CONTACT STARBUCKS@MDCWALL.COM. FIX SUPPLIED HARDWARE TO ARMSTRONG 15/16" T GRID, THEN FEED WIRE THROUGH BAFFLES AND ADJUST HEIGH ACCORDINGLY. FINISH: BARK; SEE DETAILS: 1/I-515, 3' - 6" SPACING BETWEEN MODULES.

2

FURNITURE SCHEDULE - "F"

DESIGN ID	COUNT	DESCRIPTION	FURN. BY	INST. BY	COMMENTS
CHAIR					
17852	29	CHAIR - CAFE PYRAMID - BLACK AND BROWN ROPE MT0028 F0194	SB	GC	
18110	4	CHAIR - STOOL COUNTER HEIGHT JULIE - WHITE OAK WD0073	SB	GC	
20087	11	CHAIR - LOUNGE PYRAMID - BLACK AND BROWN ROPE MT0028 F0194	SB	GC	
21367	1	CHAIR - CAFE PEGGY UPHOLSTERED - WHITE OAK AND CARAMEL BROWN NATURAL WD0073 F0008	SB	GC	
22719	3	CHAIR - LOUNGE MOON - BLACK AND BLACK NATURAL MT0028 F0046	SB	GC	
23056	10	CHAIR - CAFE PEGGY UPHOLSTERED - BLACK OAK AND BLACK NATURAL WD0035 F0046	SB	GC	
23448	4	CHAIR - LOUNGE HANS 2.0 - BLACK	SB	GC	
24245	4	CHAIR - STOOL 18IN 455MM CROSS STITCHED UPHOLSTERED ROUND - BLACK AND CHERRY NATURAL WD0035 F0264	SB	GC	
24369	6	CHAIR - CAFE SADOVE UPHOLSTERED - SAND AND CARAMEL	SB	GC	
24370	11	CHAIR - STOOL BAR HEIGHT SADOVE UPHOLSTERED - SAND AND CARAMEL	SB	GC	
24397	1	CHAIR - LOUNGE LOTTIE - BANKER SADDLE	SB	GC	
24398	1	CHAIR - LOUNGE LOTTIE - LICORICE SIERRA	SB	GC	
TK0077	1	CHAIR - MANAGERS WORKSTATION	SB	GC	STEELCASE SERIES ONE ARMLESS
DESK					
TK0053	1	DESK - MANAGERS WORKSTATION SHELVES - 48IN 1220MM	SB	GC	
TK0076	1	DESK - MANAGERS WORKSTATION - 48X24X27IN 1220X610X685MM	SB	GC	
MIRROR					
14350	2	MIRROR - RESTROOM ANGLED- 18X36IN 455X915MM	SB	GC	INSTALLED AT CENTER OF (E) SINK, MIN. 40" A.F.F. TO B.O. MIRRORR.
TK0050	1	MIRROR - BOH	SB	GC	SEE DETAIL: 3/I-513
OTHER					
10756	2	COAT HOOK 1 PRONG SQUARE - 2IN 50MM - SST	SB	GC	
14474	3	PURSE HOOK FLAT METAL - BLACK MT0028	SB	GC	
TK0051	1	COAT HOOK STRIP - 30IN 760MM	SB	GC	BLACK FINISH
RUG					
X6001	1	RUG - GRAPHIC HERRINGBONE CINNAMON BORDER:2",BOLD ETHIC. ' 20' - 0" x 9' - 9"	SB	GC	BY MATTER SURFACES CONTACT: rhusty@mattersurfaces.com 404-710-7357 Mattersurfaces.com
SOFA					
TKX01	2	SOFA - HAMILTON LEATHER - BURNT SIENNA	SB	GC	MADE TO ORDER ITEM, ORDER AHEAD OF TIME
STORAGE					
TK0078	1	FILE MOBILE PEDESTAL WITH CUSHION AND LOCK	SB	GC	
TK0079	1	MANAGERS DESK CART - 24X20IN 610X510MM	SB	GC	
TABLE					
17339	4	TABLE - CAFE METAL PEDESTAL BASE ROUND - 24IN 610MM - BLACK MT0028	SB	GC	
17340	2	TABLE - CAFE METAL PEDESTAL BASE SQUARE - 24IN 610MM - BLACK MT0028	SB	GC	
17341	2	TABLE - ACCESSIBLE METAL WITH TAPERED LEGS - 36X24IN 915X610MM - BLACK MT0028	SB	GC	
18399	1	TABLE - COMMUNITY CAFE HEIGHT ANGLE BASE - 8 SEAT WIDE - WHITE OAK WD0073	SB	GC	
20127	4	TABLE - OCCASIONAL SIDE CAMERON - FLAT BLACK MT0028	SB	GC	EXTERIOR FURNITURE
20128	6	TABLE - OCCASIONAL COFFEE CAMERON - FLAT BLACK MT0028	SB	GC	
21449	3	TABLE - BASE CAFE HEIGHT BOTTLE - FLAT BLACK MT0028	SB	GC	
21453	4	TABLE - BASE ACCESSIBLE BOTTLE - FLAT BLACK MT0028	SB	GC	
21800	2	TABLE - TOP ACCESSIBLE ROUND EDGE OBLONG - 48X24IN 1220X610MM - WHITE OAK WD0073	SB	GC	
21840	1	TABLE - TOP ROUND EDGE ROUND - 24IN 610MM - BLACK WD0035	SB	GC	
21845	2	TABLE - TOP ROUND EDGE ROUND - 30IN 760MM - WHITE OAK WD0073	SB	GC	
21848	1	TABLE - TOP ROUND EDGE SQUARE - 24IN 610MM - WHITE OAK WD0073	SB	GC	
21979	2	TABLE - OCCASIONAL SIDE WING - WHITE OAK WD0073	SB	GC	
24140	4	TABLE - TOP POV CIRCLE - 27.5IN 700MM - OAK STANDARD	SB	GC	TOP AND BASE HAVE SEPARATE DIDS. ORDER 1 BASE PER TOP.
24273	4	TABLE - BASE BAR HEIGHT POV 463 - OAK STANDARD	SB	GC	TOP AND BASE HAVE SEPARATE DIDS. ORDER 1 BASE PER TOP.
TK0027	5	TABLE - OCCASIONAL SIDE COCO	SB	GC	
TKX03	2	TABLE - WEST ELM - ORGANIC MODULAR TABLE - LARGE OAK	SB	GC	SKU: 1867724
TKX04	1	TABLE - ORGANIC MODULAR TABLE - SMALL BLACK ON ASH	SB	GC	SKU 3125173
TKX05	1	PORTSIDE ALUMINIUM OUTDOOR DINING TABLE	SB	GC	SKU 9884205
WINDOW TREATMENT					
22486	22	ROLLER SHADE - DARK BROWN - 5PC OPEN	SB	VD	LENGTH TO ALIGN WITH BOTTOM MULLION; LENGTH REQUIRED: (5) 2' - 11" LENGTH (4) 2' - 8" LENGTH (1) 3' - 0" LENGTH (2) 3' - 8" LENGTH (8) 3' - 2" LENGTH (1) 3' - 3" LENGTH (1) 6' - 0" LENGTH
X6002	3	CURTAIN - FABRIC SOUND ACOUSTICAL DRAPERIES - FIBER 3 MELANGE SELF-LINED CURATIN RODS_KIRSCH RIPPLE FOLD ARCHITRAC RODS CEILING MOUNTED TRACK: BLACK FINISH	SB	VD	VENDOR: SNOW SOUND CONTACT MIKE DARDASHTI +1 310 467 2830 MIKE.D@SNOWSOUNDUSA.COM VENDOR TO SHARE SUBMITTAL FOR DESIGN APPORVAL

2

GRAPHICS AND ARTWORK SCHEDULE - "G"

DESIGN ID	COUNT	DESCRIPTION	FURN. BY	INST. BY	COMMENTS
GRAPHIC - FILM					
19458	4	INTERIOR WINDOW FILM FASARA - DUSTED CRYSTAL	SB	GC	SIZE REQUIRED: (V.I.F.): (2) 4' - 4" W X 7' - 8" H (2) 4' - 4" W X 1' - 10" H
GRAPHICS - ARTWORK					
X1001	1	SBXART_16784 - FRAMED WITH NO MAT - ART SIZE - 10.5" W X 10.5" H ; OVERALL SIZE - 12" W X 12" H EBONY, BLACK WOOD FRAME NON-GLARE ACRYLIC	SB	GC	SEE ELEVATION: 1/I-201
X1002	1	SBXART_17110 - FRAMED WITH MAT - ART SIZE - 11 1/2" W X 8 1/2" H ; OVERALL SIZE - 1'-5" W X 1'-2" H EBONY, BLACK WOOD FRAME 2" MAT NON-GLARE ACRYLIC	SB	GC	SEE ELEVATION: 1/I-201
2 X1003	1	SBXART_22090 - FRAMED WITH MAT - ART SIZE - 11 1/2" W X 8 1/2" H ; OVERALL SIZE - 1'-11" W X 3'-3" H EBONY, BLACK WOOD FRAME 4" MAT NON-GLARE ACRYLIC	SB	GC	SEE ELEVATION: 2/I-201

GRAPHICS AND ARTWORK SCHEDULE - "G"

DESIGN ID	COUNT	DESCRIPTION	FURN. BY	INST. BY	COMMENTS
X1004	1	SBXART_19149 - FRAMED WITH MAT - ART SIZE - 1'-8 1/2" W X 1'-0 1/2" H ; OVERALL SIZE - 2'-4" W X 1'-8" H EBONY, BLACK WOOD FRAME 4" MAT NON-GLARE ACRYLIC	SB	GC	SEE ELEVATION: 2/I-202
X1005	1	SBXART_16785- FRAMED WITH NO MAT - ART SIZE - 8.5" W X 8.5"H ; OVERALL SIZE - 10" W X 10" H EBONY, BLACK WOOD FRAME NON-GLARE ACRYLIC	SB	GC	SEE ELEVATION: 2/I-202
X1006	1	SBXART_23308- FRAMED WITH NO MAT - ART SIZE - 10.5" W X 7.5" H ; OVERALL SIZE - 12" W X 9" H EBONY, BLACK WOOD FRAME NON-GLARE ACRYLIC	SB	GC	SEE ELEVATION: 2/I-202
X1007	1	SBXART_16782- FRAMED WITH NO MAT - ART SIZE - 8.5" W X 8.5"H ; OVERALL SIZE - 10" W X 10" H EBONY, BLACK WOOD FRAME NON-GLARE ACRYLIC	SB	GC	SEE ELEVATION: 2/I-202
2 X1008	1	SBXART_16968 - FRAMED WITH MAT - ART SIZE - 9 1/2" W X 13 1/2" H ; OVERALL SIZE - 1'-3" W X 1'-7" H EBONY, BLACK WOOD FRAME 4" MAT NON-GLARE ACRYLIC	SB	GC	SEE ELEVATION: 2/I-202
X1009	1	SBXART_22155 - FRAMED WITH MAT - ART SIZE - 10 1/2" W X 16 1/2" H ; OVERALL SIZE - 18" W X 24" H EBONY, BLACK WOOD FRAME 4" MAT NON-GLARE ACRYLIC	SB	GC	SEE ELEVATION: 2/I-202
X1010	1	COMMUNITY BOARD MAGNETIC WITH 3/4" FRAME: 2A - EBONIZED WALNUT ; OVERALL SIZE: 36" W X 46" H	SB	GC	SEE ELEVATION: 1/I-204
2 X1011	2	SBXART_16784; WRAPPED CANVAS IN FLOAT FRAME; ART SIZE : 21.5" W X 21.5" H; OVERALL SIZE: 23" W X 23" H	SB	GC	SEE ELEVATION: 2/I-205
GRAPHICS - OTHER					
19778	1	RESTROOM SIGN MEN ACCESSIBLE	SB	GC	
19779	1	RESTROOM SIGN WOMEN ACCESSIBLE	SB	GC	

RESPONSIBILITY LEGEND

FURN. BY	INST. BY
SB - FURNISHED BY STARBUCKS	GC - INSTALLED BY GENERAL CONTRACTOR
GC - FURNISHED BY GENERAL CONTRACTOR	SB - INSTALLED BY STARBUCKS
VD - FURNISHED BY VENDOR	VD - INSTALLED BY VENDOR

NOTE: ALL RESPONSIBILITIES TO BE CONFIRMED WITH STARBUCKS CONSTRUCTION MANAGER PRIOR TO ORDERING / CONSTRUCTION.

FOR CONSTRUCTION

© 2019 STARBUCKS COFFEE COMPANY

STARBUCKS®
2401 UTAH AVENUE SOUTH
SEATTLE, WASHINGTON 98134
(206) 318-1575

THESE DRAWINGS AND THE PROJECT MANUAL ARE CONFIDENTIAL AND SHALL REMAIN THE SOLE PROPERTY OF STARBUCKS CORPORATION, WHICH IS THE OWNER OF THE COPYRIGHT IN THIS WORK. THEY SHALL NOT BE REPRODUCED (IN WHOLE OR IN PART), SHARED WITH THIRD PARTIES OR USED IN ANY MANNER ON OTHER PROJECTS OR EXTENSIONS TO THIS PROJECT WITHOUT THE PRIOR WRITTEN CONSENT OF STARBUCKS CORPORATION. THESE DRAWINGS AND SPECIFICATIONS ARE INTENDED TO EXPRESS DESIGN INTENT FOR A PROTOTYPICAL STARBUCKS STORE (WHICH IS SUBJECT TO CHANGE AT ANYTIME) AND DO NOT REFLECT ACTUAL SITE CONDITIONS. NEITHER PARTY SHALL HAVE ANY OBLIGATION NOR LIABILITY TO THE OTHER (EXCEPT STATED ABOVE) UNTIL A WRITTEN AGREEMENT IS FULLY EXECUTED BY BOTH PARTIES.

STARBUCKS TEMPLATE VERSION: i2021-09-13

Design Forum Architects Inc.
2056 Byers Rd
Miamisburg, OH 45342
Tel: (844) 804-7700
Donald J. Rethman
Architect In Charge
License: AR0017303

Design Forum Engineering
2056 Byers Rd
Miamisburg, OH 45342
Tel: (844) 804-7700
Timothy L. Raberding, PE
Professional Engineer
License: 62078

PROJECT NAME:
US 98 & GRIFFIN RD

PROJECT ADDRESS:
3105 US-98 NORTH
LAKELAND, FLORIDA 33801

STORE #:	80004
PROJECT #:	96892-001
ISSUE DATE:	2025-10-10
DESIGNER:	ASHLEY SUEIRAS
PRODUCTION DESIGNER:	ANDY MCLOUD
CHECKED BY:	DONALD RETHMAN

Revision Schedule

Rev	Date	By	Description
2	08/26/25		REV-2

SHEET TITLE:
SCHEDULES

SCALE: NO SCALE

SHEET NUMBER:
I-602

10/9/2025 9:55:28 AM C:\Users\julia.gray\Documents\96892-001_80004_US 98 & Griffin Rd, FL_2025_Julia.grayFRYY6.rvt

LIGHTING FIXTURE SCHEDULE - "L"

DESIGN ID	COUNT	DESCRIPTION	FURN. BY	INST. BY	BULB	COMMENTS
EXIT						
19045	2	LED EXIT SIGN WITH EMERGENCY LIGHT - WHITE AND GREEN	SB	GC	INTEGRATED LED	
19050	2	LED EXIT SIGN RECESSED - ALUMINUM AND GREEN	SB	GC	INTEGRATED LED	
19057	2	LED EMERGENCY LIGHT DOUBLE - BLACK	SB	GC	INTEGRATED LED	
LAMP						
X7001	1	CB2 - POLAR BLACK CEMENT FLOOR LAMP	SB	GC	INTEGRATED LED	SKU:445828
PENDANT						
20660	1	PENDANT - ANDLIGHT SPOTLIGHT VOLUMES - BLACK	SB	GC	AS PACKAGED: 1X LED G25 6.5W (DOWN); 1X LED A15 4.5W (UP)	COMBO: DOWNLIGHT : D , UPLIGHT : A
20661	1	PENDANT - ANDLIGHT SPOTLIGHT VOLUMES - BLACK	SB	GC	AS PACKAGED: 1X LED G25 6.5W (DOWN); 1X LED A15 4.5W (UP)	COMBO: DOWNLIGHT : D , UPLIGHT : B
20662	1	PENDANT - ANDLIGHT SPOTLIGHT VOLUMES - BLACK	SB	GC	AS PACKAGED: 1X LED G25 6.5W (DOWN); 1X LED A15 4.5W (UP)	COMBO: DOWNLIGHT : B , UPLIGHT : D
20663	1	PENDANT - ANDLIGHT SPOTLIGHT VOLUMES - BLACK	SB	GC	AS PACKAGED: 1X LED G25 6.5W (DOWN); 1X LED A15 4.5W (UP)	COMBO: DOWNLIGHT : D , UPLIGHT : B
24114	3	PENDANT - PENSEE - GREEN AND GOLD	SB	GC	INTEGRATED LED	
RECESSED CAN						
21771 (2)	43	CAN - LED ADJUSTABLE RECESSED - 3IN 75MM - BLACK - 800LM FLOOD	SB	GC	INTEGRATED LED	
21774	6	CAN - LED ADJUSTABLE RECESSED - 3IN 75MM - WHITE - 700LM WF	SB	GC	INTEGRATED LED	
SCONCE						
14893	1	LED PICTURE LIGHT TRADITIONAL - 14IN 355MM - BRONZE	SB	GC	INTEGRATED LED	
(2) 20750	2	SCONCE - KUZCO PLUTO TRIPLE - VINTAGE BRASS	SB	GC	INTEGRATED LED	
20778	1	SCONCE - RBW CRISP - FROSTED	SB	GC	INTEGRATED LED	
21227	3	LED SECURITY LIGHT WST - BLACK - 1500LM FORWARD	SB	GC	INTEGRATED LED	
STRIP						
22215	4	STRIP - LED TAPE IN HOUSING - VARIABLE LENGTH - BLACK - 350LM PER FT	SB	GC	INTEGRATED LED	FIELD TRIMMABLE TO 0.9 IN LENGTHS V.I.F. (2) 24' - 0" (1) 15' - 0" (1) 14' - 0"
TRACK						
12946	4	TRACK - WITH CONNECTORS - 4FT 122CM - BLACK - 1 CIRCUIT (2)	SB	GC	INTEGRATED LED	ALL BAR / CAFE TRACK LIGHTING TO BE RUN THROUGH 1A / 2A CURRENT LIMITING DEVICE #RCLF12BL-TCL2BL; SEE ELECTRICAL DRAWINGS FOR ADDITIONAL INFORMATION
12949	14	TRACK - WITH CONNECTORS - 12FT 365CM - BLACK - 1 CIRCUIT	SB	GC	INTEGRATED LED	ALL BAR / CAFE TRACK LIGHTING TO BE RUN THROUGH 1A / 2A CURRENT LIMITING DEVICE #RCLF12BL-TCL2BL; SEE ELECTRICAL DRAWINGS FOR ADDITIONAL INFORMATION
21777	6	TRACK - LED FIXTURE WITH SNOOT - 3IN 75MM - BLACK - 1100LM SPOT	SB	GC	INTEGRATED LED	
21779	56	TRACK - LED FIXTURE WITH SNOOT - 3IN 75MM - BLACK - 1100LM FLOOD	SB	GC	INTEGRATED LED	
TROFFER						
23055	5	TROFFER - LED RECESSED - 24X48IN 600X1200MM - WHITE - 2700K	SB	GC	INTEGRATED LED	

MECHANICAL EQUIPMENT SCHEDULE - "M"

DESIGN ID	COUNT	DESCRIPTION	FURN. BY	INST. BY	COMMENTS
FAN					
20671	4	60IN BLACK HAIKU - I SERIES - INDOOR FANS	SB	GC	BY - BIG ASS FANS
HVAC					
(2) 10317	6	HVAC - VAV SUPPLY 4 WAY SQUARE - 24IN 610MM	GC	GC	COLOR TO MATCH CEILING, REFER TO MECHANICAL DRAWINGS.
X1200	8	HVAC - SUPPLY LINEAR - 4IN	GC	GC	COLOR TO MATCH CEILING, REFER TO MECHANICAL DRAWINGS.
OTHER					
17797	1	ENERGY MANAGEMENT SYSTEM - HVAC ONLY	SB	GC	

PAINT SCHEDULE

COLOR CODE	DESCRIPTION	LRV	FURN. BY	INST. BY	COMMENTS
SW6991-ES	SW - BLACK MAGIC - EEGSHELL	3	GC	GC	USE PRIMER CP-1
SW7020-ES	SW - BLACK FOX - EGGSHELL	7	GC	GC	USE PRIMER CP-1
SW7020-SG	SW - BLACK FOX - SEMIGLOSS	7	GC	GC	USE PRIMER CP-1
SW7031-ES	SW - MEGA GREIGE - EGGSHELL	37	GC	GC	USE PRIMER CP-1
(2) SW9090-ES	SW - CARAIBE - EGGSHELL	13	GC	GC	USE PRIMER CP-1

PLUMBING FIXTURE SCHEDULE - "P"

DESIGN ID	COUNT	DESCRIPTION	FURN. BY	INST. BY	COMMENTS
DRAIN					
10294	9	DRAIN - FLOOR SINK SQUARE - 12IN 305MM	SB	GC	<varies>
10594	2	DRAIN - FLOOR SINK SQUARE - 5IN 125MM	GC	GC	ZURN ZN415B
10726	7	DRAIN - GRATE HALF SQUARE - 12IN 305MM	SB	GC	
EQUIPMENT					
(2) X8019	1	HOT WATER RECIRCULATION PUMP	GC	GC	BELL & GOSSETT MODEL NBF-36 PUMP WITH BELL & GOSSETT AQS-3/4 AQUASTAT, AND BELL & GOSSETT TC-1 AUTOMATIC TIMER
FAUCET					
10152	1	FAUCET - DOUBLE LABORATORY WITH BENT RISER SPOUT	SB	GC	
10153	4	FAUCET - WATER TOWER - 12IN 305MM	SB	GC	
10215	2	FAUCET - DOUBLE LABORATORY WITH SWING SPOUT	SB	GC	
10447	1	FAUCET - PRE RINSE SPRAYER WALL MOUNTED	SB	GC	
10597	2	FAUCET - SINGLE HANDLE	SB	GC	
10804	1	FAUCET - PRE RINSE SWING SPOUT	SB	GC	
10922	1	FAUCET - MOP SINK WALL MOUNTED	SB	GC	
10943	1	FAUCET - SINGLE LABORATORY WITH SWING SPOUT	SB	GC	
11003	2	FAUCET - METERED	SB	GC	
13588	1	FAUCET - HAND SINK WALL MOUNTED	SB	GC	
21352	2	FAUCET - RESTROOM WITH MOTION SENSOR	SB	GC	
22642	3	FAUCET - INSTANTHOT SYSTEM 2 BUTTON WITH BOILER AND BRACKET	SB	GC	KIT INCLUDES FONT, UNDERCOUNTER BOILER AND BOILER BRACKET FOR SIDE PANEL MOUNTING. BRACKET CAN BE FLOOR MOUNTED USING SET OF (4) STAINLESS STEEL LEGS, ORDERED SEPARATELY THROUGH VENDOR.
FILTER					
12501	1	FILTER - RO SYSTEM 600GPD	SB	VD	
12507	1	FILTER - RO SYSTEM STORAGE TANK RO40	SB	VD	
12896	1	FILTER - BRINE TANK	SB	VD	
12899	2	FILTER - POLY GLASS VESSEL	SB	VD	
13076	1	FILTER - PREFILTRATION SYSTEM	SB	VD	
13082	1	FILTER - WATER SOFTENER TWIN	SB	VD	
(2) 22603	1	FILTER - RO SYSTEM STORAGE TANK RO20	SB	VD	
23355	1	FILTER - FILTRATION BOOSTER PUMP	SB	VD	
24272	1	FILTER - RO SYSTEM INSTALL KIT	SB	VD	
OTHER					
(2) 22224	1	WATER HEATER TANK ELECTRIC - 13.5KW	GC	GC	
SINK					
10116	2	SINK - RESTROOM WALL MOUNTED	SB	GC	
10549	1	SINK - RINSE DROP IN SST - 12X20IN 305X510MM	SB	GC	
10995	1	SINK - MOP - 24X24IN 610X610MM	SB	GC	
13264	1	SINK - 3 COMP WORK SST - 93IN 2350MM	SB	GC	
14688	1	SINK - HAND WITH SIDE SPLASH WALL MOUNTED SST	SB	GC	
18743	1	SINK - WATER FILLING STATION - 36X24IN 915X610MM	SB	GC	
22630	1	SINK - RINSE DROP IN - 27X26IN 685X670MM	SB	GC	
22768	2	SINK - COUNTERTOP RINSER WITH WATER TOWER - 26X9IN 660X235MM	SB	GC	
TOILET					
(2) 11871	2	TOILET - WITH TANK SINGLE FLUSH	GC	GC	WC TO BE PURCHASED THROUGH FERGUSON: NA.PROJECTS@FERGUSON.COM

WALL TREATMENT (AREA) SCHEDULE - "Q"

DESIGN ID	AREA	DESCRIPTION	FURN. BY	INST. BY	COMMENTS
PLASTIC					
23764	1093 SF	POLYWALL WALLCOVERING	GC	GC	
X9204	135 SF	FRP - BLACK	GC	GC	
TILE					
20229	489 SF	TILE - I COCCI - GRAPHITE - 6X24IN 150X600MM	SB	GC	GROUT: MAPEI - 10 BLACK, OR EQUAL
24599	329 SF	TILE - FLATIRON - OLIVIA - 2 3/8IN X 9 7/16IN 63MMX245MM	SB	GC	GROUT: MAPEI 5007 CHOCOLATE - 3/16"
WALL COVERING					
23815	231 SF	WALL COVERING - FOIL - CAVERN CLAY	SB	GC	A PREMIUM QUALITY PREMIXED FULL STRENGTH COMMERCIAL WALLCOVERING ADHESIVE SHOULD BE APPLIED ONLY TO THE FABRIC SIDE OF THE WALL COVERING. ECO-788 CLAY ADHESIVE OR ECO-888 CLEAR ADHESIVE BY ROMAN IS RECOMMENDED. WALLCOVERING REQUIRES THE USE OF A HEAVY DUTY, PREMIXED VINYL ADHESIVE. DILUTION OF ADHESIVE IS NOT RECOMMENDED. TO BE PROVIDED BY GC.
WALLCOVERING					
24762	133 SF	WALLCOVERING - CAMBRIAN - SLATE	SB	GC	
WOOD CLADDING					
X9201	313 SF	WOOD - WHITE OAK - PLANK - VERTICAL	SB	GC	WD0073 MAD100-V; PROVIDED BY CASEWORK VENDOR

WALL TREATMENT (LENGTH) SCHEDULE- "R"

DESIGN ID	LENGTH	DESCRIPTION	FURN. BY	INST. BY	COMMENTS
TRIM					
X9202	145' - 3 1/4"	SCHLUTER JOLLY TRIM ; BLACK	GC	GC	SEE DETAIL:6 & 8/I-502; FINISH: BLACK
X9203	38' - 4 7/8"	CUSTOM WOOD TRIM - WDOO73 - 1" X 1"	SB	GC	MOUNTED AT 7' - 0"AFF; SEE DETAIL: 6/A-503 PROVIDED BY CASEWORK VENDOR
(2) X9205	10' - 0"	FRY REGLET BLACK TRIM (WCTOSC)	SB	GC	LOCATED @ CAFE SEE DETAIL: 4/I107

RESPONSIBILITY LEGEND

FURN. BY	INST. BY
SB - FURNISHED BY STARBUCKS	GC - INSTALLED BY GENERAL CONTRACTOR
GC - FURNISHED BY GENERAL CONTRACTOR	SB - INSTALLED BY STARBUCKS
VD - FURNISHED BY VENDOR	VD - INSTALLED BY VENDOR

NOTE: ALL RESPONSIBILITIES TO BE CONFIRMED WITH STARBUCKS CONSTRUCTION MANAGER PRIOR TO ORDERING / CONSTRUCTION.

EXTERIOR SIGNAGE SCHEDULE - "S"

DESIGN ID	COUNT	DESCRIPTION	FURN. BY	INST. BY	COMMENTS
SIGNAGE - DISK					
13164	2	SIGN - DISK SF ILLUMINATED FLUSH MOUNTED EVOLVED - 60IN 1525MM	SB	VD	
SIGNAGE - DRIVE THRU					
22544	1	SIGN - DT CLEARANCE BAR SQUARE FRAME FREESTANDING - BLACK AND DARK GREEN	SB	VD	FOOTING (GC), SIGN (VD); SEE DETAIL: 2 & 3/APX-104
23074	1	SIGN - DIRECTIONAL EXIT ONLY ILLUM DS - NEW FOUNDATION - 44IN 1120MM	SB	VD	SEE DETAIL: 5 & 6/APX-104
23083	3	SIGN - DT DIRECTIONAL ARROW ILLUM DS - NEW FOUNDATION - 44IN 1120MM	SB	VD	SEE DETAIL: 4 & 6/APX-104
SIGNAGE - OTHER					
21297	2	SIGN - 5 MINUTE PARKING	SB	VD	POST, IF REQUIRED, PROVIDED BY OTHERS
SIGNAGE - PYLON DISK					
13187	1	SIGN - PYLON DISK DRIVE THRU DF ILLUMINATED EVOLVED - 108IN 2745MM	SB	VD	
SIGNAGE - WORDMARK					
18506	1	SIGN - WORDMARK STARBUCKS ON RACEWAY - 18IN 455MM	SB	VD	WHITE LETTERS

FLOOR TREATMENT SCHEDULE - "T"

DESIGN ID	AREA	DESCRIPTION	FURN. BY	INST. BY	COMMENTS
TILE					
(2) 19795	911 SF	POLYVINYL FLOOR SHEET - ECO-GRIP - PEWTER - 60X96IN 1524X2438MM	GC	GC	
20230	1319 SF	TILE - I COCCI - GRAPHITE - 24X24IN 600X600MM	SB	GC	GROUT: MAPEI - 10 BLACK
WALK OFF MAT					
19288	39 SF	WALK OFF MAT - HELIX Z1 - BLACK - 12X9IN 305X230MM	SB	GC	PAINT CONCRETE FLOOR UNDER WALK-OFF MAT WITH BLACK PAINT

CEILING TREATMENT SCHEDULE - "U"

DESIGN ID	AREA	DESCRIPTION	FURN. BY	INST. BY	COMMENTS
OTHER					
11302	390 SF	ACT - WHITE - 2X4FT 61X122CM	GC	GC	VINYL CLAD AT BOH
(2) 19734	63 SF	ACT - ULTIMA - 2X2FT 61X61CM	GC	GC	FACTORY FINISHED SW7032 WARM STONE IN DT AREA AND WORKROOM; FOR ORDERING CONTACT DEB PICKENS AT DPLPICKENS@ARMSTRONGCEILINGS.COM, PH: 480-695-9053
X9301	92 SF	CIRRUS SECOND LOOK CEILING - 2X4FT 61X122CM LINEAR PANELS (III PANEL SCORING CREATES NOMINAL 8INX4FT)	GC	GC	PROVIDED BY: ARMSTRONG; FACTORY FINISHED BY MANUFACTURER TO MATCH SW7031-ES

WINDOW SCHEDULE - "W"

DESIGN ID	COUNT	DESCRIPTION	FURN. BY	INST. BY	COMMENTS
WINDOW					
10118	1	WINDOW - DT HURRICANE RATED - 48X44IN 1205X1105MM - ALUMINUM	EXIST	EXIST	LL TO SPECIFY IMPACT GLASS OR NON-IMPACT GLASS AS REQUIRED. CONTACT DAN RADEK AT dan@ready-access.com 1-800-621-5045

SITE SCHEDULE - "Y"

DESIGN ID	COUNT	DESCRIPTION	FURN. BY	INST. BY	COMMENTS
EXTERIOR MENU					
22540	1	MENU BOARD - DT 5 PANEL SQUARE FRAME FREESTANDING - 95X62IN 2415X1575MM - BLACK	SB	VD	SEE DETAIL: 2 & 4/APX-103
22542	1	MENU BOARD - DT PRE MENU SQUARE FRAME FREESTANDING - 29X61IN 735X1550MM - BLACK	SB	VD	SEE DETAIL: 5 & 6/APX-103
22546	1	MENU BOARD - DT DIGITAL ORDER SCREEN WITH POST - BLACK	SB	VD	SEE DETAIL: 1/APX-003.2
FENCE AND RAILING					
21486	25	FENCE MESH - 54IN 1370MM	EXIST	EXIST	SEE DETAIL: 2 & 3/APX-105
OTHER					
10042	2	BIKE RACK HOOP	EXIST	EXIST	SEE DETAIL: 7 & 8/APX-104
10163	1	DT WINDOW SHELF - 56IN OBSIDIAN PAPERSTONE	EXIST	EXIST	SEE DETAIL: 4/APX-103.1
22543	1	DT ORDER POINT CANOPY SQUARE FRAME - BLACK	SB	VD	SEE DETAIL: 2/APX-103.2
23113	1	GROUND GRAPHICS DT ENTRY STENCIL	EXIST	EXIST	SEE DETAIL: 2/APX-104.1
23115	1	GROUND GRAPHICS DO NOT ENTER STENCIL	EXIST	EXIST	SEE DETAIL: 1/APX-104.1
23117	19	GROUND GRAPHICS ARROW STENCIL	EXIST	EXIST	SEE DETAIL: 9/APX-104
X4001	4	CIRCULAR BOLLARD - 6" DIA	EXIST	EXIST	SEE DETAIL: 1/APX-104

FOR CONSTRUCTION

© 2019 STARBUCKS COFFEE COMPANY

STARBUCKS®
2401 UTAH AVENUE SOUTH
SEATTLE, WASHINGTON 98134
(206) 318-1575

THESE DRAWINGS AND THE PROJECT MANUAL ARE CONFIDENTIAL AND SHALL REMAIN THE SOLE PROPERTY OF STARBUCKS CORPORATION, WHICH IS THE OWNER OF THE COPYRIGHT IN THIS WORK. THEY SHALL NOT BE REPRODUCED (IN WHOLE OR IN PART), SHARED WITH THIRD PARTIES OR USED IN ANY MANNER ON OTHER PROJECTS OR EXTENSIONS TO THIS PROJECT WITHOUT THE PRIOR WRITTEN CONSENT OF STARBUCKS CORPORATION. THESE DRAWINGS AND SPECIFICATIONS ARE INTENDED TO EXPRESS DESIGN INTENT FOR A PROTOTYPICAL STARBUCKS STORE (WHICH IS SUBJECT TO CHANGE AT ANYTIME) AND DO NOT REFLECT ACTUAL SITE CONDITIONS. NEITHER PARTY SHALL HAVE ANY OBLIGATION NOR LIABILITY TO THE OTHER (EXCEPT STATED ABOVE) UNTIL A WRITTEN AGREEMENT IS FULLY EXECUTED BY BOTH PARTIES.

STARBUCKS TEMPLATE VERSION: i2021-09-13

Design Forum Architects Inc.
2056 Byers Rd
Miamisburg, OH 45342
Tel: (844) 804-7700
Donald J. Rethman
Architect In Charge
License: AR0017303

Design Forum Engineering
2056 Byers Rd
Miamisburg, OH 45342
Tel: (844) 804-7700
Timothy L. Raberding, PE
Professional Engineer
License: 62078

PROJECT NAME:
US 98 & GRIFFIN RD

PROJECT ADDRESS:
3105 US-98 NORTH
LAKELAND, FLORIDA 33801

STORE #:	80004
PROJECT #:	96892-001
ISSUE DATE:	2025-10-10
DESIGNER:	ASHLEY SUEIRAS
PRODUCTION DESIGNER:	ANDY MCLOUD
CHECKED BY:	DONALD RETHMAN

Revision Schedule

Rev	Date	By	Description
1	08/26/25		REV-1
2	08/26/25		REV-2

SHEET TITLE:
SCHEDULES

SCALE: NO SCALE

SHEET NUMBER:
I-603

10/9/2025 9:55:30 AM C:\Users\julia.gray\Documents\96892-001_80004_US 98 & Griffin Rd, FL_2025_Julia.grayFRYY6.rvt

ABBREVIATIONS

3PL	THIRD PARTY LOGISTICS
AFF	ABOVE FINISHED FLOOR
AHJ	AUTHORITIES HAVING JURISDICTION
APPROX	APPROXIMATE
BLDG	BUILDING
CBL	COLD BEVERAGE LINE
CLG	CEILING
CONST	CONSTRUCTION
CW	DOMESTIC COLD WATER
CXA	COMMISSIONING AGENT
DEG	DEGREES
DN	DOWN
DTL	DETAIL
DWG(S)	DRAWING(S)
EA	EACH
EC	ELECTRICAL CONTRACTOR
ELEC	ELECTRICAL
EM	EMERGENCY
(E)OR(EX)	EXISTING
EXT	EXTERIOR
FD	FLOOR DRAIN
FS	FLOOR SINK
F&I	FURNISH & INSTALL
FLR	FLOOR
FT	FOOT/FEET
FCO	FLOOR CLEANOUT
FW	FILTERED COLD WATER
GC	GENERAL CONTRACTOR
GFCI	GROUND FAULT CIRCUIT INTERRUPTER
GW	GREASE WASTE
HR	HOUR
HVAC	HEATING, VENTILATION, AND AIR CONDITIONING
HW	HOT WATER
HS	HANDSINK
HWS	HOT WATER SUPPLY
HWR	HOT WATER RETURN
IW	INDIRECT WASTE
LL	LANDLORD
MAX	MAXIMUM
MC	MECHANICAL CONTRACTOR
MDP	MAIN DISTRIBUTION PANEL
MECH	MECHANICAL
MEP	MECHANICAL, ELECTRICAL, AND PLUMBING
MFG	MANUFACTURER
MIN	MINIMUM
MS	MOP SINK
NL	NIGHTLIGHT
NTS	NOT TO SCALE
PC	PLUMBING CONTRACTOR
PS	PREP SINK
POC	POINT OF CONNECTION
PM	PROJECT MANAGER
REF	REFERENCE
REQ'D	REQUIRED
REV	REVISION
SAN	SANITARY WASTE
SB	STARBUCKS
SHT	SHEET
SF	SQUARE FEET
SPECS	SPECIFICATION(S)
SST	STAINLESS STEEL
TEL	TELEPHONE
TEMP	TEMPORARY
TMV	TEMPERATURE MIXING VALVE
TW	TEMPERED HOT WATER
TYP	TYPICAL
UNO	UNLESS NOTED OTHERWISE
V	VENT
VD	VENDOR
WCO	WALL CLEANOUT
WH	WATER HEATER
WP	WEATHER PROOF

PLUMBING SYMBOL LEGEND

SAN	SAN	SANITARY OR WASTE PIPING BELOW SLAB
VENT	V	VENT PIPING
GW	GW	GREASE WASTE
IW	IW	INDIRECT WASTE
CW	CW	COLD WATER PIPING
HW	HW	HOT WATER PIPING
HWR	HWR	HOT WATER RETURN PIPING
FW	FW	COLD WATER FILTERED
CSW	CWS	COLD WATER SOFTENED
TW	TW	TEMPERED WATER
GAS	GAS	GAS PIPING
	BV	BALL VALVE
	GV	GATE VALVE
	CH. V	CHECK VALVE
		SHOCK ABSORBER
	FCO	FLOOR CLEANOUT
	WCO	WALL CLEANOUT
	HB	HOSE BIBB
	RV	RELIEF VALVE
		STRAINER
	FD	EMERGENCY FLOOR DRAIN
	FS	FLOOR SINK
BFP	BFP	BACKFLOW PREVENTER
M	WM	WATER METER
	POC	CONNECT TO EXISTING

PIPING

SOIL, WASTE, AND VENT PIPING

CAST IRON
NO-HUB CAST IRON PIPE AND FITTINGS MAY BE USED ABOVEGROUND FOR WASTE AND VENT PIPING. HUB AND SPIGOT CAST IRON PIPE MAY BE USED UNDERGROUND FOR WASTE AND VENT PIPING. NO-HUB CAST IRON WASTE, AND VENT PIPING AND FITTINGS 1-1/2" AND LARGER SHALL CONFORM TO ASTM A-888. HUB AND SPIGOT CAST IRON WASTE AND VENT PIPING AND FITTINGS 2" DIAMETER AND LARGER SHALL CONFORM TO ASTM A74 AND ASTMC564 GASKETED JOINTS.

ABS
ABS PIPE AND FITTINGS MAY BE USED FOR ABOVEGROUND AND UNDERGROUND WASTE AND VENT PIPING. SOLID WALL ABS PIPING SHALL CONFORM TO NSF 14 AND ASTM D 2661. SCHEDULE 40. FITTINGS SHALL CONFORM TO NSF 14, ASTM D2661, AND ASTM D3311.

PVC
PVC PIPE AND FITTINGS MAY BE USED FOR ABOVEGROUND AND UNDERGROUND WASTE AND VENT PIPING. SOLID WALL PVC PIPING SHALL CONFORM WITH NSF 14 AND ASTM D2665, SCHEDULE 40. FITTINGS SHALL CONFORM WITH NSF 14, ASTM D2665, AND ASTM D3311.

UNDERGROUND WASTE PIPE ONLY
WHERE PERMITTED BY AHJ FOAM CORE PVC SCHEDULE 40 CONFORMING WITH NSF 14 AND ASTM F891.

COPPER
WASTE AND VENT PIPING SMALLER THAN 1-1/2" SHALL BE TYPE "M" COPPER AND CONFORM TO ASTM B306. SOLDER FILLER METALS: ASTM B32, LEAD FREE ALLOYS.

PIPING ALIGNMENT SHALL BE AS INDICATED ON THE DRAWINGS USING APPROVED WYE BRANCHES OR EIGHT-BENDS FOR DIRECTION CHANGES AND SHALL BE SURELY SUPPORTED OR SECURED TO MAINTAIN SUCH ALIGNMENT. INDIRECT WASTE PIPING FROM FIXTURES CAPABLE OF DISCHARGING WASTE 120°F AND GREATER SHALL BE TYPE M COPPER.

DOMESTIC WATER PIPING

DOMESTIC WATER PIPING ABOVE GROUND:
HARD COPPER TUBE, ASTM B88, TYPE L; WROUGHT-COPPER, SOLDER-JOINT FITTINGS; AND SOLDERED JOINTS. SOLDER FILLER METALS: ASTM B32, LEAD-FREE ALLOYS. FLUX: ASTM B813, WATER FLUSHABLE. CPVC SCHEDULE 80 NSF SE8459, ASTM D1784 IS APPROVED FOR INTERIOR WATER PIPING. TYPE "L"; COPPER PRESSURE-SEAL JOINT; AND PRESSURE-SEAL JOINT SYSTEMS.

DOMESTIC WATER PIPING BELOW GROUND:
HARD COPPER TUBE, ASTM B88, TYPE K; WROUGHT-COPPER, SOLDER-JOINT FITTINGS; AND SOLDERED JOINTS. SOLDER FILLER METALS: ASTM B32, LEAD-FREE ALLOYS. FLUX: ASTM B813, WATER FLUSHABLE. PROVIDE INSULATION ON COPPER TUBING BELOW GRADE. REFERENCE SECTION 22 07 19. CPVC SCHEDULE 80 NSF SE8459, ASTM D1784 IS APPROVED FOR UNDERGROUND WATER PIPING.

CATHODIC PROTECTION
PROVIDE DIELECTRIC INSULATION AT POINTS WHERE COPPER OR BRASS PIPE COMES IN CONTACT WITH FERROUS PIPING, REINFORCING STEEL OR OTHER DISSIMILAR METAL IN STRUCTURE.

CONDENSATE DRAINAGE PIPING

ABS
ABS PIPE AND FITTINGS MAY BE USED FOR ABOVEGROUND AND UNDERGROUND WASTE AND VENT PIPING. SOLID WALL ABS PIPING SHALL CONFORM TO NSF 14 AND ASTM D 2661, SCHEDULE 40. FITTINGS SHALL CONFORM TO NSF 14, ASTM D2661, AND ASTM D3311.

PVC
PVC PIPE AND FITTINGS MAY BE USED FOR ABOVEGROUND AND UNDERGROUND WASTE AND VENT PIPING. SOLID WALL PVC PIPING SHALL CONFORM WITH NSF 14 AND ASTM D2665, SCHEDULE 40. FITTINGS SHALL CONFORM WITH NSF 14, ASTM D2665, AND ASTM D3311.

COPPER
WASTE AND VENT PIPING SMALLER THAN 1-1/2" SHALL BE TYPE "M" COPPER AND CONFORM TO ASTM B306. SOLDER FILLER METALS: ASTM B32, LEAD FREE ALLOYS.

PIPING ALIGNMENT SHALL BE AS INDICATED ON THE DRAWINGS USING APPROVED WYE BRANCHES OR EIGHT-BENDS FOR DIRECTION CHANGES AND SHALL BE SURELY SUPPORTED OR SECURED TO MAINTAIN SUCH ALIGNMENT. INDIRECT WASTE PIPING FROM FIXTURES CAPABLE OF DISCHARGING WASTE 120°F AND GREATER SHALL BE TYPE M COPPER.

PIPING

CONNECTIONS
INSTALL UNIONS ADJACENT TO EACH VALVE AND AT FINAL CONNECTION TO EACH PIECE OF EQUIPMENT. INSTALL DIELECTRIC COUPLINGS TO CONNECT PIPING MATERIALS OF DISSIMILAR METALS. SCREW JOINT STEEL PIPING UP TO AND INCLUDING 1-1/2" (38MM) FOR GAS PIPING. USE NON-LEAD, NON-ANTIMONY SOLDER FOR SOLDERING DOMESTIC WATER COPPER PIPE.

CLEANOUTS
PROVIDE FLOOR AND WALL CLEANOUTS AS INDICATED ON THE DRAWINGS OR WHERE REQUIRED BY CODE IN ALL SOIL, WASTE, AND DRAIN LINES. IN AREAS WITH CERAMIC TILE OR CARPETED FLOORING, PROVIDE CLEANOUTS WITH SQUARE, ADJUSTABLE, NICKEL BRONZE TOP. IN AREAS WITH RESILIENT (VINYL) FLOORING, PROVIDE CLEANOUTS WITH SQUARE, ADJUSTABLE, NICKEL BRONZE TOP WITH TILE RECESS. CLEANOUTS SHALL BE SAME SIZE AS PIPE EXCEPT THAT CLEANOUTS LARGER THAN 4" WILL NOT BE REQUIRED. WHERE CLEANOUTS OCCUR IN WALLS OF FINISHED AREAS, THEY SHALL BE CONCEALED BEHIND CHROME PLATED ACCESS COVERS.

PIPING SYSTEMS REQUIRING INSULATION
INSULATE DOMESTIC COLD WATER PIPING, ASSOCIATED FITTINGS AND VALVES WITH FLEXIBLE ELASTOMERIC 1/2" WALL THICKNESS INSULATION. INSULATE DOMESTIC HOT WATER PIPING, ASSOCIATED FITTINGS AND VALVES WITH 1" THICK FLEXIBLE ELASTOMERIC, 1-1/2" THICK FIBERGLASS INSULATION OR PER LOCAL ENERGY CODE, WHICHEVER GREATER. INSULATE DOMESTIC HOT WATER RETURN PIPING, ASSOCIATED FITTINGS AND VALVES WITH 1" WALL THICKNESS INSULATION OR PER LOCAL ENERGY CODE, WHICHEVER GREATER. INSULATE DOMESTIC SUPPLY PIPING UNDERGROUND, BELOW SLAB, AND WITHIN AREAS SUBJECT TO FREEZING WITH MOISTURE RESISTANT CLOSED-CELL ELASTOMERIC FOAM. (NEED TO DETERMINE MINIMUM THICKNESS PER WATER TEMPERATURE.) INSULATE WASTE PIPING ABOVE CEILINGS THAT RECEIVE CONDENSATE WITH 1/2" WALL THICKNESS INSULATION. INSULATE WASTE AND VENT PIPING LOCATED WITHIN AREAS SUBJECT TO FREEZING. INSULATE EXPOSED SANITARY DRAINS, DOMESTIC WATER, DOMESTIC HOT WATER, AND STOPS FOR PLUMBING FIXTURES FOR PEOPLE WITH DISABILITIES.
FLEXIBLE ELASTOMERIC INSULATION
CLOSED-CELL, SPONGE- OR EXPANDED-RUBBER MATERIALS. COMPLY WITH ASTM C 534, TYPE I FOR TUBULAR MATERIALS AND TYPE II FOR SHEET MATERIALS. ADHESIVES, SEALERS, AND PROTECTIVE FINISHES: AS RECOMMENDED BY INSULATION MANUFACTURER FOR APPLICATIONS INDICATED. MANUFACTURERS: SUBJECT TO COMPLIANCE WITH REQUIREMENTS, AVAILABLE PRODUCTS THAT MAY BE INCORPORATED INTO THE WORK INCLUDE, AND ARE LIMITED TO, THE FOLLOWING: AEROFLEX USA, INC.; AEROCEL., ARMACELL LLC; AP ARMAFLEX., K-FLEX USA; INSUL-LOCK, INSUL-TUBE, AND K-FLEX LS.

FIBERGLASS INSULATION
FIBERGLASS PIPING INSULATION: ASTM C 547, CLASS 1 ENCASE PIPE FITTINGS INSULATION WITH ONE-PIECE PRE-MOLDED PVC FITTING COVERS. VAPOR BARRIER MATERIAL: PAPER-BACKED ALUMINUM FOIL, EXCEPT AS OTHERWISE INDICATED, STRENGTH AND PERMEABILITY RATING EQUIVALENT TO ADJOINING PIPE INSULATION JACKETING. STAPLES, BANDS, WIRES, AND CEMENT: AS RECOMMENDED BY INSULATION MANUFACTURER FOR APPLICATIONS INDICATED. ADHESIVES, SEALERS, AND PROTECTIVE FINISHES: AS RECOMMENDED BY INSULATION MANUFACTURER FOR APPLICATIONS INDICATED. MANUFACTURERS: SUBJECT TO COMPLIANCE WITH REQUIREMENTS, AVAILABLE PRODUCTS THAT MAY BE INCORPORATED INTO THE WORK INCLUDE, AND ARE LIMITED TO, THE FOLLOWING: ARMSTRONG WORLD INDUSTRIES, INC., OWENS-CORNING FIBERGLASS CORP., KEENE CORP., CERTAINTEED., JOHNS MANVILLE.

ADHESIVES
MATERIALS SHALL BE COMPATIBLE WITH INSULATION MATERIALS, JACKETS, AND SUBSTRATES AND FOR BONDING INSULATION TO ITSELF AND TO SURFACES TO BE INSULATED, UNLESS OTHERWISE INDICATED. INSULATION FOR HANDICAP ACCESSIBLE FIXTURES ALL HANDICAP LAVATORY P-TRAP AND ANGLE STOP ASSEMBLIES SHALL BE INSULATED WITH TRAP WRAP PROTECTIVE KIT MANUFACTURED BY PROFLO MODEL PF202WH OR EQUAL. ABRASION RESISTANT, ANTI-MICROBIAL VINYL EXTERIOR COVER SHALL BE SMOOTH. FOR TRAPS, THE INSULATION SHALL HAVE A CLEANOUT NUT CAP TO ALLOW SERVICE TO THE TRAP WITHOUT DISASSEMBLY. FOR STOPS, THE INSULATION SHALL HAVE A LOCK LID THAT PREVENTS TAMPERING BUT ALLOWS ACCESS WITHOUT REMOVAL OF THE INSULATION. FASTENERS SHALL REMAIN SUBSTANTIALLY OUT OF SIGHT. MANUFACTURERS: SUBJECT TO COMPLIANCE WITH REQUIREMENTS: PROFLO, TRUEBRO, PLUMBEREX.

GENERAL
INSULATION SHALL BE LISTED AND LABELED PER ASTM E 84 FOR PLENUM INSTALLATIONS EMPLOYING SLIP ON TECHNIQUES.

TESTING
ALL PIPES SHALL BE TESTED BY AN APPROVED METHOD BEFORE THEY ARE BACKFILLED OR CONCEALED. AFTER TESTING IS COMPLETE, THE PLUMBING CONTRACTOR SHALL DISINFECT THE POTABLE WATER SYSTEM AS REQUIRED BY LOCAL AUTHORITY. TEST WATER PURITY ACCORDING TO LOCAL REQUIREMENTS AND SUBMIT CERTIFIED TEST RESULTS TO ENGINEER FOR REVIEW AND APPROVAL.

IDENTIFICATION
PROVIDE PIPE IDENTIFICATION EVERY 10 FEET (EXCEPT WHERE PIPES ARE EXPOSED TO PUBLIC) IN ACCORDANCE WITH SPECIFICATIONS.

GENERAL PLUMBING NOTES

1. EXPOSED/SURFACE MOUNTED PIPING IS ONLY ALLOWED IN THE BAR AREA UNDER COUNTERTOPS, WHERE IT DOES NOT OBSTRUCT CABINETS/DEVICES, AND WHERE APPROVED BY STARBUCKS CONSTRUCTION MANAGER. IF ROUTED THROUGH CABINETS, IT SHALL BE ROUTED TO MAXIMIZE STORAGE SPACE AND BE PROTECTED FROM DAMAGE.
2. CONTRACTOR TO VERIFY ALL DIMENSIONS, INCLUDING CLEARANCES REQUIRED BY OTHER TRADES, AND NOTIFY STARBUCKS CONSTRUCTION MANAGER OF ANY DISCREPANCIES PRIOR TO PROCEEDING WITH THE WORK. ALL DIMENSIONS ARE TO THE FACE OF THE FINISHED SURFACE UNLESS NOTED OTHERWISE. ALL DIMENSIONS TO BE TAKEN FROM FROM ACTUAL BUILDING DIMENSIONS.
3. THE PLUMBING CONTRACTOR SHALL COORDINATE PLUMBING WORK WITH OTHER TRADES. THE ARCHITECTURAL DRAWINGS SHALL TAKE PRECEDENCE OVER ALL OTHER DRAWINGS. SEE ARCHITECTURAL DRAWINGS FOR FIXTURES IN CASEWORK AND PLUMBING DETAILS.

LANDLORD REQUIREMENTS

PRIOR TO BID
THE CONTRACTOR SHALL UNDERSTAND AND COMPLY WITH ALL LANDLORD CONSTRUCTION REQUIREMENTS. IF LANDLORD REQUIREMENTS CONFLICT WITH REQUIREMENTS IN THESE PLANS, THE MORE STRINGENT REQUIREMENTS SHALL GOVERN.

2

GENERAL NOTES

SITE EXAMINATION
THE CONTRACTOR SHALL THOROUGHLY EXAMINE ALL AREAS WHERE FIXTURES, EQUIPMENT, AND PIPING WILL BE INSTALLED AND WILL REPORT ANY CONDITION THAT, IN HIS OPINION, PREVENTS THE PROPER INSTALLATION OF THE PLUMBING WORK.

STANDARDS
EQUIPMENT AND MATERIALS SHALL CONFORM WITH THE APPROPRIATE PROVISIONS OF CSA, ULC, ASME, ASTM, UL, NEMA, ANSI, ASHRAE, NFPA, AS APPLICABLE TO EACH INDIVIDUAL UNIT OR ASSEMBLY.

CODES
ALL WORK SHALL BE PERFORMED IN STRICT ACCORDANCE WITH ALL APPLICABLE PROVINCIAL AND LOCAL CODES AND ORDINANCES. IN CASE OF CONFLICT BETWEEN THE DRAWINGS AND SPECIFICATIONS AND THE CODES AND ORDINANCES, THE HIGHEST STANDARD SHALL APPLY. CONTRACTOR SHALL SATISFY CODE REQUIREMENTS AS A MINIMUM STANDARD WITHOUT ANY EXTRA COST TO STARBUCKS.

PERMITS AND FEES
THE CONTRACTOR SHALL PROCURE AND PAY FOR ALL PERMITS, FEES, AND INSPECTIONS NECESSARY TO COMPLETE THE PLUMBING WORK.

WARRANTY
THE CONTRACTOR SHALL UNCONDITIONALLY WARRANT ALL WORK TO BE FREE OF DEFECTS IN MATERIAL AND WORKMANSHIP FOR A PERIOD OF ONE (1) YEAR FROM THE DATE OF FINAL ACCEPTANCE BY STARBUCKS AND WILL REPAIR OR REPLACE ANY DEFECTIVE WORK PROMPTLY AND WITHOUT CHARGE AND RESTORE ANY OTHER EXISTING WORK DAMAGED IN THE COURSE OF REPAIRING DEFECTIVE MATERIALS AND WORKMANSHIP.

LEED
ALL WORK, MATERIALS AND EQUIPMENT SHALL MEET LEED REQUIREMENTS & CODE. IN CASE OF CONFLICT, THE HIGHER STANDARD SHALL APPLY.

PLUMBING FIXTURES

WATER FILTRATION
STARBUCKS WATER FILTRATION VENDOR WILL FURNISH FILTRATION SYSTEM.
GENERAL CONTRACTOR SHALL CONFIRM WITH STARBUCKS CONSTRUCTION MANAGER WHETHER VENDOR OR PLUMBING CONTRACTOR SHALL INSTALL FILTRATION SYSTEM.

WATER HAMMER ARRESTORS
PROVIDE WATER HAMMER ARRESTOR IN DOWNFEED PIPE TO ALL WATER CLOSETS AND QUICK-ACTING VALVES. PROVIDE WATER HAMMER ARRESTOR AT END OF COLD WATER, COLD SOFTENED WATER, AND FILTERED WATER BRANCHES. SEE PDI WH-201 SIZING CHART ON SHEET P111.

CONNECTIONS
THE PLUMBING CONTRACTOR SHALL MAKE ALL FINAL CONNECTIONS TO EQUIPMENT INCLUDING REQUIRED MATERIAL SUCH AS PIPING, VALVES, FILTERS, TRAPS, CHECKS VALVES, VACUUM BREAKERS, AND FLEXIBLE AND RIGID TUBING.

PROVIDE AND COORDINATE LINE VOLTAGE WIRING, LINE VOLTAGE CONTROL AND INTERLOCK WIRING FOR MECHANICAL SYSTEMS, AND LOW VOLTAGE CONTROL WIRING. FURNISH WIRING DIAGRAMS TO THE ELECTRICAL CONTRACTOR AS REQUIRED FOR PROPER EQUIPMENT INSTALLATION. COORDINATE ACTUAL WIRE SIZING AMPS FOR PLUMBING EQUIPMENT (FROM THE EQUIPMENT NAMEPLATE) WITH THE ELECTRICAL CONTRACTOR TO ENSURE PROPER INSTALLATION.

PLUMBING SCOPE OF WORK SUMMARY

THE FOLLOWING SCOPE OF WORK IS BASED ON THE LANDLORD'S WORKLETTER EXHIBIT C. THE GENERAL CONTRACTOR SHALL REFERENCE THE COMPLETE WORK LETTER FOR A MORE DETAILED DESCRIPTION OF WORK BY BOTH PARTIES. ANY QUESTIONS REGARDING SCOPE SHALL BE BROUGHT TO STARBUCKS ATTENTION FOR CLARIFICATION. RESPONSIBILITY INDICATED BELOW MEANS FURNISHED, PERMITTED AND INSTALLED BY THE PARTY INDICATED.

WORK DESCRIPTION	RESPONSIBILITY	
	LANDLORD	STARBUCKS
WATER SERVICE AND METER	X	
BOOSTER PUMP FOR WATER SERVICE	X	
BELOW FLOOR/ SLAB WASTE, VENT AND WATER PIPES		X
ABOVE FLOOR/ SLAB WASTE, VENT AND WATER PIPES		X
PLUMBING VENT(S) THROUGH ROOF	X	
EXTERIOR HOSE BIBB(S)	X	
BASE COVERAGE SPRINKLER SYSTEM	X	
SPRINKLER SYSTEM MODIFICATION FOR TENANT BUILDOUT	X	
EXTERIOR GREASE INTERCEPTOR	X	

FOR CONSTRUCTION

© 2019 STARBUCKS COFFEE COMPANY

STARBUCKS®
2401 UTAH AVENUE SOUTH
SEATTLE, WASHINGTON 98134
(206) 318-1575

THESE DRAWINGS AND THE PROJECT MANUAL ARE CONFIDENTIAL AND SHALL REMAIN THE SOLE PROPERTY OF STARBUCKS CORPORATION. WHICH IS THE OWNER OF THE COPYRIGHT IN THIS WORK. THEY SHALL NOT BE REPRODUCED (IN WHOLE OR IN PART), SHARED WITH THIRD PARTIES OR USED IN ANY MANNER ON OTHER PROJECTS OR EXTENSIONS TO THIS PROJECT WITHOUT THE PRIOR WRITTEN CONSENT OF STARBUCKS CORPORATION. THESE DRAWINGS AND SPECIFICATIONS ARE INTENDED TO EXPRESS DESIGN INTENT FOR A PROTOTYPICAL STARBUCKS STORE (WHICH IS SUBJECT TO CHANGE AT ANYTIME) AND DO NOT REFLECT ACTUAL SITE CONDITIONS. NEITHER PARTY SHALL HAVE ANY OBLIGATION NOR LIABILITY TO THE OTHER (EXCEPT STATED ABOVE) UNTIL A WRITTEN AGREEMENT IS FULLY EXECUTED BY BOTH PARTIES.

STARBUCKS TEMPLATE VERSION: i2021-09-13

Design Forum Architects Inc.
2056 Byers Rd
Miamisburg, OH 45342
Tel: (844) 804-7700
Donald J. Rethman
Architect In Charge
License: AR00017303

Design Forum Engineering
2056 Byers Rd
Miamisburg, OH 45342
Tel: (844) 804-7700
Timothy L. Raberding, PE
Professional Engineer
License: 62078

PROJECT NAME:
US 98 & GRIFFIN RD

PROJECT ADDRESS:
3105 US-98 NORTH
LAKELAND, FLORIDA 33801

STORE #: 80004
PROJECT #: 96892-001
ISSUE DATE: 2025-09-26
DESIGN MANAGER: ASHLEY ASUEIRAS
PRODUCTION DESIGNER: ANDY MCLOUD
CHECKED BY: DONALD RETHMAN

Revision Schedule

Rev	Date	Description
2	10/3/25	Revision 2

SHEET TITLE:
PLUMBING NOTES

SCALE:

SHEET NUMBER:
P001

10/9/2025 10:47:48 AM Autodesk Docs://US 98 and Griffin - Starbucks/TI_US 98 & Griffin Rd-MEP_R25_permit.rvt

WATER HAMMER ARRESTOR SIZING CHART		
FIXTURE UNIT RATING	PDI SIZE	CONNECTION TO SUPPLY LINE
1-11	A	3/4"
12-32	B	1"
33-60	C	1"
61-113	D	1 1/4"
114-154	E	1 1/2"
155-330	F	2"

REFERENCE PDI-WH-201.

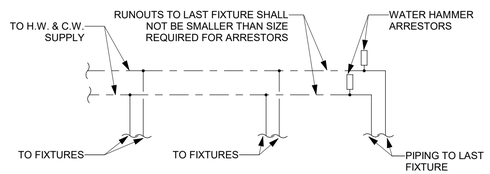

1 WATER HAMMER ARRESTOR
N.T.S.

GENERAL NOTES

A. FURNISH AND INSTALL A COMPLETE AND OPERATING SYSTEM. ALL ITEMS ARE NOT NECESSARILY SHOWN.

B. PLUMBING CONTRACTOR RESPONSIBLE FOR SITE INVESTIGATION PRIOR TO START OF WORK TO REVEAL FULL SCOPE OF WORK.

C. COORDINATE WITH ELECTRICAL CONTRACTOR FOR POWER CONNECTION TO ALL PLUMBING EQUIPMENT.

D. SEE ARCHITECTURE DRAWINGS FOR DIMENSIONS.

E. REFER TO DETAIL SHEETS FOR PLUMBING FITTINGS LOCATED IN CASEWORK.

F. COLD WATER SUPPLY LINES INSIDE CASEWORK AND BAR AREA TO BE COVERED WITH 1/2" THICK SELF SEALING, SECTIONAL CLOSED-CELL FOAM INSULATION. REFER TO SHEET P002 FOR HOT WATER SUPPLY LINE INSULATION REQUIREMENTS.

G. CONTRACTOR SHALL CONTACT WATER FILTER SUPPLIER 10 DAYS(MINIMUM) BEFORE THE TIME THAT THE FILTER SYSTEM IS TO BE STARTED UP.

	SHEET NOTE # REFERENCE	BACKFLOW PREVENTER (BFP) REQUIRED	WATER HAMMER ARRESTOR (WHA) REQUIRED +
ICE MACHINE	6	YES	YES
BREWER	8	YES	YES
ESPRESSO	9	YES	YES
PITCHER RINSER	17	YES	-
RINSE FAUCET	15	YES	-
INSTAHOT	11	-	YES
WATER TOWER	12	-	YES
WATER CLOSET	13	-	YES
FILTRATION EQUIP	3	YES	-

+ SEE WATER HAMMER ARRESTOR SIZING CHART ON THIS SHEET.

KEYED NOTES

1 PIPE 3/4" COLD SOFTENED WATER TO WATER HEATER. PIPE 1-1/2" HOT WATER FROM WATER HEATER. WATER HEATER AS SPECIFIED ON SHEET P601. REFER TO WATER HEATER DETAIL ON SHEET P501.

2 1/2" HOT WATER AND 1/2" COLD WATER TO FAUCET WITH INTEGRAL ASSE 1001 ATMOSPHERIC VACUUM BREAKER AT MOP SINK. CAULK AND SEAL BACK OF SINK TO WALL.

3 1" CITY COLD WATER WITH ASSE 1022 DOUBLE CHECK VALVE WITH ATMOSPHERIC VENT TO FILTRATION EQUIPMENT WITH 1" FILTERED WATER AND 3/4" COLD SOFTENED WATER OUT. PLUMBING CONTRACTOR TO FOLLOW MANUFACTURER'S INSTALLATION INSTRUCTIONS AND ACTIVATION PROCEDURES FOR BOTH SYSTEMS. REFER TO FILTER CONNECTION DETAIL ON SHEET P501.

4 1/2" HOT WATER AND 1/2" COLD WATER TO FAUCET AND SPRAY AT THREE COMPARTMENT SINK. CAULK AND SEAL BACK OF SINK TO WALL.

5 1/2" COLD SOFTENED WATER WITH INTEGRAL ASSE 1001 ATMOSPHERIC VACUUM BREAKER TO DISHWASHER. INSTALL SHUT-OFF WITH 3/4" MALE HOSE-END FITTING @ 18" AFF UNDER COMPARTMENT SINK. SHUT-OFF TO INCLUDE PRESSURE REDUCING VALVE, PRESSURE GAUGE (SET @ 20 PSIG, + OR - 5 PSIG), LINE STRAINER, AND SHOCK ARRESTOR IN WALL. CONNECT SANITIZER TO CSW SUPPLY WITH 72" LONG BRAIDED STAINLESS STEEL HOSE.

6 1/2" FILTERED WATER WITH ASSE 1022 DOUBLE CHECK VALVE WITH ATMOSPHERIC VENT TO ICE MACHINE. REDUCE TO 3/8" AT MACHINE.

7 1/2" HOT WATER AND 1/2" COLD WATER TO ASSE 1070 THERMOSTATIC MIXING VALVE. 3/8" TEMPERED WATER FROM THERMOSTATIC MIXING VALVE TO FAUCET AT HAND SINK. SET THERMOSTATIC MIXING VALVE TO DELIVER 100F TEMPERED WATER.

8 1/2" FILTERED WATER TO COFFEE/TEA BREWER WITH ASSE 1022 DOUBLE CHECK VALVE WITH ATMOSPHERIC VENT. INSTALL SHUT-OFF IN CABINET @ 24" AFF REDUCE TO 3/8" AT UNIT.

9 1/2" FILTERED WATER TO ESPRESSO MACHINE PUMP. CONNECT 3/8" COMPRESSION BRAIDED STAINLESS STEEL HOSE FROM SHUT-OFF TO ESPRESSO MACHINE WATER INLET. SEE DETAIL PROVIDED ON SHEET P501.

10 1/2" COLD WATER TO DIPPERWELL FAUCET. REDUCE TO 1/4" AT UNIT.

11 1/2" FILTERED WATER TO INSTAHOT TAP. REDUCE TO 1/4" AT UNIT.

12 1/2" FILTERED WATER TO WATER TOWER FAUCET LOCATED IN WATER STATION.

13 1/2" COLD WATER TO TOILET. PROVIDE WATER HAMMER ARRESTOR IN SUPPLY LINE. SEE DETAIL ON SHEET P501.

14 1" FILTERED WATER AND 3/4" COLD WATER DOWN IN WALL TO BELOW SLAB. PROVIDE 1/2" ELASTOMETRIC INSULATION ON PIPING BELOW SLAB AND EXTEND 2" ABOVE FINISHED FLOOR. VERIFY ROUTING IN FIELD WITH GC PRIOR TO INSTALLATION.

15 1/2" HOT WATER WITH ASSE 1012 DOUBLE CHECK VALVE WITH ATMOSPHERIC VENT AND 1/2" COLD WATER WITH ASSE 1022 DOUBLE CHECK VALVE WITH ATMOSPHERIC VENT TO SINK.

16 CONNECT TO EXISTING 2" DOMESTIC WATER SERVICE IN SPACE. VERIFY EXACT SIZE, LOCATION, PRESSURE AND REQUIREMENTS ON SITE.

17 1/2" COLD WATER WITH ASSE 1022 DOUBLE CHECK VALVE WITH ATMOSPHERIC VENT TO PITCHER RINSER.

18 ROUTE 1" FILTERED WATER AND 3/4" COLD WATER BELOW COUNTER TOP LEVEL THROUGH CABINETRY. REFER TO NOTES 9, 10, 11, 12, AND 17. VERIFY ROUTING IN FIELD WITH GC PRIOR TO INSTALLATION.

19 3/4" COLD WATER TO EXISTING HOSE BIB TO REMAIN WITHOUT MODIFICATION.

20 3/4" HOT WATER RETURN TO HOT WATER RECIRC PUMP. SEE DETAIL SHEET P501.

21 1/2" COLD WATER WITH ASSE 1022 DOUBLE CHECK VALVE WITH ATMOSPHERIC VENT TO FAUCET AT SINK.

22 1/2" NITROGEN GAS LINE FROM NITROGEN GENERATOR TO NITRO WORKSTATION. FINAL CONNECTION BY STARBUCKS VENDOR.

23 EXISTING BACKFLOW PREVENTER TO REMAIN.

24 3/4" FILTERED WATER TO AND FROM WATER BOOSTER PUMP SET BOOSTER PUMP TO DELIVER 50 PSI. SEE DETAIL ON SHEET P502.

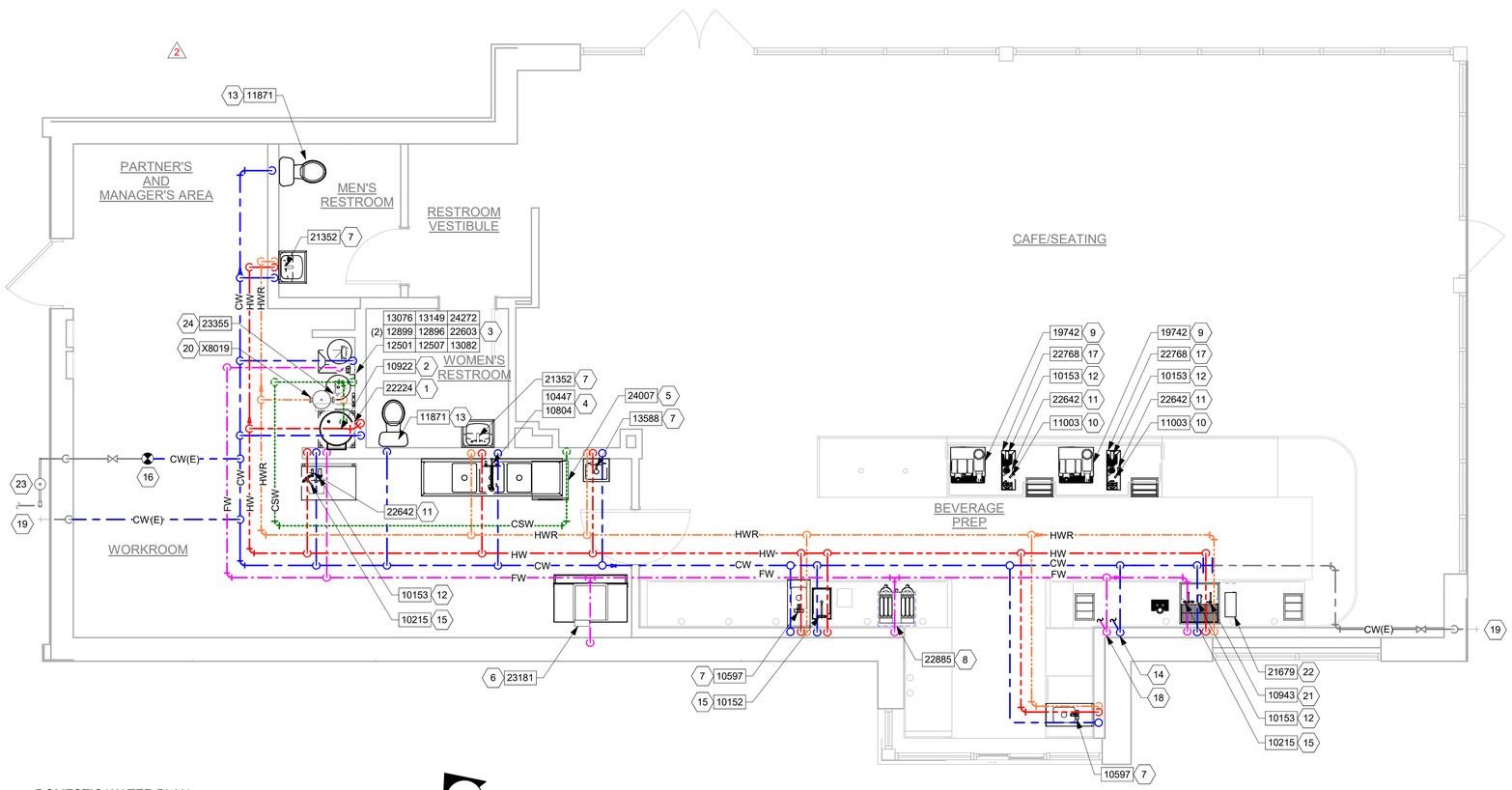

2 DOMESTIC WATER PLAN
1/4" = 1'-0"

Scale: 1/4" = 1'-0"

FOR CONSTRUCTION

© 2019 STARBUCKS COFFEE COMPANY

STARBUCKS®
2401 UTAH AVENUE SOUTH
SEATTLE, WASHINGTON 98134
(206) 318-1575

THESE DRAWINGS AND THE PROJECT MANUAL ARE CONFIDENTIAL AND SHALL REMAIN THE SOLE PROPERTY OF STARBUCKS CORPORATION, WHICH IS THE OWNER OF THE COPYRIGHT IN THIS WORK. THEY SHALL NOT BE REPRODUCED (IN WHOLE OR IN PART), SHARED WITH THIRD PARTIES OR USED IN ANY MANNER ON OTHER PROJECTS OR EXTENSIONS TO THIS PROJECT WITHOUT THE PRIOR WRITTEN CONSENT OF STARBUCKS CORPORATION. THESE DRAWINGS AND SPECIFICATIONS ARE INTENDED TO EXPRESS DESIGN INTENT FOR A PROTOTYPICAL STARBUCKS STORE (WHICH IS SUBJECT TO CHANGE AT ANYTIME) AND DO NOT REFLECT ACTUAL SITE CONDITIONS. NEITHER PARTY SHALL HAVE ANY OBLIGATION NOR LIABILITY TO THE OTHER (EXCEPT STATED ABOVE) UNTIL A WRITTEN AGREEMENT IS FULLY EXECUTED BY BOTH PARTIES.

STARBUCKS TEMPLATE VERSION: i2021-09-13

Design Forum Architects Inc.
2056 Byers Rd
Miamisburg, OH 45342
Tel: (844) 804-7700
Donald J. Rethman
Architect In Charge
License: AR00017303

Design Forum Engineering
2056 Byers Rd
Miamisburg, OH 45342
Tel: (844) 804-7700
Timothy L. Raberding, PE
Professional Engineer
License: 62078

PROJECT NAME:
US 98 & GRIFFIN RD

PROJECT ADDRESS:
3105 US-98 NORTH
LAKELAND, FLORIDA 33801

STORE #:	80004
PROJECT #:	96892-001
ISSUE DATE:	2025-09-26
DESIGN MANAGER:	ASHLEY ASUEIRAS
PRODUCTION DESIGNER:	ANDY MCLOUD
CHECKED BY:	DONALD RETHMAN

Revision Schedule

Rev	Date	Description
2	10/3/25	Revision 2

SHEET TITLE:
PLUMBING SUPPLY PLAN
SCALE:

SHEET NUMBER:
P111

10/9/2025 10:49:18 AM Autodesk Docs://US 98 and Griffin - Starbucks/TI_US 98 & Griffin Rd-MEP_R25_permit.rvt

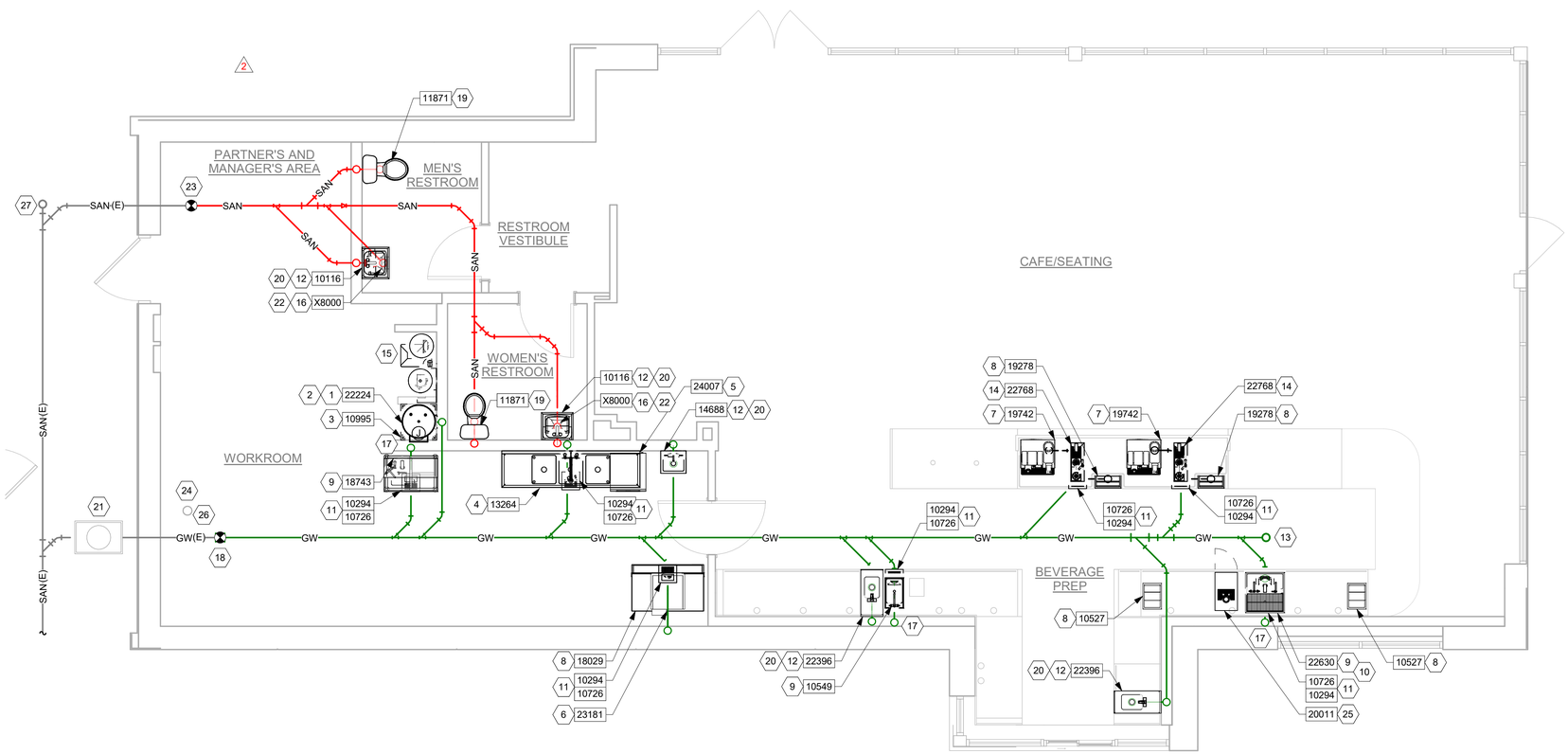

2 WASTE PLAN
1/4" = 1'-0"

0 2' 4' 8'
Scale: 1/4" = 1'-0"

N

GENERAL NOTES

A. FURNISH AND INSTALL A COMPLETE AND OPERATING SYSTEM. ALL ITEMS ARE NOT NECESSARILY SHOWN.

B. FOR FULL SCHEDULES AND COMPLETE LISTING SEE ARCHITECTURAL SCHEDULES. CONFIRM ALL QUANTITIES WITH PLAN.

C. PLUMBING CONTRACTOR RESPONSIBLE FOR SITE INVESTIGATION PRIOR TO START OF WORK TO REVEAL FULL SCOPE OF WORK.

D. COORDINATE WITH ELECTRICAL CONTRACTOR FOR POWER CONNECTORS FOR POWER CONNECTIONS TO ALL PLUMBING EQUIPMENT.

E. SEE ARCHITECTURAL DRAWINGS FOR DIMENSIONS.

F. ALL INDIRECT DRAIN LINES SHALL BE ROUTED WITHOUT DIPS OR SAGS TO TERMINATE WITH AN AIR GAP TWICE THE DIAMETER OF INDIRECT DRAIN PIPE INTO AN APPROVED INDIRECT WASTE RECEPTOR.

G. REFER TO DETAILS FOR FURTHER REQUIREMENTS.

H. LOCATIONS OF EXISTING PIPING AND FIXTURES ARE APPROXIMATE. VERIFY LOCATION IN FIELD.

KEYED NOTES

1 3/4" PRESSURE RELIEF FROM WATER HEATER TO MOP SINK.

2 1" INDIRECT DRAIN FROM WATER HEATER DRIP PAN TO MOP SINK.

3 3" WASTE FROM MOP SINK.

4 2" INDIRECT DRAIN FROM THREE COMPARTMENT SINK TO FLOOR SINK.

5 3/4" INDIRECT DRAIN FROM DISHWASHER TO FUNNEL OVER FLOOR SINK IF PERMITTED.

6 3/4" I.D. F.P.T. FROM DRAIN ON ICE MACHINE TO INDIRECT DRAIN AT FLOOR SINK.

7 5/8" DRAIN HOSE TO INDIRECT DRAIN RISER. SEE DETAIL ON SHEET P501.

8 1" INDIRECT INSULATED DRAIN LINE FROM ICE BIN DROP TO FLOOR SINK.

9 1-1/2" INDIRECT DRAIN FROM SINK TO FLOOR SINK.

10 1" INDIRECT DRAIN FROM WATER STATION DRAIN BOARD TO FLOOR SINK.

11 3" WASTE FROM FLOOR SINK.

12 2" WASTE FROM SINK.

13 FLOOR CLEAN OUT MATCH TO DRAIN IN LINE SIZE.

14 1-1/2" INDIRECT DRAIN FROM PITCHER RINSER TO FLOOR SINK.

15 3/4" INDIRECT DRAIN FROM WATER EQUIPMENT TO MOP SINK.

16 3" WASTE FROM FLOOR DRAIN.

17 2" VENT PIPE.

18 CONNECT TO EXISTING GREASE WASTE BUILDING DRAIN.

19 3" WASTE FROM WATER CLOSET.

20 WALL CLEAN OUT TO MATCH DRAIN LINE SIZE.

21 EXISTING 1250GAL GREASE INTERCEPTOR BY LANDLORD UNDER PERMIT #BLD24-08354 TO REMAIN.

22 PROVIDE ASSE 1072 TRAP GUARD IN FLOOR DRAIN P-TRAP.

23 CONNECT TO EXISTING SANITARY BUILDING DRAIN.

24 CONNECT TO EXISTING VENT THROUGH ROOF. VERIFY SIZE, LOCATION, AND CONDITION PRIOR TO BID.

25 1/2" INDIRECT DRAIN FROM NITRO DRIP TRAY TO FLOOR SINK.

26 3" VENT PIPE.

27 EXISTING CLEAN OUT TO REMAIN WITHOUT MODIFICATION.

2

FOR CONSTRUCTION

© 2019 STARBUCKS COFFEE COMPANY

STARBUCKS®
2401 UTAH AVENUE SOUTH
SEATTLE, WASHINGTON 98134
(206) 318-1575

THESE DRAWINGS AND THE PROJECT MANUAL ARE CONFIDENTIAL AND SHALL REMAIN THE SOLE PROPERTY OF STARBUCKS CORPORATION, WHICH IS THE OWNER OF THE COPYRIGHT IN THIS WORK. THEY SHALL NOT BE REPRODUCED (IN WHOLE OR IN PART), SHARED WITH THIRD PARTIES OR USED IN ANY MANNER ON OTHER PROJECTS OR EXTENSIONS TO THIS PROJECT WITHOUT THE PRIOR WRITTEN CONSENT OF STARBUCKS CORPORATION. THESE DRAWINGS AND SPECIFICATIONS ARE INTENDED TO EXPRESS DESIGN INTENT FOR A PROTOTYPICAL STARBUCKS STORE (WHICH IS SUBJECT TO CHANGE AT ANYTIME) AND DO NOT REFLECT ACTUAL SITE CONDITIONS. NEITHER PARTY SHALL HAVE ANY OBLIGATION NOR LIABILITY TO THE OTHER (EXCEPT STATED ABOVE) UNTIL A WRITTEN AGREEMENT IS FULLY EXECUTED BY BOTH PARTIES.

STARBUCKS TEMPLATE VERSION: i2021-09-13

Design Forum Architects Inc.
2056 Byers Rd
Miamisburg, OH 45342
Tel: (844) 804-7700
Donald J. Rethman
Architect In Charge
License: AR00017303

Design Forum Engineering
2056 Byers Rd
Miamisburg, OH 45342
Tel: (844) 804-7700
Timothy L. Raberding, PE
Professional Engineer
License: 62078

PROJECT NAME:
US 98 & GRIFFIN RD

PROJECT ADDRESS:
3105 US-98 NORTH
LAKELAND, FLORIDA 33801

STORE #:	80004
PROJECT #:	96892-001
ISSUE DATE:	2025-09-26
DESIGN MANAGER:	ASHLEY ASUEIRAS
PRODUCTION DESIGNER:	ANDY MCLOUD
CHECKED BY:	DONALD RETHMAN

Revision Schedule

Rev	Date	Description
2	10/3/25	Revision 2

SHEET TITLE:
PLUMBING WASTE PLAN

SCALE:

SHEET NUMBER:
P112

10/9/2025 10:51:56 AM Autodesk Docs://US 98 and Griffin - Starbucks/TI_US 98 & Griffin Rd-MEP_R25_permit.rvt

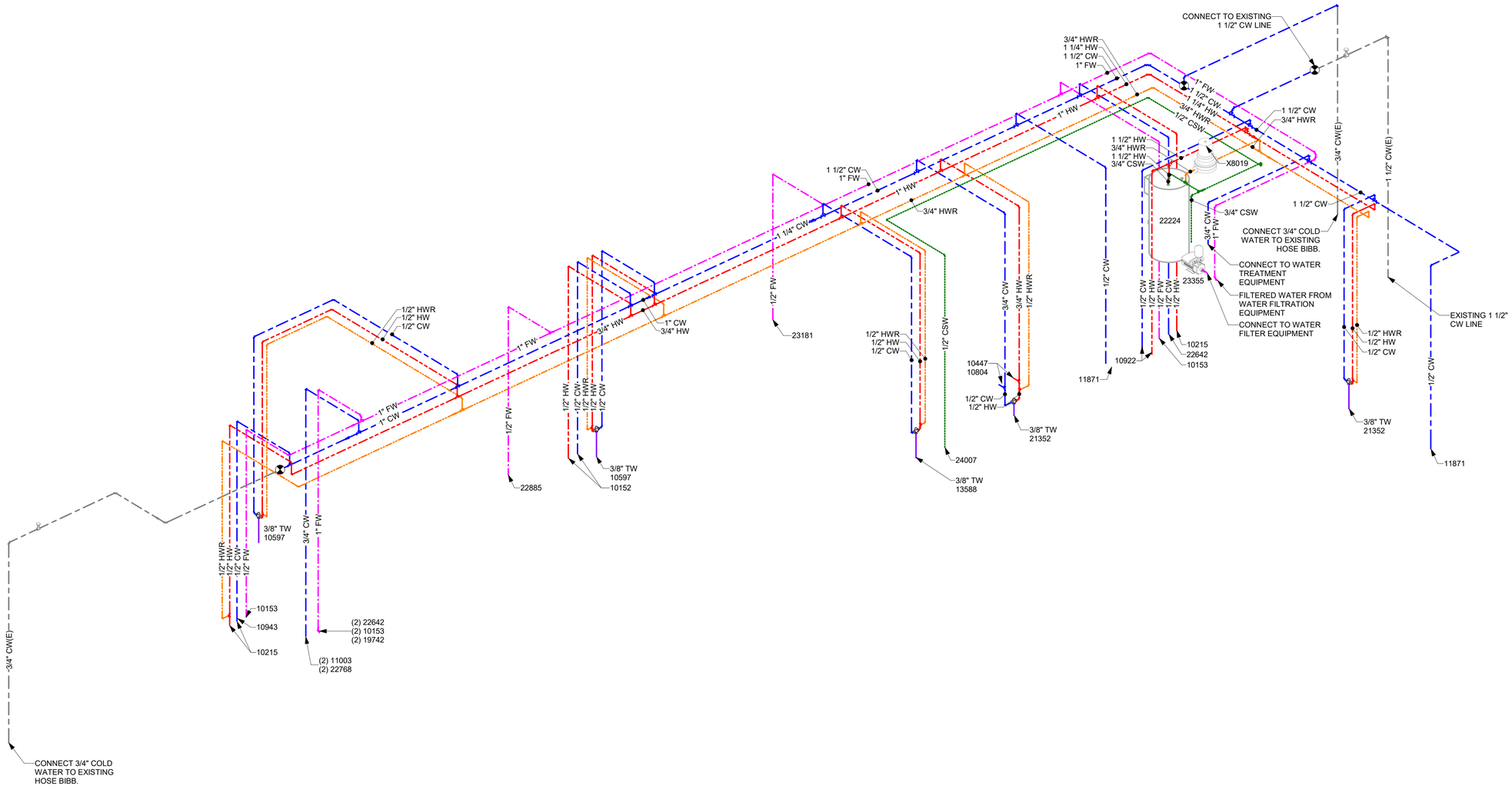

FOR CONSTRUCTION

© 2019 STARBUCKS COFFEE COMPANY

STARBUCKS®
2401 UTAH AVENUE SOUTH
SEATTLE, WASHINGTON 98134
(206) 318-1575

THESE DRAWINGS AND THE PROJECT MANUAL ARE CONFIDENTIAL AND SHALL REMAIN THE SOLE PROPERTY OF STARBUCKS CORPORATION, WHICH IS THE OWNER OF THE COPYRIGHT IN THIS WORK. THEY SHALL NOT BE REPRODUCED (IN WHOLE OR IN PART), SHARED WITH THIRD PARTIES OR USED IN ANY MANNER ON OTHER PROJECTS OR EXTENSIONS TO THIS PROJECT WITHOUT THE PRIOR WRITTEN CONSENT OF STARBUCKS CORPORATION. THESE DRAWINGS AND SPECIFICATIONS ARE INTENDED TO EXPRESS DESIGN INTENT FOR A PROTOTYPICAL STARBUCKS STORE (WHICH IS SUBJECT TO CHANGE AT ANYTIME) AND DO NOT REFLECT ACTUAL SITE CONDITIONS. NEITHER PARTY SHALL HAVE ANY OBLIGATION NOR LIABILITY TO THE OTHER (EXCEPT STATED ABOVE) UNTIL A WRITTEN AGREEMENT IS FULLY EXECUTED BY BOTH PARTIES.

STARBUCKS TEMPLATE VERSION: i2021-09-13

Design Forum Architects Inc.
2056 Byers Rd
Miamisburg, OH 45342
Tel: (844) 804-7700
Donald J. Rethman
Architect In Charge
License: AR00017303

Design Forum Engineering
2056 Byers Rd
Miamisburg, OH 45342
Tel: (844) 804-7700
Timothy L. Raberding, PE
Professional Engineer
License: 62078

PROJECT NAME:
US 98 & GRIFFIN RD

PROJECT ADDRESS:
3105 US-98 NORTH
LAKELAND, FLORIDA 33801

STORE #:	80004
PROJECT #:	96892-001
ISSUE DATE:	2025-09-26
DESIGN MANAGER:	ASHLEY ASUEIRAS
PRODUCTION DESIGNER:	ANDY MCLOUD
CHECKED BY:	DONALD RETHMAN

Revision Schedule

Rev	Date	Description
2	10/3/25	Revision 2

2

SHEET TITLE:
PLUMBING SUPPLY ISOMETRIC
SCALE:

SHEET NUMBER:
P114

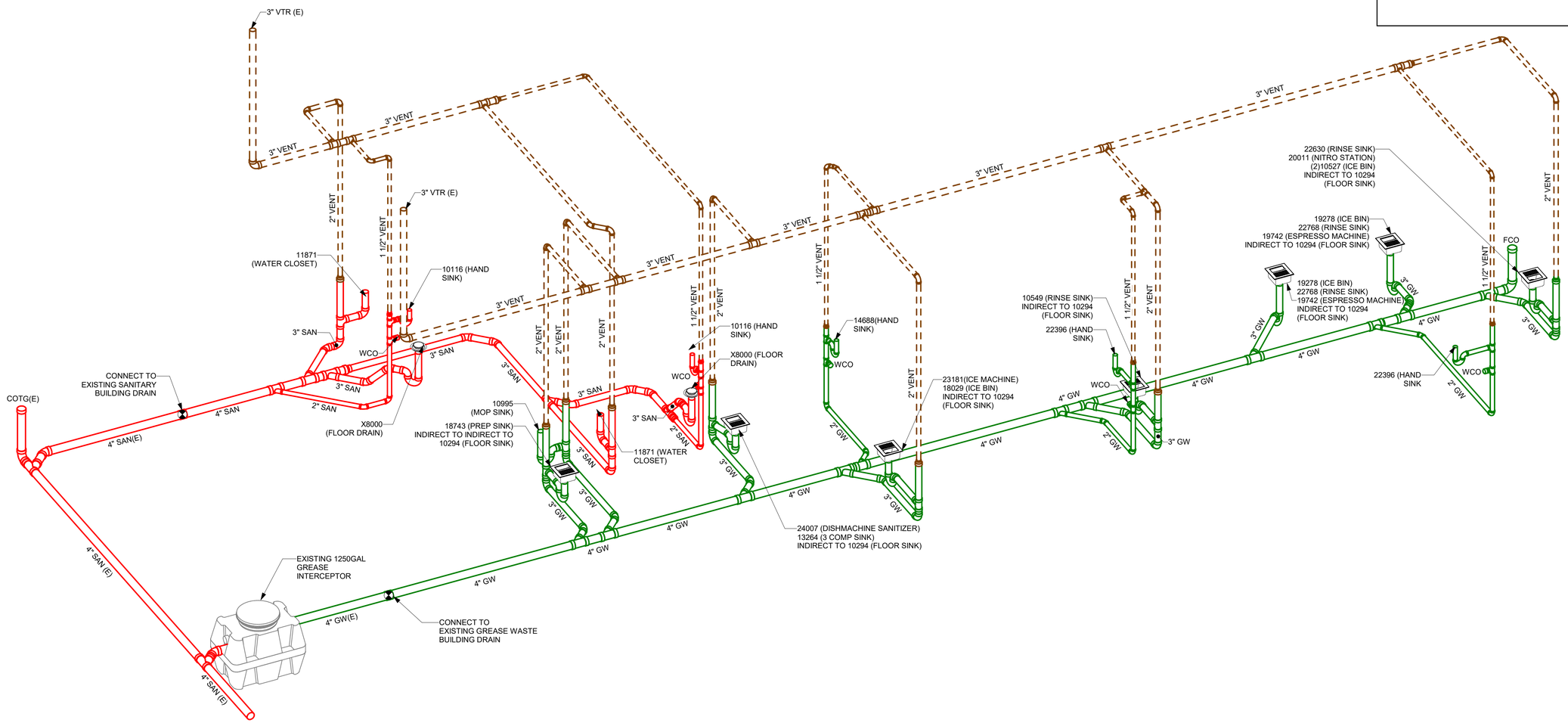

WASTE WATER ISOMETRIC

Scale: N.T.S

FOR CONSTRUCTION

2

© 2019 STARBUCKS COFFEE COMPANY

STARBUCKS®
2401 UTAH AVENUE SOUTH
SEATTLE, WASHINGTON 98134
(206) 318-1575

THESE DRAWINGS AND THE PROJECT MANUAL ARE CONFIDENTIAL AND SHALL REMAIN THE SOLE PROPERTY OF STARBUCKS CORPORATION, WHICH IS THE OWNER OF THE COPYRIGHT IN THIS WORK. THEY SHALL NOT BE REPRODUCED (IN WHOLE OR IN PART), SHARED WITH THIRD PARTIES OR USED IN ANY MANNER ON OTHER PROJECTS OR EXTENSIONS TO THIS PROJECT WITHOUT THE PRIOR WRITTEN CONSENT OF STARBUCKS CORPORATION. THESE DRAWINGS AND SPECIFICATIONS ARE INTENDED TO EXPRESS DESIGN INTENT FOR A PROTOTYPICAL STARBUCKS STORE (WHICH IS SUBJECT TO CHANGE AT ANYTIME) AND DO NOT REFLECT ACTUAL SITE CONDITIONS. NEITHER PARTY SHALL HAVE ANY OBLIGATION NOR LIABILITY TO THE OTHER (EXCEPT STATED ABOVE) UNTIL A WRITTEN AGREEMENT IS FULLY EXECUTED BY BOTH PARTIES.

STARBUCKS TEMPLATE VERSION: i2021-09-13

Design Forum Architects Inc.
2056 Byers Rd
Miamisburg, OH 45342
Tel: (844) 804-7700
Donald J. Rethman
Architect In Charge
License: AR00017303

Design Forum Engineering
2056 Byers Rd
Miamisburg, OH 45342
Tel: (844) 804-7700
Timothy L. Raberding, PE
Professional Engineer
License: 62078

PROJECT NAME:
US 98 & GRIFFIN RD

PROJECT ADDRESS:
3105 US-98 NORTH
LAKELAND, FLORIDA 33801

STORE #:	80004
PROJECT #:	96892-001
ISSUE DATE:	2025-09-26
DESIGN MANAGER:	ASHLEY ASUEIRAS
PRODUCTION DESIGNER:	ANDY MCLOUD
CHECKED BY:	DONALD RETHMAN

Revision Schedule

Rev	Date	Description
2	10/3/25	Revision 2

SHEET TITLE:
PLUMBING WASTE ISOMETRIC
SCALE:

SHEET NUMBER:
P115

10/9/2025 10:46:12 AM Autodesk Docs://US 98 and Griffin - Starbucks/TI_US 98 & Griffin Rd-MEP_R25_permit.rvt

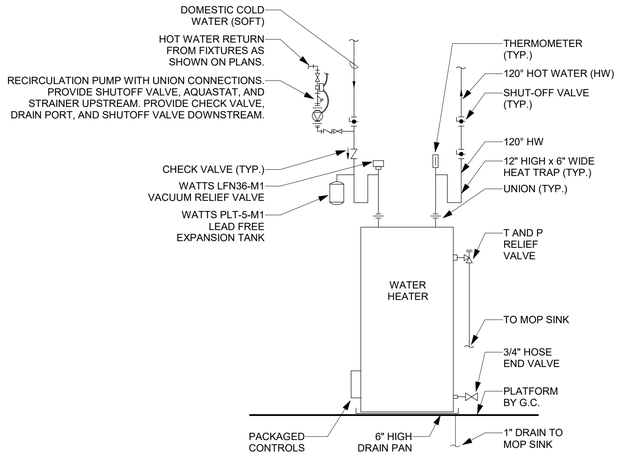

1 ELECTRIC WATER HEATER
N.T.S.

HOT WATER HEATER NOTES:

1. **RECIRCULATION PUMP:**
   BELL & GOSSETT #NBF-35 WET ROTOR TYPE IN-LINE 3-SPEED PUMP WITH 3300RPM MOTOR, LEAD FREE BRONZE BODY WITH FULL UNION CONNECTIONS, CAPACITY OF 15 GPM AT 15 FEET OF HEAD. PROVIDE WITH BELL & GOSSETT AQS-3/4 SURFACE MOUNTED AQUASTAT WITH SINGLE POLE DOUBLE THROW SWITCH FOR CIRCULATOR CONTROL. SET AQUASTAT TO SHUT "OFF" (OPEN) RECIRCULATION PUMP AT WATER HEATER SET POINT AND "ON" (CLOSED) AT 10°F BELOW SET POINT.
2. **ELECTRICAL REQUIREMENTS:**
   120 VOLT, 2.25 FULL LOAD AMPS.
3. **TIME SWITCH:**
   BELL & GOSSETT TC-1, 7 DAY, ONE CIRCUIT, SINGLE POLE SINGLE THROW, ELECTRONIC TIME SWITCH OR EQUAL. TIME SWITCH SHALL BE MOTOR RATED (1 HP @ 120 VOLT, SINGLE PHASE), MINIMUM OF 20 SET POINTS (14 ON/OFF CYCLES) AND BATTERY BACK-UP. COORDINATE WITH GC FOR INSTALLATION AND INTERLOCK OF TIME SWITCH IN SERIES WITH AQUASTAT AND RECIRCULATION PUMP. SET TIME SWITCH "ON" TO ONE HOUR BEFORE STORE OPENING AND "OFF" TO ONE HOUR AFTER STORE CLOSING. VERIFY STORE OPERATING HOURS WITH STARBUCKS CM.

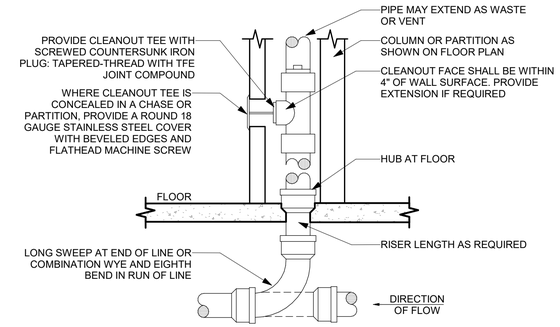

NOTES:
PROVIDE WALL CLEANOUT AT BASE OF ALL RAIN-LEADER DOWNSPOUTS. PROVIDE WALL CLEANOUT WHERE SHOWN ON PLAN, AND ON SANITARY WASTE BRANCHES NOT SERVED WITH A FLOOR CLEANOUT. LOCATE ABOVE FIXTURE FLOOD RIM WITHIN 4' OF FLOOR. CONSULT LOCAL CODES FOR OTHER WALL CLEANOUT REQUIREMENTS.

2 WALL CLEANOUT
N.T.S.

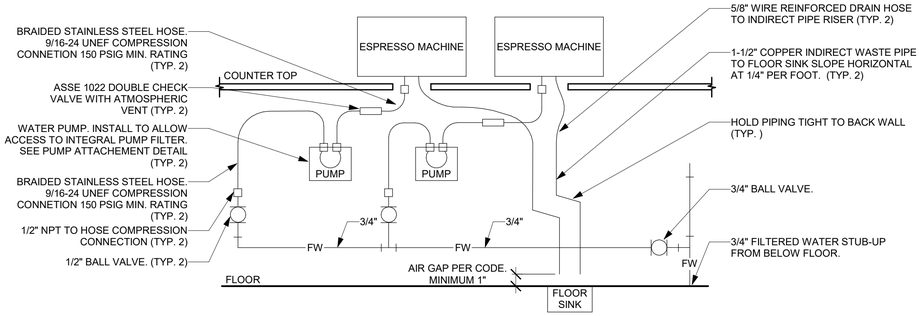

3 ESPRESSO MACHINE GENERAL PIPING CONNECTION SCHEMATIC
N.T.S.

ESPRESSO MACHINE DETAIL NOTES:

1. THIS DETAIL IS SCHEMATIC ONLY. FOR THE LOCATION OF THE COMPONENTS SHOWN, AND EXTENT OF THE WORK REQUIRED, SEE THE PLAN DRAWINGS.
2. ALL WATER HOSE SHALL BE THE MINIMUM LENGTH NEEDED AND SUPPORTED AS REQUIRED TO AVOID STRESSING CONNECTIONS AND COILING EXCESSIVE HOSE. ROUTE TO AVOID KINKING AND ALLOW SPACE FOR UNDER COUNTER REFRIGERATOR AND ACCESS TO EQUIPMENT AND VALVES.
3. ALL PIPING SHALL BE HELD TIGHT TO WALLS SLOPED WHERE REQUIRED AND ROUTED TO ALLOW ACCESS TO EQUIPMENT AND VALVES.
4. ROUTE HORIZONTAL PIPING A MINIMUM OF 6" ABOVE FLOOR.
5. INSTALL PUMP AS SHOWN ON PLANS. COORDINATE LOCATION AND ELEVATION WITH OTHER TRADES. ORIENT PUMP AS REQUIRED TO ALLOW MAINTENANCE.

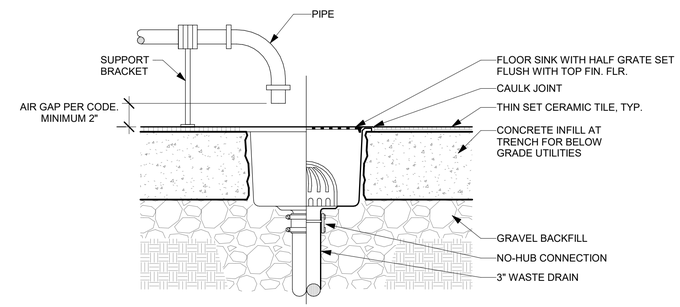

4 FLOOR SINK DETAIL
N.T.S.

PROVIDE CLEANOUT WITH ADJUSTABLE CLEANOUT TOP WITH VARIATIONS SUITABLE FOR FLOOR COVERING (CARPET MARKER, RECESSED FOR TILE, SCORIATED FOR UNFINISHED FLOORS). CLEAN THE TOP OF EXPOSED FCO AFTER INSTALLATION.

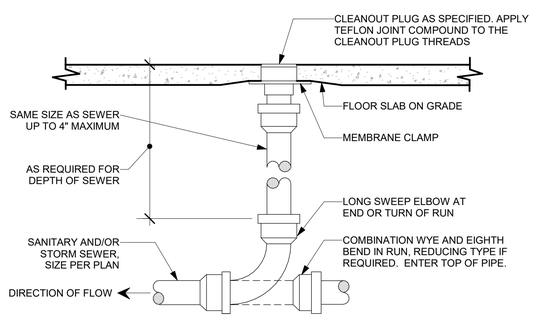

NOTES:
REFER TO SPECIFICATIONS AND SCHEDULE FOR MORE INFORMATION. LOCATE AT BUILDING EXIT, AT ENDS OF RUNS, AT TURNS OF PIPE GREATER THAN 45°, AT 50' INTERVALS ON STRAIGHT RUNS, AND/OR WHERE SHOWN ON PLANS AND RISERS. PROVIDE BACKFILL PER ARCHITECTURAL SPECIFICATIONS. LOCATE CLEANOUT WHERE THERE IS 18" CLEAR AROUND, FOR ACCESSIBILITY.CONSULT LOCAL CODES AND OFFICIALS FOR OTHER REQUIREMENTS.

5 FLOOR CLEANOUT
N.T.S.

2

FOR CONSTRUCTION

© 2019 STARBUCKS COFFEE COMPANY

STARBUCKS
2401 UTAH AVENUE SOUTH
SEATTLE, WASHINGTON 98134
(206) 318-1575

THESE DRAWINGS AND THE PROJECT MANUAL ARE CONFIDENTIAL AND SHALL REMAIN THE SOLE PROPERTY OF STARBUCKS CORPORATION, WHICH IS THE OWNER OF THE COPYRIGHT IN THIS WORK. THEY SHALL NOT BE REPRODUCED (IN WHOLE OR IN PART), SHARED WITH THIRD PARTIES OR USED IN ANY MANNER ON OTHER PROJECTS OR EXTENSIONS TO THIS PROJECT WITHOUT THE PRIOR WRITTEN CONSENT OF STARBUCKS CORPORATION. THESE DRAWINGS AND SPECIFICATIONS ARE INTENDED TO EXPRESS DESIGN INTENT FOR A PROTOTYPICAL STARBUCKS STORE (WHICH IS SUBJECT TO CHANGE AT ANYTIME) AND DO NOT REFLECT ACTUAL SITE CONDITIONS. NEITHER PARTY SHALL HAVE ANY OBLIGATION NOR LIABILITY TO THE OTHER (EXCEPT STATED ABOVE) UNTIL A WRITTEN AGREEMENT IS FULLY EXECUTED BY BOTH PARTIES.

STARBUCKS TEMPLATE VERSION: i2021-09-13

Design Forum Architects Inc.
2056 Byers Rd
Miamisburg, OH 45342
Tel: (844) 804-7700
Donald J. Rethman
Architect In Charge
License: AR00017303

Design Forum Engineering
2056 Byers Rd
Miamisburg, OH 45342
Tel: (844) 804-7700
Timothy L. Raberding, PE
Professional Engineer
License: 62078

PROJECT NAME:
US 98 & GRIFFIN RD

PROJECT ADDRESS:
3105 US-98 NORTH
LAKELAND, FLORIDA 33801

STORE #:	80004
PROJECT #:	96892-001
ISSUE DATE:	2025-09-26
DESIGN MANAGER:	ASHLEY ASUEIRAS
PRODUCTION DESIGNER:	ANDY MCLOUD
CHECKED BY:	DONALD RETHMAN

Revision Schedule

Rev	Date	Description
2	10/3/25	Revision 2

SHEET TITLE:
PLUMBING DETAILS

SCALE:

SHEET NUMBER:
P501

10/9/2025 10:47:11 AM Autodesk Docs://US 98 and Griffin - Starbucks/TI_US 98 & Griffin Rd-MEP_R25_permit.rvt

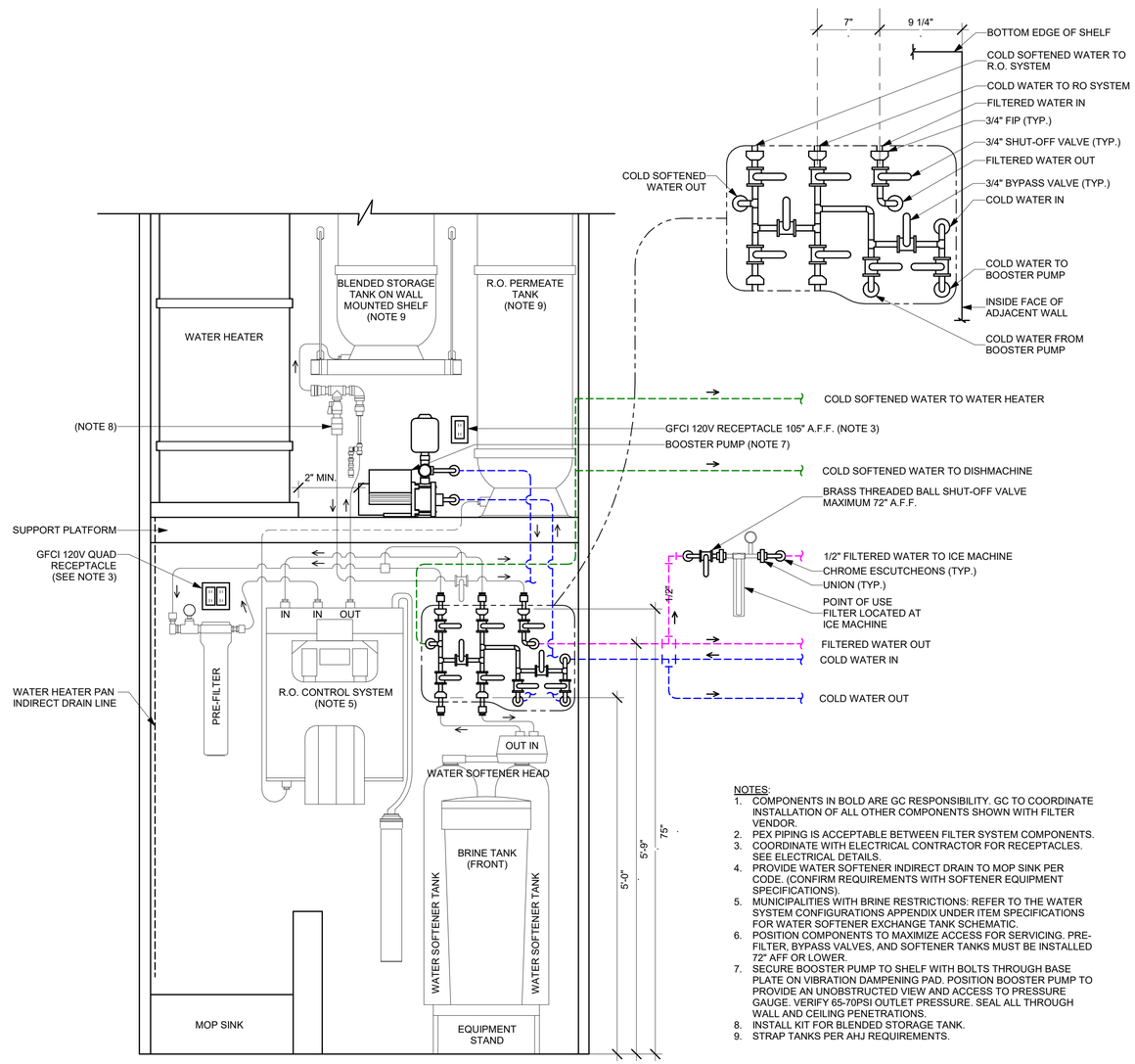

1 TYPE 3 WATER FILTRATION SYSTEM
N.T.S.

NOTES:
1. COMPONENTS IN BOLD ARE GC RESPONSIBILITY. GC TO COORDINATE INSTALLATION OF ALL OTHER COMPONENTS SHOWN WITH FILTER VENDOR.
2. PEX PIPING IS ACCEPTABLE BETWEEN FILTER SYSTEM COMPONENTS.
3. COORDINATE WITH ELECTRICAL CONTRACTOR FOR RECEPTACLES. SEE ELECTRICAL DETAILS.
4. PROVIDE WATER SOFTENER INDIRECT DRAIN TO MOP SINK PER CODE. (CONFIRM REQUIREMENTS WITH SOFTENER EQUIPMENT SPECIFICATIONS).
5. MUNICIPALITIES WITH BRINE RESTRICTIONS: REFER TO THE WATER SYSTEM CONFIGURATIONS APPENDIX UNDER ITEM SPECIFICATIONS FOR WATER SOFTENER EXCHANGE TANK SCHEMATIC.
6. POSITION COMPONENTS TO MAXIMIZE ACCESS FOR SERVICING. PRE-FILTER, BYPASS VALVES, AND SOFTENER TANKS MUST BE INSTALLED 72" AFF OR LOWER.
7. SECURE BOOSTER PUMP TO SHELF WITH BOLTS THROUGH BASE PLATE ON VIBRATION DAMPENING PAD. POSITION BOOSTER PUMP TO PROVIDE AN UNOBSTRUCTED VIEW AND ACCESS TO PRESSURE GAUGE. VERIFY 65-70PSI OUTLET PRESSURE. SEAL ALL THROUGH WALL AND CEILING PENETRATIONS.
8. INSTALL KIT FOR BLENDED STORAGE TANK.
9. STRAP TANKS PER AHJ REQUIREMENTS.

FOR CONSTRUCTION

© 2019 STARBUCKS COFFEE COMPANY

STARBUCKS®
2401 UTAH AVENUE SOUTH
SEATTLE, WASHINGTON 98134
(206) 318-1575

THESE DRAWINGS AND THE PROJECT MANUAL ARE CONFIDENTIAL AND SHALL REMAIN THE SOLE PROPERTY OF STARBUCKS CORPORATION, WHICH IS THE OWNER OF THE COPYRIGHT IN THIS WORK. THEY SHALL NOT BE REPRODUCED (IN WHOLE OR IN PART), SHARED WITH THIRD PARTIES OR USED IN ANY MANNER ON OTHER PROJECTS OR EXTENSIONS TO THIS PROJECT WITHOUT THE PRIOR WRITTEN CONSENT OF STARBUCKS CORPORATION. THESE DRAWINGS AND SPECIFICATIONS ARE INTENDED TO EXPRESS DESIGN INTENT FOR A PROTOTYPICAL STARBUCKS STORE (WHICH IS SUBJECT TO CHANGE AT ANYTIME) AND DO NOT REFLECT ACTUAL SITE CONDITIONS. NEITHER PARTY SHALL HAVE ANY OBLIGATION NOR LIABILITY TO THE OTHER (EXCEPT STATED ABOVE) UNTIL A WRITTEN AGREEMENT IS FULLY EXECUTED BY BOTH PARTIES.

STARBUCKS TEMPLATE VERSION: i2021-09-13

Design Forum Architects Inc.
2056 Byers Rd
Miamisburg, OH 45342
Tel: (844) 804-7700
Donald J. Rethman
Architect In Charge
License: AR00017303

Design Forum Engineering
2056 Byers Rd
Miamisburg, OH 45342
Tel: (844) 804-7700
Timothy L. Raberding, PE
Professional Engineer
License: 62078

PROJECT NAME:
US 98 & GRIFFIN RD

PROJECT ADDRESS:
3105 US-98 NORTH
LAKELAND, FLORIDA 33801

STORE #:	80004
PROJECT #:	96892-001
ISSUE DATE:	2025-09-26
DESIGN MANAGER:	ASHLEY ASUEIRAS
PRODUCTION DESIGNER:	ANDY MCLOUD
CHECKED BY:	DONALD RETHMAN

Revision Schedule

Rev	Date	Description
2	10/3/25	Revision 2

2

SHEET TITLE:
PLUMBING DETAILS

SCALE:

SHEET NUMBER:
P502

10/9/2025 10:27:22 AM Autodesk Docs://US 98 and Griffin - Starbucks/TI_US 98 & Griffin Rd-MEP_R25_permit.rvt

WASTE & WATER SERVICE CALCULATIONS

EQUIPMENT	QUANTITY	WASTE		COLD		HOT		COMMENTS
		F.U.	TOT.	F.U.	TOT.	F.U.	TOT.	
BREWER	1		0	0.5	0.5		0	
EMERGENCY FLOOR DRAIN	2		0		0		0	
ESPRESSO MACHINE	2		0	1	2		0	INDIRECT TO FLOOR SINK
FLOOR SINK	7	5	35		0		0	
HAND SINK	3	1	3	0.5	1.5	0.5	1.5	
ICE MACHINE	1	0	0	0.5	0.5		0	INDIRECT TO FLOOR SINK
KITCHEN SINK	3		0	3	9	3	9	INDIRECT TO FLOOR SINK
LAVATORY	2	1	2	1.5	3	1.5	3	
MOP SINK	1	2	2	2.25	2.25	2.25	2.25	
PITCHER RINSER	2		0	3	6		0	INDIRECT TO FLOOR SINK
THREE COMPARTMENT SINK	1		0	2.25	2.25	2.25	2.25	INDIRECT TO FLOOR SINK
WAREWASHER	1		0	6	6		0	INDIRECT TO FLOOR SINK
WATER CLOSET	2	4	8	5	10		0	
FIXTURE UNIT TOTALS	28		50		43		18	

ELECTRICAL WATER HEATER

TAG	GALLON CAPACITY	VOLTAGE/ PHASE	UPPER/LOWER WATTAGE	NO. OF ELEMENTS	GPH RECOVERY @80º	MANUFACTURER	MODEL
22224	50	208/3	13500	3	70	BRADFORD WHITE	E32-50S-3

2

NEW EQUIPMENT & PLUMBING FIXTURE SCHEDULE

DESIGN ID	COUNT	DESCRIPTION	RESPONSIBILITY	SERVES	W	IW	V	CW	CSW	FW	HW	TW	COMMENTS
CASEWORK													
22396	2	CABINET WITH HAND SINK	SB-GC	10597	2"		1 1/2"						
DRAIN		2											
10294	7	DRAIN - FLOOR SINK SQUARE - 12IN	SB-GC		3"		2"						
10726	7	DRAIN - GRATE HALF SQUARE - 12IN	SB-GC										
X8000	2	FLOOR DRAIN - 6" ROUND	GC-GC	RESTROOMS	3"		2"						JAY R SMITH 2005-K06CP
EQUIPMENT													
19742	2	ESPRESSO MACHINE MASTRENA	SB-GC			5/8"				1/2"			
22885	1	BREWER CLOVER VERTICA DOUBLE	SB-GC							1/2"			
24007	1	DISHWASHER SANITIZER	SB-GC			3/4"			1/2"				
2 X8019	1	HOT WATER RECIRCULATION PUMP	GC-GC										BELL & GOSSETT MODEL NBF-36 PUMP WITH BELL & GOSSETT AQS-3/4 AQUASTAT, AND BELL & GOSSETT TC-1 AUTOMATIC TIMER
FAUCET													
2 10152	1	FAUCET - DOUBLE LABORATORY WITH BENT RISER SPOUT	SB-GC	10549				1/2"			1/2"		2.2GPM
10153	4	FAUCET - WATER TOWER - 12IN 305MM	SB-GC	18743, 22768, 22630						1/2"			
10215	2	FAUCET - DOUBLE LABORATORY WITH SWING SPOUT	SB-GC	18743, 22630				1/2"			1/2"		2.2GPM
10447	1	FAUCET - PRE RINSE SPRAYER WALL MOUNTED	SB-GC	13700				1/2"			1/2"		1.2GPM
10597	2	FAUCET - SINGLE HANDLE	SB-GC	22396				1/2"				3/8"	0.5GPM AERATOR
10804	1	FAUCET - PRE RINSE SWING SPOUT	SB-GC	13700									1.2GPM
10922	1	FAUCET - MOP SINK WALL MOUNTED	SB-GC	10995				3/8"			1/2"		
2 10943	1	FAUCET - SINGLE LABORATORY WITH SWING SPOUT	SB-GC	22630				1/2"					2.2GPM
11003	2	FAUCET - DIPPERWELL	SB-GC	22768				1/2"					0.5GPM METERED
13588	1	FAUCET - HAND SINK WALL MOUNTED	SB-GC	14688				1/2"			3/8"		0.5GPM AERATOR
21352	2	FAUCET - SINGLE HANDLE - METERED MOTION SENSOR	SB-GC	10116				1/2"				1/2"	0.5GPM METERED
22642	3	FAUCET - HOT WATER DISPENSER GOOSENECK	SB-GC	18743, 22768						1/2"			
FILTER													
12501	1	FILTER - RO SYSTEM 600GPD	SB-GC					3/4"		3/4"			PENTAIR
12507	1	FILTER - RO SYSTEM 40GAL STORAGE TANK	SB-GC										PENTAIR
12896	1	FILTER - BRINE TANK	SB-GC										PENTAIR
12899	2	FILTER - POLY GLASS VESSEL	SB-GC										PENTAIR
13076	1	FILTER - PREFILTRATION SYSTEM	SB-GC										PENTAIR
13082	1	FILTER - WATER SOFTENER TWIN	SB-GC										PENTAIR
13149	1	FILTER - PRESSURE GAUGE	SB-GC										PENTAIR
22603	1	FILTER - RO SYSTEM STORAGE TANK RO20	SB-GC							3/4"			PENTAIR
23355	1	BOOSTER PUMP	SB-GC							1"			
24272	1	FILTER - RO SYSTEM INSTALL KIT	SB-GC										PENTAIR
ICE													
10527	2	ICE - BIN DROP IN 45LB 20KG	SB-GC			1"							
18029	1	ICE - 48" BIN 854LB	SB-GC			1"							
19278	2	ICE - BIN DROP IN 45LB 20KG	SB-GC			1"							
2 23181	1	ICE - MACHINE HMD2110RBT REMOTE COOLED	SB-GC			3/4"				1/2"			
NITRO SYSTEM													
20011	1	NITRO STATION	SB-GC			1/2"							
21679	1	NITROGEN GENERATOR COMPACT	SB-GC										
SINK													
10116	2	SINK - RESTROOM WALL MOUNTED	SB-GC	21352	2"		1 1/2"						
10549	1	SINK - RINSE DROP IN SST - 12X20IN	SB-GC	10152		1 1/2"							
10995	1	SINK - MOP - 24X24IN	SB-GC	10922	3"		2"						
13264	1	SINK - 3 COMP WORK SST - 93IN	SB-GC	10447, 10804		2"							
2 14688	1	SINK - HAND WALL MOUNTED WITH SIDE SPLASH SST	SB-GC	13588	2"		1 1/2"						
18743	1	PREP STATION SINK	SB-GC	22642, 10153, 10215		1 1/2"	1 1/2"						
22630	1	SINK - RINSE DROP IN - 27X26IN	SB-GC	10153, 10943, 10215		1 1/2"							
22768	2	SINK - COUNTERTOP RINSER WITH WATER TOWER - 26X9IN 660X235MM	SB-GC	10153, 11003, 22642		1 1/2"		1/2"					
TOILET													
11871	2	TOILET - TANK EFFICIENT SINGLE FLUSH	GC-GC		3"		2"	1/2"					
WATER HEATER													
2 22224	1	WATER HEATER 50GAL ELECTRIC	GC-GC			3/4"			3/4"		2"		

FOR CONSTRUCTION

© 2019 STARBUCKS COFFEE COMPANY

STARBUCKS®
2401 UTAH AVENUE SOUTH
SEATTLE, WASHINGTON 98134
(206) 318-1575

THESE DRAWINGS AND THE PROJECT MANUAL ARE CONFIDENTIAL AND SHALL REMAIN THE SOLE PROPERTY OF STARBUCKS CORPORATION, WHICH IS THE OWNER OF THE COPYRIGHT IN THIS WORK. THEY SHALL NOT BE REPRODUCED (IN WHOLE OR IN PART), SHARED WITH THIRD PARTIES OR USED IN ANY MANNER ON OTHER PROJECTS OR EXTENSIONS TO THIS PROJECT WITHOUT THE PRIOR WRITTEN CONSENT OF STARBUCKS CORPORATION. THESE DRAWINGS AND SPECIFICATIONS ARE INTENDED TO EXPRESS DESIGN INTENT FOR A PROTOTYPICAL STARBUCKS STORE (WHICH IS SUBJECT TO CHANGE AT ANYTIME) AND DO NOT REFLECT ACTUAL SITE CONDITIONS. NEITHER PARTY SHALL HAVE ANY OBLIGATION NOR LIABILITY TO THE OTHER (EXCEPT STATED ABOVE) UNTIL A WRITTEN AGREEMENT IS FULLY EXECUTED BY BOTH PARTIES.

STARBUCKS TEMPLATE VERSION: i2021-09-13

Design Forum Architects Inc.
2056 Byers Rd
Miamisburg, OH 45342
Tel: (844) 804-7700
Donald J. Rethman
Architect In Charge
License: AR00017303

Design Forum Engineering
2056 Byers Rd
Miamisburg, OH 45342
Tel: (844) 804-7700
Timothy L. Raberding, PE
Professional Engineer
License: 62078

PROJECT NAME:
US 98 & GRIFFIN RD

PROJECT ADDRESS:
3105 US-98 NORTH
LAKELAND, FLORIDA 33801

STORE #:	80004
PROJECT #:	96892-001
ISSUE DATE:	2025-09-26
DESIGN MANAGER:	ASHLEY ASUEIRAS
PRODUCTION DESIGNER:	ANDY MCLOUD
CHECKED BY:	DONALD RETHMAN

Revision Schedule

Rev	Date	Description
2	10/3/25	Revision 2

SHEET TITLE:
PLUMBING SCHEDULES

SCALE:

SHEET NUMBER:
P601

10/9/2025 10:49:56 AM Autodesk Docs://US 98 and Griffin - Starbucks/TI_US 98 & Griffin Rd-MEP_R25_permit.rvt

ABBREVIATIONS

AFF	ABOVE FINISHED FLOOR
AHJ	AUTHORITIES HAVING JURISDICTION
APPROX	APPROXIMATE
BLDG	BUILDING
CO	CARBON MONOXIDE
CO2	CARBON DIOXIDE
CM	STARBUCKS CONSTRUCTION MANAGER
CD	CEILING DIFFUSER
CLG	CEILING
CONST	CONSTRUCTION
CXA	COMMISSIONING AGENT
DEG	DEGREES
DM	STARBUCKS DESIGN MANAGER
DN	DOWN
DTL	DETAIL
DWG(S)	DRAWING(S)
EA	EACH
EC	ELECTRICAL CONTRACTOR
ECP	EQUIPMENT CONTROL PAC
EG	EXHAUST GRILLE
ELEC	ELECTRICAL
EM	EMERGENCY
EMS	ENERGY MANAGEMENT SYSTEM
EXIST	EXISTING
EXT	EXTERIOR
FLR	FLOOR
FT	FOOT/FEET
G	GAS PIPING
GC	GENERAL CONTRACTOR
HR	HOUR
HVAC	HEATING, VENTILATION, AIR CONDITIONING
I.D.	INSIDE DIAMETER
IAQ	INDOOR AIR QUALITY
LCP	LIGHTING CONTROL PANEL
LL	LANDLORD
LV	LOW VOLTAGE
MAX	MAXIMUM
MC	MECHANICAL CONTRACTOR
MECH	MECHANICAL
MEP	MECHANICAL, ELECTRICAL AND PLUMBING
MFG	MANUFACTURER
MIN	MINIMUM
NTS	NOT TO SCALE
O.D.	OUTSIDE DIMENSION
OSA	OUTSIDE AIR
REF	REFERENCE
REQ'D	REQUIRED
REV	REVISION
RT	ROOFTOP
SB	STARBUCKS
SF	SQUARE FEET
SHT	SHEET
SPECS	SPECIFICATION(S)
SST	STAINLESS STEEL
TEMP	TEMPORARY
TYP	TYPICAL
UNO	UNLESS NOTED OTHERWISE
UC	UNDER COUNTER
VD	VENDOR
WH	WATER HEATER
WSHP	WATER SOURCE HEAT PUMP

GENERAL NOTES

SCOPE
THE INTENT OF THE PROJECT MANUAL AND THE DRAWINGS IS TO PROVIDE A COMPLETE AND FULLY OPERATIONAL MECHANICAL SYSTEM. THE MECHANICAL CONTRACTOR SHALL FURNISH ALL LABOR, MATERIAL, AND EQUIPMENT NECESSARY TO COMPLETE THE MECHANICAL WORK.

SITE EXAMINATION
THE MECHANICAL CONTRACTOR SHALL THOROUGHLY EXAMINE ALL AREAS WHERE EQUIPMENT, DUCTWORK, AND PIPING WILL BE INSTALLED AND WILL REPORT ANY CONDITION THAT, IN HIS OPINION, PREVENTS THE PROPER INSTALLATION OF THE MECHANICAL WORK.

PENETRATIONS
WHERE PIPES AND DUCTS PENETRATE WALL, SEAL OPENINGS TO PREVENT AIR TRANSFER BETWEEN SPACES. USE FIRE RATED SEALANTS ON ALL FIRE SEPARATION PENETRATIONS, INCLUDING FLOORS. SEAL AROUND ALL PIPES AND DUCTS PENETRATING FIRE SEPARATIONS WITH NON-COMBUSTIBLE PACKING RETAINED BY METAL COLLARS. THE ASSEMBLY SHALL BE APPROVED BY STATE FIRE MARSHALL.

STANDARDS
EQUIPMENT AND MATERIALS SHALL CONFORM WITH THE APPROPRIATE PROVISIONS OF CSA, ULC, ARL, ASME, ASTM, UL, NEMA, ANSI, SMACNA, ASHRAE, NFPA, AS APPLICABLE TO EACH INDIVIDUAL UNIT OR ASSEMBLY.

CODES
ALL WORK SHALL BE PERFORMED IN STRICT ACCORDANCE WITH ALL APPLICABLE PROVINCIAL AND LOCAL CODES AND ORDINANCES. IN CASE OF CONFLICT BETWEEN THE DRAWINGS AND PROJECT MANUAL AND THE CODES AND ORDINANCES, USE WHICHEVER IS MORE STRINGENT. THE MECHANICAL CONTRACTOR SHALL SATISFY CODE REQUIREMENTS AS A MINIMUM STANDARD WITHOUT ANY EXTRA COST TO STARBUCKS.

PERMITS AND FEES
THE MECHANICAL CONTRACTOR SHALL PROCURE AND PAY FOR ALL PERMITS, FEES, AND INSPECTIONS NECESSARY TO COMPLETE THE MECHANICAL WORK.

WARRANTY
THE MECHANICAL CONTRACTOR SHALL UNCONDITIONALLY WARRANT ALL WORK TO BE FREE OF DEFECTS IN MATERIAL AND WORKMANSHIP FOR A PERIOD OF ONE (1) YEAR FROM THE DATE OF FINAL ACCEPTANCE BY STARBUCKS AND WILL REPAIR OR REPLACE ANY DEFECTIVE WORK PROMPTLY AND WITHOUT CHARGE AND RESTORE ANY OTHER EXISTING WORK DAMAGED IN THE COURSE OF REPAIRING DEFECTIVE MATERIALS AND WORKMANSHIP.

MECHANICAL SYMBOL LEGEND

- TYPICAL SUPPLY DUCT UP/DN
- TYPICAL RETURN DUCT UP/DN
- TYPICAL EXHAUST DUCT UP/DN
- TURNING VANES
- EF-1 — EQUIPMENT DESIGNATION
- T S — THERMOSTAT AND THERMOSTAT SENSOR
- SUPPLY AIR ARROW
- RETURN AIR ARROW
- DUCT HEATER
- MANUAL VOLUME DAMPER
- BDD — BACK DRAFT DAMPER
- SD — SMOKE DETECTOR
- S — COMBINATION SMOKE AND FIRE DAMPER
- SPIN-IN TAKE-OFF AND VOLUME DAMPER
- U — UNDERCUT DOOR
- CONNECT TO EXISTING
- 12 X 8 — INDICATES UNLINED 12" X 8" O.D. SHEETMETAL 1ST FIGURE = SIDE SHOWN 2ND FIGURE = SIDE NOT SHOWN
- 12 X 8 — INDICATED 14" X 10" (355mm X 255mm) O.D. SHEETMETAL W/ 1" (25mm) SOUNDLINER (U.N.O), 12" X 8" (305mm X 205mm I.D. NET
- FLEXIBLE DUCT CONNECTION
- FLEXIBLE DUCT
- 2 @ 350 — (QUANTITY) @ DESIGN CFM. IF NO QUANTITY IS NOTED, QUANTITY IS "1"
- CD-110"Ø — NECK SIZE
- DIFFUSER TYPE (REFER SCHEDULE)
- CEILING DIFFUSER (FLOW ARROWS SHOWN ONLY IF AIR FLOW NOT SYMMETRICAL)
- CEILING EXHAUST AND RETURN GRILLE

CONTROLS AND OPERATION NOTES

THE GENERAL CONTRACTOR SHALL FURNISH AND INSTALL THE FOLLOWING COMPONENTS:

CONTROL WIRING
THE MECHANICAL CONTRACTOR SHALL PROVIDE ALL CONTROL WIRING IN CONDUIT NECESSARY FOR THE COMPLETE AND PROPER OPERATING TEMPERATURE CONTROL SYSTEM INCLUDING ALL MODES OF OPERATION AND INTERLOCK.

EXHAUST FANS
RESTROOM EXHAUST FAN(S) TO BE OPERATED IN CONJUNCTION WITH STORE HOURS UNLESS OTHERWISE NOTED OR APPROVED OR AS REQUIRED BY JURISDICTION (COORDINATE WITH ELECTRICAL).

THERMOSTAT
PERMANENT THERMOSTAT(S) AND REMOTE SENSOR(S) SHALL BE FURNISHED AND INSTALLED. ONE THERMOSTAT AND SENSOR IS PROVIDED FOR EACH AIR HANDLING UNIT. MOUNT THERMOSTAT(S) AND SENSOR(S) IN LOCATION & HEIGHT AS INCUBATED ON DRAWINGS. MECHANICAL CONTRACTOR TO PROVIDE THERMOSTAT IDENTIFICATION LABELS PER SPECIFICATION REQUIREMENTS. REFER TO THERMOSTAT SETUP INSTRUCTIONS BELOW FOR ADDITIONAL REQUIREMENTS.

THERMOSTAT SETUP INSTRUCTIONS
PROVIDE THE FOLLOWING SETUP AND PROGRAMMING:

A. CONFIGURE AS FOLLOWS:
   a. DEGREES "F" DISPLAY
   b. 12 HOUR CLOCK
   c. CONTINUOUS FAN OPERATION IN OCCUPIED MODE
   d. DISABLE KEYBOARD PROGRAMMING
B. SET TIME AND DATE.
C. SET TO DISPLAY CURRENT TEMPERATURE.
D. SET OCCUPIED START TIME AT 30 MIN. BEFORE OPENING. SET UNOCCUPIED START TIME AT 30 MIN. AFTER CLOSING. VERIFY HOURS WITH STORE MANAGER OR CONSTRUCTION MANAGER.
E. SET POINTS SHALL BE AS FOLLOWS OR AS APPROPRIATE FOR CLIMATE:
   a. OCCUPIED (5° F DEADBAND) (3° C DEADBAND)
      - HEATING: 70° F (21° C)
      - COOLING: 75° F (24° C)
   b. UNOCCUPIED
      - HEATING: 60° F (15° C)
      - COOLING: 78° F (25° C)
F. SET TWO (2) HOUR OCCUPIED OVERRIDE FUNCTION TO PROVIDE THE FOLLOWING SET POINT OVERRIDES:
   a. HEATING: +2° F (1° C)
   b. COOLING: -2° F (1° C)

ENERGY MANAGEMENT SYSTEM (EMS)

A. THE GENERAL CONTRACTOR SHALL INSTALL (OR DEMO AND REINSTALL FOR RENOVATIONS) THE VENSTAR SURVEYOR EMS SYSTEMS PRIOR TO THE LAST WEEK OF CONSTRUCTION. MECHANICAL CONTRACTOR TO INSTALL ONE PERMANENT THERMOSTAT AND REMOTE SENSOR PER HVAC UNIT, AS PROVIDED BY VENSTAR. LOCATE AND MOUNT THERMOSTAT(S) AND SENSOR(S) PER THE DRAWINGS. INSTALL THERMOSTAT IDENTIFICATION LABELS PER VENSTAR SPECIFICATIONS.

B. MECHANICAL CONTRACTOR TO COMPLETE FINAL CONNECTIONS FROM SURVEYOR DATA CONCENTRATOR TO STORE ROUTER PRIOR TO CONTACTING VENSTAR (818-812-9812). VENSTAR TO PROGRAM THE HVAC AND/OR LIGHTING CONTROLS WITH STANDARD STARBUCKS SETTINGS. FOR ASSISTANCE WITH OR TROUBLESHOOTING OF THE SURVEYOR CONTROLS, CONTACT VENSTAR.

DUCTWORK AND ACCESSORIES

SHEET METAL DUCTWORK
SEE SPECIFICATIONS FOR SHEET METAL DUCT REQUIREMENTS. ALL EXPOSED DUCTWORK TO BE SPIRAL ROUND, OR RECTANGULAR LOCK-SEAM TYPE, AS SHOWN ON HVAC PLAN SHEET. ASSEMBLE AND INSTALL DUCTWORK IN ACCORDANCE WITH RECOGNIZED INDUSTRY PRACTICE FOR ACHIEVING AIR TIGHT (5% LEAKAGE) AND NOISELESS (NO OBJECTIONABLE NOISE) SYSTEMS, CAPABLE OF PERFORMING EACH INDICATED SERVICE. FURNISH AND INSTALL ALL REQUIRED DAMPERS, TRANSITIONS, CONNECTIONS TO AIR TERMINALS, AND OTHER ACCESSORIES NECESSARY FOR COMPLETE OPERATING SYSTEM. NO VARIATION OF DUCT CONFIGURATION OR SIZES WILL BE PERMITTED EXCEPT BY PERMISSION FROM THE ENGINEER.

DUCT SEALANT
SEAL ALL LONGITUDINAL AND TRANSVERSE JOINTS PER SPECIFICATIONS. COVER ALL FIELD JOINTS, JOINTS AROUND SPIN-IN FITTINGS, AND FASTENING SCREWS WITH MASTIC.

SUPPORTS
PROVIDE FASTENERS, ANCHORS, RODS, STRAPS, TRIM, AND ANGLES FOR SUPPORT OF DUCTWORK. SUPPORTS MUST COMPLY WITH LOCAL REGULATIONS AND CODE .

DAMPERS
PROVIDE VOLUME CONTROL DAMPERS WHERE INDICATED ON DRAWINGS AND AT POINTS ON LOW PRESSURE SUPPLY, RETURN, AND EXHAUST DUCTS WHERE BRANCHES ARE TAKEN FROM LARGER DUCTS. PROVIDE UL LISTED FIRE OR FIRE/SMOKE DAMPERS WHERE REQUIRED AND IN ACCORDANCE WITH NFPA AND LOCAL CODES. PROVIDE CONVENIENTLY LOCATED ACCESS DOORS OF AMPLE SIZE AND QUANTITY FOR SERVICING THE DAMPERS. PROVIDE MOTORIZED DAMPERS AT ALL INTAKE & EXHAUST BUILDING OPENINGS. COORDINATE WITH OTHER TRADES FOR ACCESS PANELS, POWER AND FIRE ALARM INTERFACES. SEE PROJECT MANUAL.

ACOUSTICAL DUCT LINER
UNLESS OTHERWISE INDICATED ON THE PLANS, PROVIDE 1" (25MM) ACOUSTICAL DUCT LINER IN SUPPLY AND RETURN DUCTWORK WITHIN 10'-0" (305CM) OF THE DISCHARGE AND INTAKE OF AIR HANDLING UNITS. INCREASE DUCT SIZE INDICATED ON PLANS AS NEEDED TO ACCOMMODATE LINER. LINER TO BE PROVIDED AND FASTENED TO DUCT WITH MECHANICAL LINER FASTENERS IN ACCORDANCE WITH SMACNA AND PROJECT MANUAL.

FLEXIBLE DUCTWORK
FLEXIBLE DUCT WORK SHALL ONLY BE INSTALLED AS SHOWN IN PLAN AND NOT ABOVE HARD LID CEILINGS. FLEXIBLE DUCTWORK SHALL NOT EXCEED 5'-0" (152CM) IN LENGTH AND TWO 45° ELBOWS. IT SHALL BE PULLED TAUT AND APPROPRIATELY FASTENED TO RIGID BRANCH DUCT & DIFFUSER. BENDS SHALL BE MINIMIZED AND WHERE NEEDED BE A FULL RADIUS BEND. SUPPORT BANDS SHALL BE INSTALLED SO AS TO NOT CRIMP FLEX DUCT. FLEXIBLE DUCTWORK SHALL MEET REQUIREMENTS.

HVAC EQUIPMENT AND MATERIALS

AIR HANDLING UNITS
AIR HANDLING UNITS SHALL BE AS SPECIFIED IN THE MECHANICAL SCHEDULE AND SHALL BE FURNISHED AND INSTALLED PER THE LEASE AGREEMENT. THE MECHANICAL CONTRACTOR IS RESPONSIBLE FOR COORDINATING DELIVERY, PROVIDING COMPLETE INSTALLATION INCLUDING CURBS, PIPING, VIBRATION ISOLATION, AND NECESSARY ACCESSORIES, AND PROVIDING WARRANTY.

FILTERS
IF OPERATING HVAC DURING CONSTRUCTION, PROVIDE THREE (3) SETS OF 2" (51MM) MERV6 PLEATED DISPOSABLE FILTERS (OR HIGHER RATING IF REQUIRED BY LEED). USE ONE SET UNTIL COMPLETION OF CONSTRUCTION. INSTALL ONE SET AT COMPLETION OF CONSTRUCTION (PRIOR TO TAB) AND DELIVER ONE SET OF MERV13 FILTERS TO STARBUCKS LABELED TO DENOTE THEIR RESPECTIVE AIR HANDLING UNIT.

EXHAUST FANS
EXHAUST FANS SHALL BE AS SPECIFIED AND PROVIDED PER THE LEASE AGREEMENT. THE MECHANICAL CONTRACTOR IS RESPONSIBLE FOR COORDINATING DISCHARGE LOCATION WITH NEW AND EXISTING VENTS AND INTAKES, PROVIDING COMPLETE INSTALLATION INCLUDING CURBS, BACKDRAFT DAMPER, DUCTWORK FROM RESTROOM GRILLE TO UNIT, NECESSARY ACCESSORIES AND PROVIDING WARRANTY.

BRACING AND ANCHORING
ALL MECHANICAL EQUIPMENT, FIXED OR FLEXIBLY MOUNTED, SHALL BE BRACED OR ANCHORED TO COMPLY WITH LOCAL CODES.

IAQ MANAGEMENT PLAN

DURING CONSTRUCTION, CONTRACTOR SHALL COMPLY WITH CHAPTER 3 OF SMACNA'S IAQ GUIDELINES FOR OCCUPIED BUILDINGS UNDER CONSTRUCTION. CONTRACTOR SHALL PERFORM AND SUBMIT ALL INFORMATION AS REQUIRED. IF HVAC SYSTEM IS TO BE USED DURING CONSTRUCTION, INSTALL MERV 8 FILTERS AT EACH RETURN AIR GRILL AND COMPLY WITH SMACNA'S GUIDELINES REFERENCED BELOW.

GENERAL MECHANICAL NOTES

A. MECHANICAL CONTRACTOR SHALL COORDINATE WITH THE GENERAL CONTRACTOR TO PATCH AND REPAIR ALL EXISTING WALLS, FLOORS, CEILINGS OR OTHER SURFACES IDENTIFIED TO REMAIN THAT MAY BECOME DAMAGED DURING THE COURSE OF WORK.

B. DRAWINGS ARE DIAGRAMMATIC AND INDICATE GENERAL INTENT OR ARRANGEMENT OF SYSTEM(S). FURNISH & INSTALL ALL COMPONENTS NEEDED WHETHER INDICATED OR NOT TO PROVIDE A COMPLETE AND OPERATING SYSTEM.

C. CONTRACTOR TO VERIFY ALL DIMENSIONS, INCLUDING CLEARANCES REQUIRED BY OTHER TRADES, AND NOTIFY STARBUCKS CONSTRUCTION MANAGER OF ANY DISCREPANCIES PRIOR TO PROCEEDING WITH THE WORK. ALL DIMENSIONS ARE TO THE FACE OF THE FINISHED SURFACE UNLESS NOTED OTHERWISE. ALL DIMENSIONS TO BE TAKEN FROM ACTUAL BUILDING DIMENSIONS.

D. THE MECHANICAL CONTRACTOR SHALL COORDINATE HVAC WORK WITH OTHER TRADES. THE ARCHITECTURAL DRAWINGS AND PROJECT MANUAL SHALL TAKE PRECEDENCE OVER ALL OTHER DRAWINGS. SEE ARCHITECTURAL DRAWINGS AND PROJECT MANUAL FOR DIMENSIONED DIFFUSER LOCATIONS AND MOUNTING HEIGHTS WHERE EXPOSED.

E. NEW DUCTWORK AND EQUIPMENT SHALL NOT BE INSTALLED WHERE IT OBSTRUCTS ANY EXISTING OR NEW AREAS THAT REQUIRE ACCESS.

TESTING, ADJUSTING, BALANCING

INDEPENDENT AIR BALANCE CONTRACTOR OR QUALIFIED MECHANICAL CONTRACTOR SHALL BE QUALIFIED BY NEBB OR AABC STANDARDS. BALANCER SHALL ACCURATELY BALANCE THE SUPPLY, RETURN AND OUTSIDE AIR, EXHAUST FAN(S), HYDRONIC (WHERE APPLICABLE) AND EXHAUST FAN(S) SYSTEMS TO PROVIDE AIR AND WATER QUANTITIES WITHIN 10% PLUS MINUS OF THE VALUES INDICATED ON THE DRAWINGS AND IN THE SPECIFICATIONS UNLESS MANUFACTURER REQUIRES TIGHTER TOLERANCES. OPERATE AUTOMATIC CONTROLS SYSTEMS AND VERIFY SETPOINTS FOR THERMOSTATS, C02 SENSORS, DCV, EMS AND ECONOMIZER/OUTSIDE AIR DAMPER. SEE CONTROLS AND OPERATION NOTES AND HVAC SCHEDULES AND NOTES FOR DETAILS. IF DEFICIENCIES OR SITE CONDITIONS PREVENT COMPLETE AND PROPER BALANCING, DO NOT COMPLETE WORK AND SUBMIT A REQUEST FOR INFORMATION TO GET COMPLETE INFORMATION PRIOR TO COMPLETING WORK. SUBMIT THREE (3) COPIES OF THE BALANCE REPORT TO THE ENGINEER, CONSTRUCTION MANAGER AND COMMISSIONING AGENT FOR APPROVAL. THE BALANCE REPORT SHALL INCLUDE NEBB OR AABC CREDENTIALS, EQUIPMENT/INSTRUMENT LIST WIT THE MOST RECENT CALIBRATION DATE AND BALANCE REPORTS FOR ALL HVAC AND EXHAUST SYSTEMS. T&B REPORT SHOULD MATCH NEBB OR AABC STANDARD REPORTS INCLUDING UNIT TEST DATA WITH TEMPERATURES, PRESSURES AND STATIC PRESSURE PROFILES. INCLUDE A COPY OF THE BALANCE REPORT AS APPROVED BY THE ENGINEER WITH APPLICATION FOR FINAL CONTRACT PAYMENT.

HVAC LOAD CALCULATION

Air System Sizing Summary for AHU Overall

Project Name: SBUX US 98 and Griffin — 10/28/2022
Prepared by: CHANGE UP INC — 02:24PM

Air System Information

Air System Name	AHU Overall		Number of zones	1
Equipment Class	PKG ROOF		Floor Area	2480.0 ft²
Air System Type	SZCAV		Location	Tampa, Florida

Sizing Calculation Information

Calculation Months	Jan to Dec		Zone CFM Sizing	Sum of space airflow rates
Sizing Data	Calculated		Space CFM Sizing	Individual peak space loads

Central Cooling Coil Sizing Data

Total coil load	19.8	Tons	Load occurs at	Jun 1500	
Total coil load	237.5	MBH	OA DB / WB	91.0 / 77.0	°F
Sensible coil load	156.7	MBH	Entering DB / WB	76.6 / 67.1	°F
Coil CFM at Jun 1500	8000	CFM	Leaving DB / WB	58.4 / 57.6	°F
Max block CFM	8000	CFM	Coil ADP	56.4	°F
Sum of peak zone CFM	8000	CFM	Bypass Factor	0.100	
Sensible heat ratio	0.660		Resulting RH	61	%
CFM/Ton	404.3		Design supply temp.	57.5	°F
ft²/Ton	125.3		Zone T-stat Check	1 of 1	OK
BTU/(hr·ft²)	95.7		Max zone temperature deviation	0.0	°F
Water flow @ 10.0 °F rise	N/A				

Central Heating Coil Sizing Data

Max coil load	37.8	MBH	Load occurs at	Des Htg	
Coil CFM at Des Htg	8000	CFM	BTU/(hr·ft²)	15.2	
Max coil CFM	8000	CFM	Ent. DB / Lvg DB	65.6 / 70.0	°F
Water flow @ 20.0 °F drop	N/A				

Supply Fan Sizing Data

Actual max CFM	8000	CFM	Fan motor BHP	5.50	BHP
Standard CFM	7997	CFM	Fan motor kW	4.56	kW
Actual max CFM/ft²	3.23	CFM/ft²			

Outdoor Ventilation Air Data

Design airflow CFM	995	CFM	CFM/person	16.58	CFM/person
CFM/ft²	0.40	CFM/ft²			

WORK DESCRIPTION	RESPONSIBILITY	
	LANDLORD	STARBUCKS
HVAC UNITS, CURB AND STRUCTURAL	X	
HVAC UNIT ECONOMIZERS AND RELIEF	X	
SMOKE DETECTORS IN DUCTWORK AND INTERLOCK	X	
THERMOSTATS AND CONTROLS	X	X
EMS CONTROLS		X
MOTORIZED DAMPERS FOR BACKDRAFT	X	
EXHAUST FAN, CURB AND MOTORIZED DAMPER	X	X
AIR DEVICES		X
DUCTWORK 12" OR LARGER		X
DUCTWORK 10" OR SMALLER		X
DAMPERS FOR CONNECTIONS		X
GAS SERVICE AND METER	N/A	N/A
GAS PIPING AND SPACE	N/A	N/A
GAS PIPING TO HOT WATER TANK	N/A	N/A
GAS PIPING TO HVAC UNITS	N/A	N/A
LOUVERS FOR INTAKES, EXHAUST AND PRESSURE RELIEF	N/A	N/A

LANDLORD REQUIREMENTS

PRIOR TO BID:
THE GENERAL CONTRACTOR SHALL COORDINATE WITH LANDLORD / BUILDING OWNER FOR ANY CONSTRUCTION REQUIREMENTS. IF LANDLORD / BUILDING OWNER DOES HAVE REQUIREMENTS, CONTRACTOR SHALL BECOME COMPLETELY FAMILIAR WITH REQUIREMENTS AND ADHERE TO THEM. WHERE LANDLORD / BUILDING OWNER REQUIREMENTS ARE MORE STRINGENT THAN SHOWN IN THESE PLANS (IN THE OPINION OF THE ENGINEER). LANDLORD / BUILDING OWNER REQUIREMENTS SHALL GOVERN.

FOR CONSTRUCTION

© 2019 STARBUCKS COFFEE COMPANY

STARBUCKS®
2401 UTAH AVENUE SOUTH
SEATTLE, WASHINGTON 98134
(206) 318-1575

THESE DRAWINGS AND THE PROJECT MANUAL ARE CONFIDENTIAL AND SHALL REMAIN THE SOLE PROPERTY OF STARBUCKS CORPORATION, WHICH IS THE OWNER OF THE COPYRIGHT IN THIS WORK. THEY SHALL NOT BE REPRODUCED (IN WHOLE OR IN PART), SHARED WITH THIRD PARTIES OR USED IN ANY MANNER ON OTHER PROJECTS OR EXTENSIONS TO THIS PROJECT WITHOUT THE PRIOR WRITTEN CONSENT OF STARBUCKS CORPORATION. THESE DRAWINGS AND SPECIFICATIONS ARE INTENDED TO EXPRESS DESIGN INTENT FOR A PROTOTYPICAL STARBUCKS STORE (WHICH IS SUBJECT TO CHANGE AT ANYTIME) AND DO NOT REFLECT ACTUAL SITE CONDITIONS. NEITHER PARTY SHALL HAVE ANY OBLIGATION NOR LIABILITY TO THE OTHER (EXCEPT STATED ABOVE) UNTIL A WRITTEN AGREEMENT IS FULLY EXECUTED BY BOTH PARTIES.

STARBUCKS TEMPLATE VERSION: i2021-09-13

Design Forum Architects Inc.
2056 Byers Rd, Miamisburg, OH 45342, Tel: (844) 804-7700
Donald J. Rethman, Architect In Charge, License: AR00017303

Design Forum Engineering
2056 Byers Rd, Miamisburg, OH 45342, Tel: (844) 804-7700
Timothy L. Raberding, PE, Professional Engineer, License: 62078

PROJECT NAME: US 98 & GRIFFIN RD

PROJECT ADDRESS: 3105 US-98 NORTH, LAKELAND, FLORIDA 33801

STORE #:	80004
PROJECT #:	96892-001
ISSUE DATE:	2025-09-26
DESIGN MANAGER:	ASHLEY ASUEIRAS
PRODUCTION DESIGNER:	ANDY MCLOUD
CHECKED BY:	DONALD RETHMAN

Revision Schedule

Rev	Date	Description

SHEET TITLE: MECHANICAL NOTES

SCALE:

SHEET NUMBER: M001

10/9/2025 10:54:57 AM Autodesk Docs://US 98 and Griffin - Starbucks/TI_US 98 & Griffin Rd-MEP_R25_permit.rvt

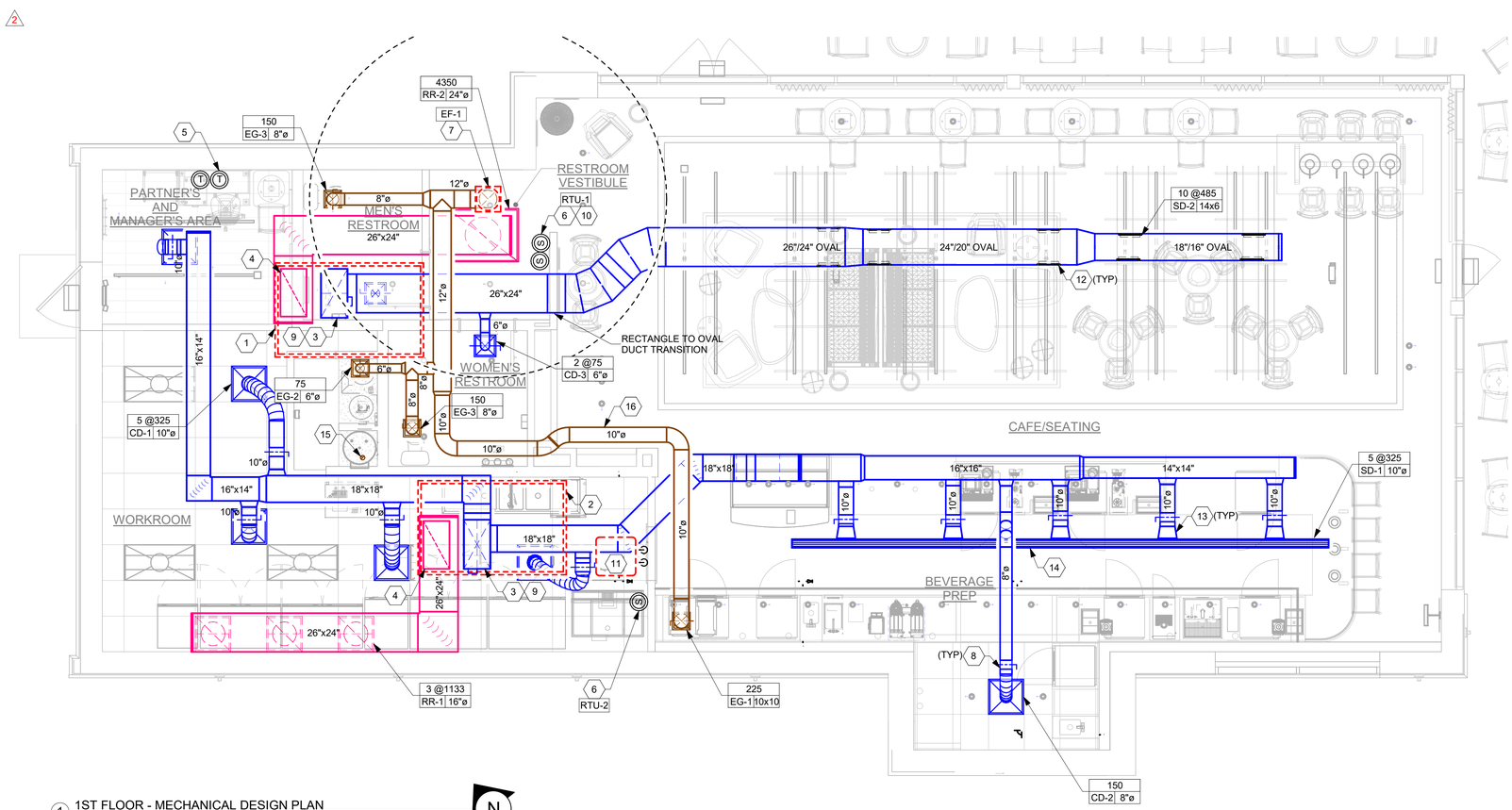

1 1ST FLOOR - MECHANICAL DESIGN PLAN
1/4" = 1'-0"

Scale: 1/4" = 1'-0"

GENERAL NOTES

A. SEE SHEETS M601 FOR EQUIPMENT AND AIR DEVICE SCHEDULES.

B. MECHANICAL CONTRACTOR RESPONSIBLE FOR SITE INVESTIGATION PRIOR TO START OF WORK TO REVEAL FULL SCOPE OF PROJECT.

C. COORDINATE WITH ELECTRICAL CONTRACTOR FOR POWER CONNECTIONS TO ALL MECHANIC EQUIPMENT.

D. DUCTWORK ABOVE CEILINGS SHALL BE ROUTED AS HIGH AS POSSIBLE. REFER TO CEILING PLANS AND SECTIONS FOR HEIGHT OF EXPOSED DUCTWORK.

E. CONTRACTOR SHALL INSTALL REFRIGERANT PIPING TO/FROM REMOTE CONDENSER FOR ICE CREAM AND/OR WALK IN COOLERS.

F. SEE ARCHITECTURE SHEETS FOR PAINTING AND COLORS OF ALL EXPOSED DUCTWORK, DIFFUSER AND GRILLES.

G. SEE ARCHITECTURE SHEETS FOR DIMENSIONED DIFFUSER & EXPOSED DUCT LOCATIONS.

KEYED NOTES

1 EXISTING ROOFTOP UNIT (RTU-1) WITH SMOKE DETECTOR IN SUPPLY AIR DUCT.

2 EXISTING ROOFTOP UNIT (RTU-2) WITH SMOKE DETECTOR IN SUPPLY AIR DUCT.

3 FULL SIZE SUPPLY AIR DUCT WITH 1-1/2" DUCT LINER, SEE EXPOSED DUCTWORK SECTION OF SPECIFICATION FOR OPTIONAL COMBINATION THERMAL/ACOUSTICAL INSULATION WITHIN DOUBLE WALL DUCT AS AN ALTERNATIVE TO DUCT LINER.

4 FULL SIZE RETURN AIR DUCT WITH 1-1/2" DUCT LINER, SEE EXPOSED DUCTWORK SECTION OF SPECIFICATION FOR OPTIONAL COMBINATION THERMAL/ACOUSTICAL INSULATION WITHIN DOUBLE WALL DUCT AS AN ALTERNATIVE TO DUCT LINER.

5 WALL MOUNTED THERMOSTATS FOR ROOFTOP AC UNITS. MULTIPLE THERMOSTATS SHALL BE STACKED IN VERTICAL CONFIGURATION WITH A MINIMUM 8".

6 REMOTE TEMPERATURE SENSOR.

7 12" DIAMETER EXHAUST DUCT UP TO EXISTING EXHAUST FAN EF-1. 10' CLEARANCE RADIUS BETWEEN EXHAUSTED DISCHARGE AND OUTDOOR INTAKE IS SHOWN WITH DASHED CIRCLE. EXHAUST DUCT TO RUN IN JOIST SPACE.

8 MANUAL BALANCE DAMPER (TYPICAL).

9 EXISTING SMOKE DETECTOR IN SUPPLY AIR SYSTEM TO SHUT DOWN UNIT UPON DETECTION BY LANDLORD UNDER SEPARATE PERMIT.

10 PROVIDE MOUNTED CO2 SENSOR COMPATIBLE WITH ROOFTOP UNIT AT 60" AFF. FIELD VERIFY ALL REQUIREMENTS. CO2 SET POINTS: 100% DESIGN OA RATE = 1000PPM FOR EQC2 CREDIT SET POINT= 800 PPM.

11 AIR COOLED CONDENSER UNIT ON ROOF FOR ICE MACHINE BELOW. SET UNIT ON APPROVED ROOFCURB PROVIDED BY THE LANDLORD.EXTEND REFRIGERENT PIPING TO ICE MACHINE. SEAL ROOF OPENING WEATHERTIGHT. REFER TO DETAIL #1 & #5 ON SHEET M-501. FIELD VERIFY ALL REQUIREMENTS AND INCLUDE ALL COST IN BIDS FOR A COMPLETE SYSTEM.

12 PAINT DIFFUSER TO MATCH COLOR OF CEILING. CORDINATE WITH OWNER. FIELD VERIFY ALL REQUIREMENTS.

13 PROVIDE 10" OR 12" TAP AND DUCTWORK, TRANSITION TO OVAL AT PLENUM BOX. PROVIDE YOUNG REGULATOR, CABLE DAMPER WITH PLENUM CABLE CONTROLLER WITH PHILLIPS HEAD ADJUSTMENT FOR LINEAR SLOT.

14 PROVIDE (1) CONTINUOUS LINEAR SLOT AS SHOWN ON PLANS. PROVIDE PLENUM BOXES FOR SUPPLY AIR CONNECTION AS SHOWN. REFER TO SHEET M-601 AIR DEVICE SCHEDULE.

15 3" COMBUSTION AIR INTAKE TO TANKLESS WATER HEATER BELOW. PIPING MATERIAL AS RECOMMENDED BY WATER HEATER MANUFACTURER FOR USE IN A RETURN AIR PLENUM. FIELD VERIFY LOCATION. EXTEND AIR INTAKE PIPE MINIMUM 12" ABOVE ROOF DECK. PROVIDE 180 DEGREE INTAKE ELBOW WITH SCREEN ON TOP OF AIR INTAKE.

16 RUN DUCTWORK THRU JOIST SPACE OR JOIST WEBS WHERE POSSIBLE. FILED VERIFY ROUTING AND ALL REQUIREMENTS.

FOR CONSTRUCTION

© 2019 STARBUCKS COFFEE COMPANY

STARBUCKS®
2401 UTAH AVENUE SOUTH
SEATTLE, WASHINGTON 98134
(206) 318-1575

THESE DRAWINGS AND THE PROJECT MANUAL ARE CONFIDENTIAL AND SHALL REMAIN THE SOLE PROPERTY OF STARBUCKS CORPORATION, WHICH IS THE OWNER OF THE COPYRIGHT IN THIS WORK. THEY SHALL NOT BE REPRODUCED (IN WHOLE OR IN PART), SHARED WITH THIRD PARTIES OR USED IN ANY MANNER ON OTHER PROJECTS OR EXTENSIONS TO THIS PROJECT WITHOUT THE PRIOR WRITTEN CONSENT OF STARBUCKS CORPORATION. THESE DRAWINGS AND SPECIFICATIONS ARE INTENDED TO EXPRESS DESIGN INTENT FOR A PROTOTYPICAL STARBUCKS STORE (WHICH IS SUBJECT TO CHANGE AT ANYTIME) AND DO NOT REFLECT ACTUAL SITE CONDITIONS. NEITHER PARTY SHALL HAVE ANY OBLIGATION NOR LIABILITY TO THE OTHER (EXCEPT STATED ABOVE) UNTIL A WRITTEN AGREEMENT IS FULLY EXECUTED BY BOTH PARTIES.

STARBUCKS TEMPLATE VERSION: i2021-09-13

Design Forum Architects Inc.
2056 Byers Rd
Miamisburg, OH 45342
Tel: (844) 804-7700
Donald J. Rethman
Architect In Charge
License: AR00017303

Design Forum Engineering
2056 Byers Rd
Miamisburg, OH 45342
Tel: (844) 804-7700
Timothy L. Raberding, PE
Professional Engineer
License: 62078

PROJECT NAME:
US 98 & GRIFFIN RD

PROJECT ADDRESS:
3105 US-98 NORTH
LAKELAND, FLORIDA 33801

STORE #:	80004
PROJECT #:	96892-001
ISSUE DATE:	2025-09-26
DESIGN MANAGER:	ASHLEY ASUEIRAS
PRODUCTION DESIGNER:	ANDY MCLOUD
CHECKED BY:	DONALD RETHMAN

Revision Schedule

Rev	Date	Description
2	10/3/25	Revision 2

SHEET TITLE:
MECHANICAL DESIGN PLAN
SCALE:

SHEET NUMBER:
M101

10/9/2025 10:56:01 AM Autodesk Docs://US 98 and Griffin - Starbucks/TI_US 98 & Griffin Rd-MEP_R25_permit.rvt

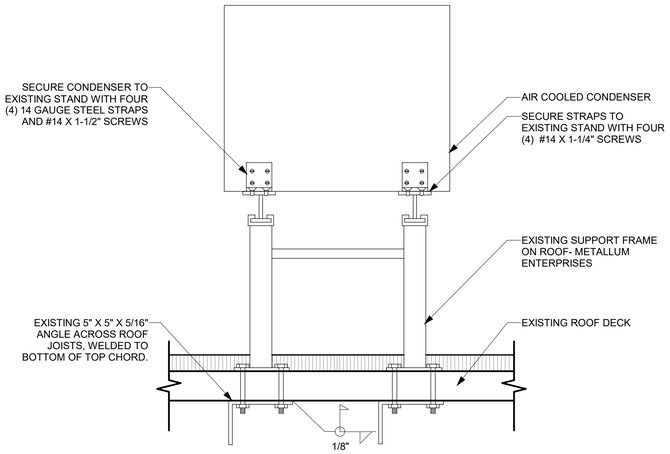

1 CONDENSER SUPPORT DETAIL
N.T.S.

Specification, condenser unit 23181

W1 Width	30.00" (76.2 cm) – all models
D1 Depth (hail guard included)	38.50" (97.8 cm) – all models
H1 Height	25.75" (66.3 cm) – all models
Electrical (single phase)	208-230/60/1
Electrical (three phase)	208-230/60/3
Operating power (single phase)	2891 Watts
Operating power (three phase)	2188 Watts
Minimum circuit ampacity	single phase 27.1 A three phase 19.9 A
Maximum overcurrent protection	single phase 45 A three phase 30 A
Outdoor condensing unit operating limits (air temperature)	min -20 F (-29 C) max 120 F (49 C)
Maximum refrigerant line run length	75' (30.5 m)
Maximum line rise above evaporator	35' (10.7 m)
Evaporator mounting above condenser	15' (4.6 m)
Maximum refrigeration line drop without oil trap	15' (4.6 m)
Refrigerant charge	14.5 lb required at installation
Approximate ship weight	305 lb (138 kg)

NOTE:
1. The entire liquid line and suction line should be insulated fully, and separately from each other.

2

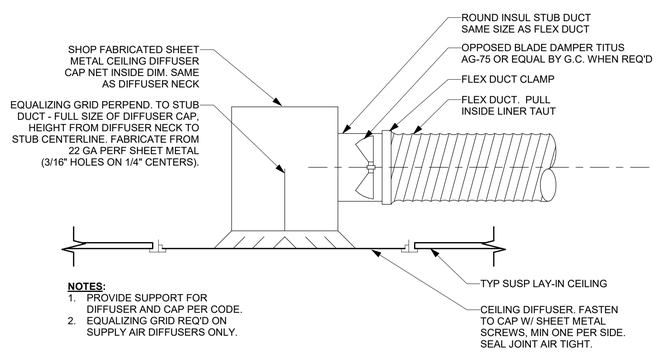

NOTES:
1. PROVIDE SUPPORT FOR DIFFUSER AND CAP PER CODE.
2. EQUALIZING GRID REQ'D ON SUPPLY AIR DIFFUSERS ONLY.

3 LAY IN DIFFUSER
N.T.S.

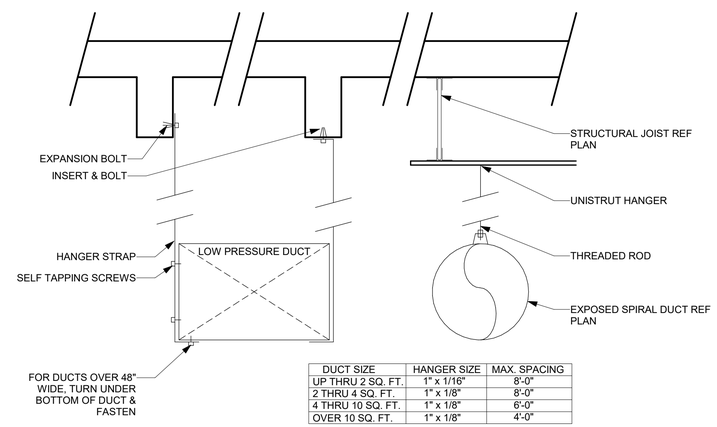

DUCT SIZE	HANGER SIZE	MAX. SPACING
UP THRU 2 SQ. FT.	1" x 1/16"	8'-0"
2 THRU 4 SQ. FT.	1" x 1/8"	8'-0"
4 THRU 10 SQ. FT.	1" x 1/8"	6'-0"
OVER 10 SQ. FT.	1" x 1/8"	4'-0"

4 DUCT HANGING DETAIL
N.T.S.

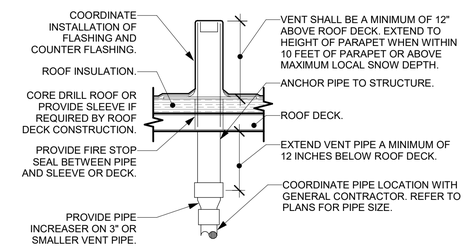

NOTES:
LOCATE VENT THRU ROOF MINIMUM 3 FEET FROM PROPERTY LINE, 10 FEET HORIZONTAL OR 3 FEET VERTICAL ABOVE ANY BUILDING OPENING OR FRESH AIR INTAKE, 25 FEET FROM ANY OPENING OR FRESH AIR INTAKE IN MEDICAL FACILITIES AND 1 FOOT FROM ANY VERTICAL SURFACE. REFER TO LOCAL CODES FOR OTHER VENT TERMINATION REQUIREMENTS. LOCATE VENT THRU ROOF A MINIMUM 18" FROM ADJACENT WALL(S), PARAPET, EXPANSION JOINT, ROOF DRAIN, EQUIPMENT CURB, OR OTHER ROOF FEATURE. OFFSET IN CEILING SPACE WHERE REQUIRED TO MEET THESE CONDITIONS.

6 VENT THRU ROOF
N.T.S.

2

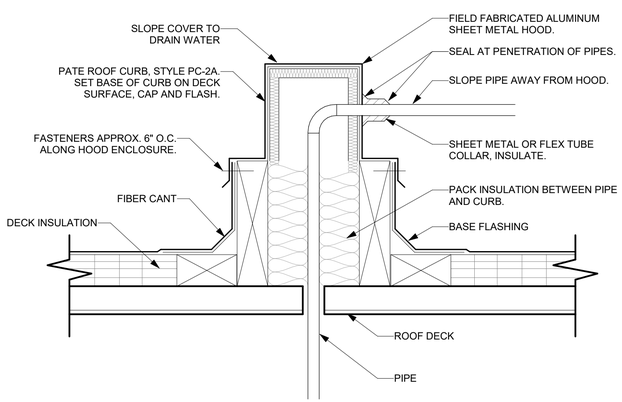

5 PIPE ROOF CURB DETAIL
N.T.S.

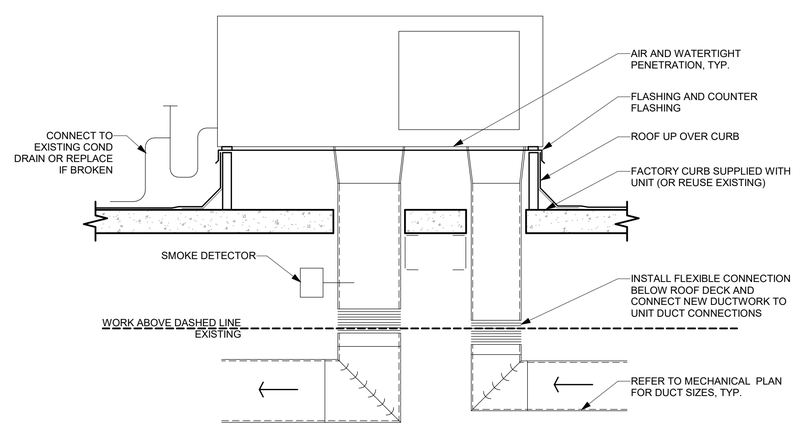

2 RTU DETAIL
N.T.S.

FOR CONSTRUCTION

© 2019 STARBUCKS COFFEE COMPANY

STARBUCKS®
2401 UTAH AVENUE SOUTH
SEATTLE, WASHINGTON 98134
(206) 318-1575

THESE DRAWINGS AND THE PROJECT MANUAL ARE CONFIDENTIAL AND SHALL REMAIN THE SOLE PROPERTY OF STARBUCKS CORPORATION, WHICH IS THE OWNER OF THE COPYRIGHT IN THIS WORK. THEY SHALL NOT BE REPRODUCED (IN WHOLE OR IN PART), SHARED WITH THIRD PARTIES OR USED IN ANY MANNER ON OTHER PROJECTS OR EXTENSIONS TO THIS PROJECT WITHOUT THE PRIOR WRITTEN CONSENT OF STARBUCKS CORPORATION. THESE DRAWINGS AND SPECIFICATIONS ARE INTENDED TO EXPRESS DESIGN INTENT FOR A PROTOTYPICAL STARBUCKS STORE (WHICH IS SUBJECT TO CHANGE AT ANYTIME) AND DO NOT REFLECT ACTUAL SITE CONDITIONS. NEITHER PARTY SHALL HAVE ANY OBLIGATION NOR LIABILITY TO THE OTHER (EXCEPT STATED ABOVE) UNTIL A WRITTEN AGREEMENT IS FULLY EXECUTED BY BOTH PARTIES.

STARBUCKS TEMPLATE VERSION: i2021-09-13

Design Forum Architects Inc.
2056 Byers Rd
Miamisburg, OH 45342
Tel: (844) 804-7700
Donald J. Rethman
Architect In Charge
License: AR00017303

Design Forum Engineering
2056 Byers Rd
Miamisburg, OH 45342
Tel: (844) 804-7700
Timothy L. Raberding, PE
Professional Engineer
License: 62078

PROJECT NAME:
US 98 & GRIFFIN RD

PROJECT ADDRESS:
3105 US-98 NORTH
LAKELAND, FLORIDA 33801

STORE #:	80004
PROJECT #:	96892-001
ISSUE DATE:	2025-09-26
DESIGN MANAGER:	ASHLEY ASUEIRAS
PRODUCTION DESIGNER:	ANDY MCLOUD
CHECKED BY:	DONALD RETHMAN

Revision Schedule

Rev	Date	Description
2	10/3/25	Revision 2

SHEET TITLE:
MECHANICAL DETAILS

SCALE:

SHEET NUMBER:
M501

10/9/2025 10:54:11 AM Autodesk Docs://US 98 and Griffin - Starbucks/TI_US 98 & Griffin Rd-MEP_R25_permit.rvt

AIR DISTRIBUTION DEVICES

TYPE	DESCRIPTION	VOLUME CONTROL	FINISH	TITUS MODEL NO. OR AS NOTED	PROVIDED BY
CD-1	CEILING SUPPLY DIFFUSER	Yes	WHITE	MODEL TDC, LAY-IN, 24"x24", 4-WAY	CONTRACTOR
CD-2	CEILING SUPPLY DIFFUSER	Yes	WHITE	MODEL TDC, SURFACE, 24"x24", 4-WAY	CONTRACTOR
CD-3	CEILING SUPPLY DIFFUSER	Yes	WHITE	MODEL TDC, SURFACE, 12"x12", 4-WAY	CONTRACTOR
EG-1	CEILING EXHAUST GRILLE	Yes	WHITE	MODEL 350RL, SURFACE, 10"x10", 10" INLET	CONTRACTOR
EG-2	CEILING EXHAUST GRILLE	Yes	WHITE	MODEL 350RL, SURFACE, 10"x10", 6" INLET	CONTRACTOR
EG-3	CEILING EXHAUST GRILLE	Yes	WHITE	MODEL 350RL, SURFACE, 10"x10", 8" INLET	CONTRACTOR
RR-1	CEILING RETURN GRILLE	Yes	WHITE	MODEL 350RL, LAY-IN, 24"x24"	CONTRACTOR
RR-2	CEILING RETURN GRILLE	Yes	WHITE	MODEL 350RL, LAY-IN, 48"x36"	CONTRACTOR
SD-1	CEILING LINEAR SUPPLY DIFFUSER	Yes	WHITE	MODEL ML38, 30 FT LONG, (3) 3/4" SLOTS, PROVIDE WITH MPI-38, 10" INLET, BORDER 22, H3 HARD CEILING CLIPS AND EXC END CAPS.	CONTRACTOR
SD-2	DUCT MOUNTED SIDEWALL DIFFUSERS	Yes	WHITE	MODEL S300FS, SURFACE, 14"x6"	CONTRACTOR

NOTES:
1. COORDINATE MOUNTING TYPES WITH ARCHITECTURE CEILING AND WALL TYPES, AND SEE NECK SIZES ON PLANS.

EXHAUST FAN SCHEDULE (EXISTING BY LANDLORD UNDER SEPARATE PERMIT)

UNIT NO.	TYPE	CFM	S.P.	SONES	HP	VOLT/PH	FAN SPEED	WEIGHT LBS.	MANUFACTURER	MODEL	CONTROL	REMARKS
EF-1	ROOF	600	0.4	0.7	1.01	120/1	1649	39	GREENHECK	G-095-VG	No	1,2,3

NOTES:
1. FAN TO BE CONTROLLED BY LIGHTING CONTROL PANEL TO RUN CONTINUOUSLY IN OCCUPIED MODE. SEE DETAILS ON E-503.
2. FAN TO BE PROVIDED WITH SPEED CONTROLLER AND BACKDRAFT DAMPER.
3. EXT. STATIC PRESSURE INCLUDES DUCTWORK, BACKDRAFT DAMPER, AND AIR DEVICES.

VENTILATION SCHEDULE

SPACE NAME	AREA	OCCUPANCY PER 1000 SF	OCCUPANT LOAD	OUTDOOR AIR PER PERSON	OCCUPANT OUTDOOR AIR	OUTDOOR AIR PER SQ. FT.	AREA OUTDOOR AIR	BASE OUTDOOR AIR REQUIRED	VENT EFFICIENCY	TOTAL OUTDOOR AIR REQUIRED	SERVED BY
CAFE/SEATING (DINING ROOM)	1052 SF	70	54	7.5 CFM	405 CFM	0.18 CFM/SF	189 CFM	594 CFM	0.8	743 CFM	RTU-1
BEV. PREP. (RETAIL SALES)	475 SF	15	3	7.5 CFM	22.5 CFM	0.12 CFM/SF	57 CFM	79 CFM	0.8	99 CFM	RTU-2
WORKROOM	426 SF	10	2	5 CFM	10 CFM	0.12 CFM/SF	51 CFM	61 CFM	0.8	76 CFM	RTU-2
MEN'S RESTROOM	56 SF	0	0	5 CFM	0 CFM	0.06 CFM/SF	3 CFM	3 CFM	0.8	4 CFM	RTU-1
WOMEN'S RESTROOM	61 SF	0	0	5 CFM	0 CFM	0.06 CFM/SF	4 CFM	4 CFM	0.8	5 CFM	RTU-1
RESTROOM VESTIBULE	56 SF	0	0	5 CFM	0 CFM	0.06 CFM/SF	3 CFM	3 CFM	0.8	4 CFM	RTU-1
PARTNER AREA	91 SF	0	0	5 CFM	0 CFM	0.12 CFM/SF	11 CFM	11 CFM	0.8	14 CFM	RTU-1
TOTAL: 7	2218 SF		59					756 CFM		945 CFM	

NOTES:
1. SET OUTSIDE AIR AS CALLED OUT ON THE RTU SCHEDULE.
2. OUTSIDE AIR BASED ON CODE OCCUPANCY LISTED ON SHEET G-0001 AND ON 2 PEOPLE IN BEV. PREP(RETAIL SALES) AREA TO MEET LEED REQUIREMENTS.

2

ENERGY MANAGEMENT SYSTEM (EMS) DEVICES

QUANTITY	DESCRIPTION	RESPONSIBILITY	COMMENTS
1	VENSTAR DC400, DATA CONCENTRATOR	CONTRACTOR	LOCATE AT MANAGER'S WORK STATION. LOCATION SHOWN ON SHEET E-501, DETAIL 2.
2	VENSTAR ECP400, EQUIPMENT CONTROL PACK	CONTRACTOR	LOCATE AT EACH HVAC UNIT. LOCATION OF HVAC UNITS SHOWN ON SHEET M-101.
2	VENSTAR CT414, COMMUNICATING THERMOSTAT	CONTRACTOR	LOCATE BY MANAGER'S WORK STATION AS SHOWN ON M-101 AND E-103. COORDINATE LOCATION WITH STARBUCKS' EQUIPMENT.
2	VENSTAR RS410, WALL MOUT REMOTE TEMPERATURE SENSOR	CONTRACTOR	LOCATE AS SHOWN ON M-101, ONE PER HVAC UNIT. COORDINATE LOCATION WITH STARBUCKS' ART, EQUIP.; PROJECT MANAGER.
0	VENSTAR RS420, OPTIONAL NARROW DROP DOWN SENSOR	CONTRACTOR	OPTIONAL SENSOR FOR WORKROOM. USE AS LAST RESORT ONLY IF NO SPACE EXISTS FOR WALL MOUNT TEMPERATURE SENSOR.
1	VENSTAR OTS400, OUTDOOR TEMPERATURE SENSOR	CONTRACTOR	LOCATE ON ROOF IN SHADED LOCATION ON NORTH SIDE OF BUILDING.
1	VENSTAR SP400, SENSOR PAC	CONTRACTOR	LOCATE COMPONENTS (AIRFLOW & TEMP SENSORS) PER SP400 SENSOR PAC INSTALLATION INSTRUCTIONS.

NOTES:
1. SURVEYOR ENERGY MANAGEMENT SYSTEM HARDWARE IS SUPPLIED BY STARBUCKS.
2. DRAWING FOR GENERAL INFROMATION, DESIGN INTENT AND COORDINATION ONLY.

AC UNIT SCHEDULE (EXISTING BY LANDLORD UNDER SEPARATE PERMIT)

UNIT NO.	SUPPLY CFM	O.A. CFM	TOTAL COOLING (TONS)	SENSIBLE COOLING (MBH)	HEATING CAP		ENTERING AIR CONDITIONS			EXT S.P., " W.C.	FAN HP	VOLT/PH	MCA	MOCP	E.E.R.	WEIGHT LBS.	MANUFACTURER	MODEL NUMBER	REMARKS
					INPUT (KW)	OUTPUT (MBH)	DB °F	WB °F	AMB °F										
RTU-1	5000	800	12.5	113.1	13.5	46.1	77.5	64.1	95	0.8	.5	208/3	64	90	12.1	2524	TRANE	THD150G3	1,2,3,4,5,6,7,8,9,10,11,12,13
RTU-2	3400	400	8.5	78.58	13.5	46.1	77.5	64.1	95	0.8	3.75	208/3	60	70	12.5	1172	TRANE	THC102F3	1,2,3,4,5,6,7,8,9,10,11,12,13

2 2 2

NOTES:
1. UNITS SHALL BE FURNISHED WITH MERV8 REPLACEBLE MEDIA FILTERS .
2. FIELD VERIFY FULL SIZE CONDENSATE DRAIN LINE TO ROOF GUTTER.
3. FIELD VERIFY SMOKE DETECTOR IN SUPPLY AIR DUCT DROP.
4. FIELD VERIFY MANUFACTUR'S STANDARD 14" HIGH FULL UNIT CURB TO MATCH ROOF SLOPE.
5. FIELD VERIFY CONVENIENCE OUTLET.
6. UNITS SHALL HAVE ECONOMIZER WITH BAROMETRIC RELIEF AND DIFFERENTIAL ENTHALPY CONTROLS. ECONOMIZER CONTROLS SHALL HAVE FAULT DETECTION AND DIAGONISTIC CAPABILITIES MATCHING REQUIREMENTS OF 2022 FBC-MECH C403.2.4.7.
7. PROVIDE VENSTAR SURVEYOR MODEL CT414 PROGRAMMABLE TWO STAGE THERMOSTAT WITH REMOTE TEMPERATURE SENSOR.
8. FIELD VERIFY INTGERAL DISSCONNECT SWITCH.
9. ROOFTOP UNIT SHALL BE TESTED AND OPERABLE AND HAVE A ONE (1) YEAH COMPLETE UNIT WARRANTY AND A FIVE (5) YEAR COMPRESSOR WARRANTY.
10. FIELD VERIFY HAIL GUARDS PROVIDED OVER CONDENSER COILS.
11. FIELD VERIFY PROVIDED SEA SALT SPRAY PROTECTION ON CONDENSER COILS.
12. FIELD VERIFY 2 SPEED EVAPORATOR FAN MOTOR
13. PROVIDE DEMAND CONTROL VENTILATION CO2 SENSOR IN RETURN AIR DUCT WITH CONTROLS COMPETIBLE WITH ECONOMIZER SYSTEM.

ELECTRICAL / MECHANICAL COORDINATION NOTES

A. PROVIDE AND COORDINATE LINE VOLTAGE WIRING, LINE VOLTAGE CONTROL AND INTERLOCK WIRING FOR MECHANICAL SYSTEM, AND LOW VOLTAGE CONTROL WIRING.

B. FURNISH WIRING DIAGRAMS TO THE ELECTRICIAN AS REQUIRED FOR PROPER EQUIPMENT HOOKUP. COORDINATE WITH THE ELECTRICIAN THE ACTUAL WIRE SIZING AMPS FOR MECHANICAL EQUIPMENT (FROM THE EQUIPMENT NAMEPLATE) TO ENSURE PROPER INSTALLATION.

REFERENCE SHELL PERMIT #BLD24-08354 FOR EXISTING WORK BY LANDLORD

2

FOR CONSTRUCTION

© 2019 STARBUCKS COFFEE COMPANY

STARBUCKS®
2401 UTAH AVENUE SOUTH
SEATTLE, WASHINGTON 98134
(206) 318-1575

THESE DRAWINGS AND THE PROJECT MANUAL ARE CONFIDENTIAL AND SHALL REMAIN THE SOLE PROPERTY OF STARBUCKS CORPORATION, WHICH IS THE OWNER OF THE COPYRIGHT IN THIS WORK. THEY SHALL NOT BE REPRODUCED (IN WHOLE OR IN PART), SHARED WITH THIRD PARTIES OR USED IN ANY MANNER ON OTHER PROJECTS OR EXTENSIONS TO THIS PROJECT WITHOUT THE PRIOR WRITTEN CONSENT OF STARBUCKS CORPORATION. THESE DRAWINGS AND SPECIFICATIONS ARE INTENDED TO EXPRESS DESIGN INTENT FOR A PROTOTYPICAL STARBUCKS STORE (WHICH IS SUBJECT TO CHANGE AT ANYTIME) AND DO NOT REFLECT ACTUAL SITE CONDITIONS. NEITHER PARTY SHALL HAVE ANY OBLIGATION NOR LIABILITY TO THE OTHER (EXCEPT STATED ABOVE) UNTIL A WRITTEN AGREEMENT IS FULLY EXECUTED BY BOTH PARTIES.

STARBUCKS TEMPLATE VERSION: i2021-09-13

Design Forum Architects Inc.
2056 Byers Rd
Miamisburg, OH 45342
Tel: (844) 804-7700
Donald J. Rethman
Architect In Charge
License: AR00017303

Design Forum Engineering
2056 Byers Rd
Miamisburg, OH 45342
Tel: (844) 804-7700
Timothy L. Raberding, PE
Professional Engineer
License: 62078

PROJECT NAME:
US 98 & GRIFFIN RD

PROJECT ADDRESS:
3105 US-98 NORTH
LAKELAND, FLORIDA 33801

STORE #:	80004
PROJECT #:	96892-001
ISSUE DATE:	2025-09-26
DESIGN MANAGER:	ASHLEY ASUEIRAS
PRODUCTION DESIGNER:	ANDY MCLOUD
CHECKED BY:	DONALD RETHMAN

Revision Schedule

Rev	Date	Description
2	10/3/25	Revision 2

SHEET TITLE:
MECHANICAL SCHEDULES
SCALE:

SHEET NUMBER:
M601

10/9/2025 10:59:51 AM Autodesk Docs://US 98 and Griffin - Starbucks/TI_US 98 & Griffin Rd-MEP_R25_permit.rvt

ABBREVIATIONS

AFF	ABOVE FINISHED FLOOR
AHJ	AUTHORITIES HAVING JURISDICTION
APPROX	APPROXIMATE
BLDG	BUILDING
CKT	CIRCUIT
CLG	CEILING
CM	STARBUCKS CONSTRUCTION MANAGER
CONST	CONSTRUCTION
CW	COLD WATER
CXA	COMMISSIONING AGENT
DEG	DEGREES
DL	LIGHTS WITHIN DAYLIGHT ZONE
DM	STARBUCKS DESIGN MANAGER
DN	DOWN
DTL	DETAIL
DWG(S)	DRAWING(S)
EA	EACH
EC	ELECTRICAL CONTRACTOR
ECP	EQUIPMENT CONTROL PAC
EG	EXHAUST GRILLE
ELEC	ELECTRICAL
EM	EMERGENCY
EMS	ENERGY MANAGEMENT SYSTEM
EXIST	EXISTING
EXT	EXTERIOR
F&I	FURNISH & INSTALL
FLR	FLOOR
FT	FOOT/FEET
GC	GENERAL CONTRACTOR
GFCI	GROUND FAULT CIRCUIT INTERRUPTER
GND	GROUND
HR	HOUR
HVAC	HEATING, VENTILATION, AIR CONDITIONING
HW	HOT WATER
LCP	LIGHTING CONTROL PANEL
LL	LANDLORD
LS	LIGHT SENSOR PHOTOCELL
LV	LOW VOLTAGE
MAX	MAXIMUM
MC	MECHANICAL CONTRACTOR
MDP	MAIN DISTRIBUTION PANEL
MECH	MECHANICAL
MEP	MECHANICAL, ELECTRICAL, AND PLUMBING
MFG	MANUFACTURER
MIN	MINIMUM
NL	NIGHTLIGHT
NTS	NOT TO SCALE
OCP	OVERCURRENT PROTECTION
REF	REFERENCE
REQ'(D)	REQUIRE(D)
REV	REVISION
SB	STARBUCKS
SF	SQUARE FEET
SHT	SHEET
SPECS	SPECIFICATION(S)
SST	STAINLESS STEEL
TEL	TELEPHONE
TEMP	TEMPORARY
TYP	TYPICAL
UNO	UNLESS NOTED OTHERWISE
USB	20A DUPLEX RECEPTABLE WITH USBCHARGING PORT (SEE SPECIFICATION ON THIS SHEET)
VD	VENDOR
WH	WATER HEATER
WP	WEATHER PROOF

MUSIC SYSTEM NOTES

MOUNT OWNER FURNISHED SPEAKERS WHERE SHOWN ON INTERIOR REFLECTED CEILING PLANS AND IN COORDINATION WITH ALL PLANS, DETAILS AND MANUFACTURER'S INSTALLATION REQUIREMENTS. INSTALL AND CONNECT OWNER FURNISHED WIRING SYSTEM BETWEEN ALL SPEAKERS AND THE OWNER PROVIDED MUSIC SYSTEM. SET WATTAGE TAP ON EACH SPEAKER'S ROTARY SWITCH PER TAP SETTINGS NOTED ON PLANS.

RECEPTACLE WITH USB CHARGING PORT

PROVIDE UL FEDERAL SPECIFICATION CERTIFIED TAMPER-RESISTANT DUPLEX RECEPTACLE WITH USB CHARGING CAPABILITIES. FEATURES SHALL INCLUDE OVERALL 3.1A USB CHARGING CAPABILITY, AUTO GROUND CLIPS, ZINC-PLATED GROUND TERMINAL SCREW AND TRIPLE-WIPE BRASS CONTACTS.
PASS & SEYMOUR #TR5362USB* OR EQUAL

- FINISH COLOR SHALL BE AS SPECIFIED ON ARCHITECTURAL DRAWING OR AS DIRECTED BY OWNER'S REPRESENTATIVE.

WIRELESS NETWORK NOTES

CABLING FOR INTERNET SERVICE SHALL BE FURNISHED AND INSTALLED BY THE VENDOR FOR FIBER OR BROADBAND CONNECTIONS. T1 AND ETHERNET EXTENSION CABLING IS PROVIDED BY THE STARBUCKS (TELEPHONE/ NETWORK) CABLING VENDOR. COORDINATE WITH STARBUCKS.

LANDLORD REQUIREMENTS

PRIOR TO BID
THE CONTRACTOR SHALL COORDINATE WITH LANDLORD / BUILDING OWNER FOR ANY CONSTRUCTION REQUIREMENTS. IF LANDLORD / BUILDING OWNER DOES HAVE REQUIREMENTS, CONTRACTOR SHALL BECOME COMPLETELY FAMILIAR WITH REQUIREMENTS AND ADHERE TO THEM. WHERE LANDLORD / BUILDING OWNER REQUIREMENTS ARE MORE STRINGENT THAN SHOWN IN THESE PLANS (IN THE OPINION OF THE ENGINEER). LANDLORD / BUILDING OWNER REQUIREMENTS SHALL GOVERN.

ELECTRICAL SYMBOL LEGEND

J	JUNCTON BOX		RECEPTACLE: DUPLEX
$	SWITCH		RECEPTACLE: DUPLEX - ONE SWITCHED
$3	THREE-WAY SWITCH		RECEPTACLE: QUADPLEX
$M	MOTION (OCCUPANCY) SENSOR SWITCH		RECEPTACLE: QUAD - INDIVIDUAL BRANCH CIRCUIT
S	SWITCHBACK		RECEPTACLE: HIGH VOLTAGE
	TELEPHONE		DATA OUTLET
T	THERMOSTAT(EMS)		RECEPTACLE: FLOOR DUPLEX
S	THERMOSTAT SENSOR (EMS)		GROUNDING ELECTRODE CONNECTION
$D	DIMMER SWITCH	NL	NIGHTLIGHTING 24HR/DAY
	SPECIAL RECEPTACLE: SEE NOTE/SCHEDULE FOR DETAILS	DL	PHOTOELECTRIC CELL
	RACEWAY CONCEALED IN CEILING OR WALL. HASH MARKS INDICATE NUMBER OF WIRES. #12 AWG WIRE UNLESS OTHERWISE NOTED. TWO WIRES PLUS GROUND IF NO HASH MARKS SHOWN. LONG HASH MARK DENOTES NEUTRAL. DOT DENOTES GROUND.	S	SPEAKER
			WIFI ACCESS POINT
		C	360 CAMERA
		CO	CARBON MONOXIDE SENSOR
		CO2	CARBON DIOXIDE SENSOR

FIRE ALARM SYSTEM NOTES

IF STARBUCKS IS REQUIRED TO PROVIDE A FIRE ALARM AND/OR FIRE ALARM MONITORING AND/OR PHONE LINES FOR A FIRE ALARM, AS SPECIFIED IN THE LEASE AGREEMENT, THE CONTRACTOR IS TO NOTIFY GNOC IMMEDIATELY THAT FIRE ALARM LINES ARE NEEDED. STARBUCKS PREFERRED FIRE ALARM SERVICE PROVIDER, STANLEY, IS TO BE CONTACTED BY THE CONSTRUCTION MANAGER TO INSTALL FIRE ALARM PANEL AND/OR MONITORING SERVICE AS REQUIRED.

CARBON MONOXIDE (CO) DETECTOR NOTES

COORDINATE INSTALLATION OF CARBON MONOXIDE (CO) DETECTOR DEVICE(S) AND LOW VOLTAGE WIRING WITH STARBUCKS SECURITY VENDOR FOR NEW STORES, RELOCATIONS AND MAJOR RENOVATIONS, IF IN VENDOR SCOPE. VENDOR TO PROVIDE AND INSTALL DEVICE(S) IN BOH AND FOH (AS APPLICABLE PER STARBUCKS STANDARDS).

CONTROLS AND OPERATION

A. THE GENERAL CONTRACTOR SHALL CONTACT **<INSERT VENDOR NAME>** PRIOR TO THE LAST WEEK OF CONSTRUCTION FOR COMMISSIONING AND COORDINATE REQUIREMENTS WITH STARBUCKS.

B. FURNISH AND INSTALL RACEWAYS WITH PULL STRINGS AND JUNCTION BOXES FOR THERMOSTAT(S) AND SENSOR(S).

C. SET RESTROOM OCCUPANCY SENSOR TO 5 MINUTE 'ON' DURATION IN SINGLE OCCUPANT RESTROOM AND TO 5 MINUTE 'ON' DURATION IN MULTI-OCCUPANT RESTROOM UNLESS JURISDICTION REQUIREMENTS STATE OTHERWISE.

D. COORDINATE WITH DRAWINGS AND LCP VENDOR FOR DEVICE LOCATIONS. VENDOR SHALL COMMISSION CONTROLS.

E. THE GENERAL CONTRACTOR IS TO COMPLETE FINAL CONNECTION AFTER DATA RACK AND NETWORK INSTALLATION. THE GENERAL CONTRACTOR IS TO CONTACT LCP VENDOR TO VERIFY SYSTEM OPERATION AND TROUBLESHOOT IF REQUIRED.

ENERGY MANAGEMENT SYSTEM (EMS)

A. THE GENERAL CONTRACTOR SHALL INSTALL **<INSERT LCP PRODUCT>** AND **<INSERT EMS SYSTEM>**. PRIOR TO LAST WEEK OF CONSTRUCTION, IF NEEDED, FURNISH AND INSTALL TEMPORARY THERMOSTATS AND SENSORS, AND ROUTE ALL LOW VOLTAGE WIRING THROUGH EC PROVIDED CONDUITS (COORDINATE WITH ELECTRICAL).

B. FURNISH AND INSTALL RACEWAYS WITH PULL STRINGS AND JUNCTION BOXES FOR THERMOSTAT(S) AND SENSOR(S).

C. SET RESTROOM OCCUPANCY SENSOR TO 5 MINUTE 'ON' DURATION IN SINGLE OCCUPANT RESTROOM AND TO 5 MINUTE 'ON' DURATION IN MULTI-OCCUPANT RESTROOM UNLESS JURISDICTION REQUIREMENTS STATE OTHERWISE.

D. COORDINATE WITH DRAWINGS AND LCP VENDOR FOR DEVICE LOCATIONS. VENDOR SHALL COMMISSION CONTROLS.

E. THE GENERAL CONTRACTOR IS TO COMPLETE FINAL CONNECTION AFTER DATA RACK AND NETWORK INSTALLATION. THE GENERAL CONTRACTOR IS TO CONTACT LCP VENDOR TO VERIFY SYSTEM OPERATION AND TROUBLESHOOT IF REQUIRED.

SYSTEM COMMISSIONING

CONTRACTOR RESPONSIBILITIES FOR BUILDING COMMISSIONING

CONTRACTOR SHALL PROVIDE SUPPORT AND WORK AS SPECIFIED, NEEDED AND REQUIRED TO CONDUCT AND FACILITATE STARBUCKS STAFF BUILDING COMMISSIONING EFFORTS. THIS WORK WILL BE COMPRISED OF THREE DISTINCT EFFORTS:

A. SUPPORT STARBUCKS COMMISSIONING AGENT (CXA) DURING INSTALLATION VERIFICATION AND CORRECT DISCLOSED DEFICIENCIES;

B. PERFORM TESTING, ADJUSTING, BALANCING AND SYSTEM STARTUP AND SUPPORT FUNCTIONAL PERFORMANCE TESTING BY STARBUCKS CXA;

C. CORRECT DEFICIENCIES DISCLOSED BY FUNCTIONAL PERFORMANCE TESTING AND SUBMIT REPORTS. CONTRACTOR SHALL PERFORM AND PROVIDE THE FOLLOWING:

a. SYSTEMS SUBJECT TO COMMISSIONING MAY INCLUDE , BUT ARE NOT LIMITED TO DOMESTIC HOT WATER GENERATION, HVAC SYSTEMS, ROOFTOP UNITS, EXHAUST FANS, HVAC CONTROLS, LIGHTING CONTROLS AND AIR CURTAINS.

b. CONTRACTOR SHALL INCLUDE COMMISSIONING ACTIVITIES IN PROJECT SCHEDULE AND SHOW INTERVALS FOR PERFORMANCE OF WORK FOR WHICH CONTRACTOR IS RESPONSIBLE AND INTERVALS FOR WORK PERFORMED BY STARBUCKS CXA. CONTRACTOR SHALL SHOW RESOURCES FOR PERFORMING ALL WORK RELATED TO COMMISSIONING ACTIVITIES ON A LINE ITEM IN THE SCHEDULE OF VALUES.

c. CONTRACTOR SHALL INSTALL EQUIPMENT IN ACCORDANCE WITH THE MANUFACTURER'S REQUIREMENTS AND ALL CONTRACT DOCUMENTS. ENSURE THAT ALL EQUIPMENT IS INSTALLED TOTALLY COMPLETE, AND ACCESSIBLE TO STARBUCKS CXA FOR INSTALLATION VERIFICATION AND FUNCTIONAL PERFORMANCE TESTING PRIOR TO THE SCHEDULED START OF INSTALLATION VERIFICATION.

d. INSTALLATION VERIFICATION SHALL BE PERFORMED BY STARBUCKS CXA. CONTRACTOR SHALL SUPPORT STARBUCKS CXA INSTALLATION VERIFICATION EFFORTS AS NECESSARY. PROVIDE ALL ACCESS AND EQUIPMENT NECESSARY FOR STARBUCKS STAFF TO VERIFY THAT THE EQUIPMENT IS INSTALLED CORRECTLY.

e. CONTRACTOR SHALL BE READILY AVAILABLE DURING INSTALLATION VERIFICATION TO CORRECT ANY DEFICIENCIES OR DEFECTS DISCLOSED BY THE INSTALLATION VERIFICATION PROCESS. CORRECTIONS SHALL BE MADE IN A TIMELY MANNER WITHOUT DISRUPTION OF THE CONSTRUCTION SCHEDULE.

f. ALL HVAC, EXHAUST FAN, AND AIR CURTAIN EQUIPMENT SHALL BE TESTED, ADJUSTED AND BALANCED BY THE CONTRACTOR'S TESTING, ADJUSTING AND BALANCE AGENT(SEE TESTING, ADJUSTING AND BALANCING) AFTER THE SYSTEM IS VERIFIED TO BE COMPLETE AND CORRECT BY STARBUCKS CXA, IN ACCORDANCE WITH THE REQUIREMENTS OF THESE DOCUMENTS. ALL HVAC CONTROL SYSTEMS SHALL BE TESTE TO ENSURE THAT CONTROL DEVICES, COMPONENTS, EQUIPMENT AND SYSTEMS ARE CALIBRATED, ADJUSTED AND OPERATE IN ACCORDANCE WITH THESE PLANS AND PROJECT MANUAL. SEQUENCES OF OPERATION SHALL BE TESTED TO ENSURE THAT THEY OPERATE IN ACCORDANCE WITH THE CONTRACT REQUIREMENTS. DELIVERABLES: PRELIMINARY, WRITTEN TESTING AND AIR BALANCE REPORT CONFORMING TO THE REQUIREMENTS SPECIFIED HEREIN, DOCUMENTING THE INFORMATION SPECIFIED, ETC. TO THE STARBUCKS CXA IMMEDIATELY UPON COMPLETION OF THE WORK.

g. CONTRACTOR SHALL INFORM STARBUCKS CXA WHEN EQUIPMENT IS READY FOR FUNCTIONAL PERFORMANCE TESTING. ALL EQUIPMENT SHALL BE READY FOR FUNCTIONAL PERFORMANCE TESTING PRIOR TO STARTING TESTING. CONTRACTOR SHALL OPERATE EQUIPMENT FOR STARBUCKS CXA AND VERIFY BY DEMONSTRATION THE CORRECT OPERATION OF EQUIPMENT, RESPONSE OF SENSORS, AND PROPER EXECUTION OF HVAC CONTROL AND LIGHTING SEQUENCES; INCLUDING BUT NOT LIMITED TO, AIR MOVEMENT, TEMPERATURE, SOUND, AND CONTROL RESPONSE. PROVIDE ANY SECURITY ACCESS, HARDWARE, SOFTWARE, OR OTHER SUPPORT AS NEEDED FOR THE STARBUCKS CXA TO EFFICIENTLY WITNESS AND DOCUMENT ALL EQUIPMENT TESTING. STARBUCKS CXA WILL RECORD THE EQUIPMENT OPERATION AND RESPONSE TO TESTING SEQUENCES AND PREPARE A LIST OF ANY DEFICIENCIES DISCLOSED BY THE FUNCTIONAL PERFORMANCE TESTS FOR CORRECTION BY THE CONTRACTOR. EQUIPMENT INCLUDES, BUT IS NOT LIMITED TO, AIR HANDLING UNITS, ROOFTOP AND SPLIT TYPE, CONDENSING UNITS, EXHAUST FANS, LIGHTING CONTROLS, ETC. DELIVERABLES: PROVIDE COMPLETED COPIES OF ALL START UP REPORTS, FILLED OUT ON THE MANUFACTURER'S FORMS, TO THE STARBUCKS CXA.

h. CONTRACTOR IS RESPONSIBLE FOR CORRECTING ANY ISSUES OR DEFICIENCIES DISCLOSED DURING THE FUNCTIONAL PERFORMANCE TESTING PROCESS. CORRECTIONS SHOULD MADE IN A TIMELY MANNER WITHOUT DISRUPTION TO THE SYSTEM AND CONSTRUCTION SCHEDULE.

i. CONTRACTOR SHALL BE READILY AVAILABLE FOR ANY RETESTING OF EQUIPMENT DEEMED NECESSARY BY STARBUCKS CXA DURING INSTALLATION VERIFICATION AND FUNCTIONAL PERFORMANCE TESTING. CONTRACTOR IS RESPONSIBLE FOR CORRECTING ANY ISSUES OR DEFICIENCIES FOUND IN THE SYSTEM DURING ANY AND ALL RE-TESTING. CORRECTION SHOULD BE MADE IN A TIMELY MANNER WITHOUT DISRUPTION TO THE SYSTEM AND CONSTRUCTION SCHEDULE. DELIVERABLES: FINAL BALANCE REPORT, DEFICIENCIES LIST NOTING CORRECTIVE ACTIONS PERFORMED BY CONTRACTOR IN RESPONSE TO INSTALLATION VERIFICATION AND FUNCTIONAL PERFORMANCE TEST RESULTS.

j. CONSTRUCTION AND POST CONSTRUCTION TESTING: ADDITIONAL TESTING MAY BE REQUIRED AND OTHER PROCESSES THAT MAY OCCUR OUT OF SEQUENCE WITH COMMISSIONING SERVICE. CONTRACTOR SHALL CONDUCT, DOCUMENT, SUPPORT AND SCHEDULE THIS TESTING AS DIRECTED BY STARBUCKS CXA.

COMMUNICATION SYSTEM NOTES

CONFIRM PRIOR TO BEGINNING CONSTRUCTION THAT THE LANDLORD HAS FURNISHED AND INSTALLED ONE (1) ADDITIONAL 2" (51MM) (ENTRANCE) CONDUIT INCLUDING PULL STRING (FOR A TOTAL OF TWO (2)) FROM THE STREET FEED TO THE BUILDING AS IDENTIFIED BY THE INTERNET SERVICE PROVIDER.

ELECTRICAL SCOPE OF WORK SUMMARY

THE FOLLOWING SCOPE OF WORK IS BASED ON THE LANDLORD'S WORKLETTER EXHIBIT C. THIS SCOPE OF WORK IS NOT INTENDED TO INDICATE THE FULL SCOPE, BUT ONLY A BROAD SUMMARY. THE GENERAL CONTRACTOR SHALL REFERENCE THE COMPLETE WORKLETTER FOR A MORE DETAILED DESCRIPTION OF WORK BY BOTH PARTIES. ANY QUESTIONS REGARDING SCOPE SHALL BE BROUGHT TO STARBUCKS ATTENTION FOR CLARIFICATION. RESPONSIBILITY INDICATED BELOW MEANS FURNISHED,PERMITTED AND INSTALLED BY THE PARTY INDICATED.

WORK DESCRIPTION	RESPONSIBILITY	
	LANDLORD	STARBUCKS
MAIN BUILDING SERVICE AND POWER METER	X	
ELECTRICAL PANELS AND FEEDERS	X	
TEMPORARY POWER	N/A	N/A
ELECTRICAL PANEL BREAKERS	X	X
ABOVE FLOOR BRANCH CIRCUIT DISTRIBUTION		X
UNDER-FLOOR / SLAB POWER CONDUITS IN BUILDING (WIRING BY STARBUCKS)		X
UNDERGROUND SITE CONDUITS FOR DT, SIGNS, MENU BOARD, DETECTOR LOOP & DCB (WIRING / CABLING BY STARBUCKS)	X	
SITE LIGHTING	X	
EXTERIOR BUILDING & PATIO LIGHTING	X	
DATA & PHONE SERVICE, DMARC & (2) 2" CONDUITS TO STARBUCKS SPACE	X	
DT WINDOW POWER	X	
DT WINDOW EXTERIOR LIGHTS (2 EACH)	X	
FIRE ALARM SYSTEM	X	

SECURITY SYSTEM NOTES

STARBUCKS CONTRACTS DIRECTLY WITH SECURITY VENDOR TO SUPPLY AND INSTALL THE SECURITY SYSTEM. CONTRACTOR TO SCHEDULE INSTALLATION OF SECURITY SYSTEM FOR FOUR (4) TIMES;

A. MEET TO PLAN SECURITY CABLE PULL WITH SECURITY CABLE INSTALLER PRIOR TO DRYWALL INSTALLATION.

B. SECURITY CABLE INSTALLER PULLS SECURITY CABLES, MOUNTS PANEL, KEYPAD AND SENSORS.

C. SECURITY EQUIPMENT INSTALL OF CAMERA, NVR AND MONITOR.

D. SECURITY MONITORING COMPANY TO BRING SYSTEM ONLINE AND TRAIN PARTNERS AFTER POS INSTALL.

SECURITY VENDOR REQUIRES A MINIMUM TWO (2) WEEKS LEAD TIME FOR EACH INSTALLATION. SECURITY VENDOR WILL COORDINATE REGIONAL INSTALLERS. ALL ADDITIONAL EXPENSES INCURRED DUE TO THE CONTRACTOR'S FAILURE TO SCHEDULE ACCORDINGLY WILL BE THE RESPONSIBILITY OF THE CONTRACTOR.

TELEPHONE SYSTEM NOTES

A. IF ADDITIONAL TELEPHONE LINES ARE REQUIRED BEYOND THE STANDARD SINGLE LINE (SUCH AS FOR A FIRE ALARM) THE GENERAL CONTRACTOR SHALL CONTACT THE STARBUCKS CONSTRUCTION MANAGER PRIOR TO BEGINNING CONSTRUCTION TO ORDER THE ADDITIONAL TELEPHONE LINE(S). REPORT ANY TELEPHONE INSTALLATION ISSUES IMMEDIATELY TO THE STARBUCKS CONSTRUCTION MANAGER.

B. CONFIRM PRIOR TO BEGINNING CONSTRUCTION THAT THERE ARE EXISTING, WORKING TELCO FACILITIES TO THE BUILDING OR THAT LANDLORD HAS FURNISHED AND INSTALLED ONE (1) 2" (51MM) MIN. (ENTRANCE) CONDUIT INCLUDING PULL STRING FROM TELCO STREET FEED LINE TO THE BUILDING AS IDENTIFIED BY THE PHONE COMPANY. NOTIFY STARBUCKS CONSTRUCTION MANAGER IMMEDIATELY IF FACILITIES OR CONDUIT AND PULL STRING ARE NOT INSTALLED.

C. GENERAL CONTRACTOR IS TO ENSURE THAT THERE IS A 2" (51MM) MIN. CONDUIT WITH PULL STRING FROM THE DATA RACK TO THE DEMARC (TELCO TO CUSTOMER HAND OFF EQUIPMENT) WHEN THE DEMARC IS MORE THAN 10' FROM THE DATA RACK. DISTANCES LESS THAN 10' WILL NOT REQUIRE CONDUIT.

D. PROVIDE A 3-POSITION GROUND LUG, GROUNDED WITH #6 AWG GROUND WIRE, IF REQUIRED BY TELEPHONE COMPANY.

E. ALL TELEPHONE/NETWORK CABLING IS THE SCOPE OF WORK OF THE TELEPHONE/NETWORK CABLING VENDOR.

POS \ DATA LINE NOTES

A. STARBUCKS CONTRACTS DIRECTLY WITH THE DATA CABLING VENDOR TO SUPPLY AND INSTALL CATEGORY 5e (CAT5e) LAN CABLE AND CONNECTORS FOR THE POINT OF SALE (POS) SYSTEMS. CONTRACTOR TO SCHEDULE INSTALLATION OF DATA CABLING WITH DATA CABLING VENDOR. DATA CABLING VENDOR REQUIRES A LEAD TIME FOR INSTALLATION. DATA CABLING VENDOR WILL COORDINATE REGIONAL INSTALLERS.

B. AT THE START OF CONSTRUCTION, STARBUCKS CONSTRUCTION MANAGER SCHEDULES DELIVERY OF CASH REGISTER/MANAGER'S WORKSTATION EQUIPMENT AND INSTALLATION BY A POS INSTALL TECHNICIAN FOR ONE (1) MONTH PRIOR TO STORE OPEN. CONTRACTOR TO VERIFY DELIVERY SCHEDULE TWO (2) WEEKS PRIOR TO DELIVERY AND INSTALLATION DATE. EQUIPMENT IS SHIPPED DIRECTLY TO THE STORE. CONTRACTOR TO ACCEPT POS EQUIPMENT DELIVERY. DO NOT REFUSE DELIVERY.

C. DATA CABLING TECHNICIAN TO PROVIDE ALL CAT5e LAN CABLING AND CONNECTORS FROM ALL DESIGNED AND FUTURE CASH REGISTER LOCATIONS, MANAGER'S WORKSTATION, ALL OTHER NETWORKED EQUIPMENT (CUP LABELERS, CLOVER, BUMP BAR, ETC...) AND WIRELESS ACCESS POINT TO THE DATA RACK AREA. CONTRACTOR IS TO HAVE CONDUIT WITH PULL STRING IN PLACE FOR ALL CABLE RUNS PRIOR TO CABLE INSTALL DATE.

D. STARBUCKS NEW STORE GROUP IS RESPONSIBLE FOR COORDINATING STARBUCKS POS SYSTEMS DELIVERY AND INSTALLATION WITH THE POS VENDOR. THIS GROUP MAY BE CONTACTED AT: **NEWSTORES@STARBUCKS.COM**.

GENERAL ELECTRICAL NOTES

A. THE ELECTRICAL CONTRACTOR SHALL COORDINATE ELECTRICALWORK WITH OTHER TRADES. THE ARCHITECTURAL DRAWINGS SHALL TAKE PRECEDENCE OVER ALL OTHER RAWINGS. DO NOT SCALE DISTANCES OFF THE ELECTRICAL DRAWINGS; USE ACTUAL BUILDING DIMENSIONS. OVERALL CASEWORK COMPONENT DIMENSIONING ON ELECTRICAL DETAILS ARE HOWN FOR REFERENCE AND COORDINATION ONLY. SEE PROJECT MANUAL.

B. ALL ELECTRICAL SYSTEMS SHALL BE TESTED FOR PROPER OPERATION. BALANCE ALL BRANCH CIRCUIT LOADS BETWEEN THE PHASES OF THE SYSTEM WITHIN 10% OF THE HIGHEST PHASE LOAD IN EACH PANEL BOARD.

C. THE ELECTRICAL CONTRACTOR SHALL BE RESPONSIBLE FOR DE-ENERGIZING CIRCUITS IN DEMOLITION AREAS TO INSURE A SAFE CONDITION. ELECTRICAL DEVICES AND ASSOCIATED WIRING LOCATED WITHIN THE DEMOLITION AREA THAT WILL NO LONGER BE USED SHALL BE REMOVED AND PROPERLY DISPOSED OF AT CONTRACTORS EXPENSE UNLESS OTHERWISE NOTED.

D. THE ELECTRICAL CONTRACTOR SHALL SCHEDULE ALL ELECTRICAL SYSTEM OUTAGES WITH THE GENERAL CONTRACTOR AND LANDLORD AT LEAST 24 HOURS IN ADVANCE. UNLESS APPROVED OTHERWISE ALL OUTAGES SHALL OCCUR BETWEEN 11:00PM AND 5:00AM.

E. ELECTRICAL CONTRACTOR SHALL FURNISH AND INSTALL ALL NECESSARY CONDUIT AND J-BOXES TO SUPPORT A COMPLETE SECURITY, PHONE, POS AND DATA SYSTEMS. SEE MANAGER WORKSTATION AND BAR POINT OF SALE (POS) POWER/TELECOM/SECURITY DIAGRAM. COORDINATE ALL DEVICE LOCATIONS AND MOUNTING HEIGHTS WITH SECURITY VENDOR PRIOR TO ROUGH-IN. PROVIDE END-TO-END PULL STRINGS IN ALL CONDUITS. LABEL EACH END OF THE PULL STRING WITH CONDUIT SYSTEM ("SECURITY") AND DESTINATION ("CAFE", "FRONT BAR",ETC.). PROVIDE INSULATED BUSHINGS ON ALL STUBBED-UP AND EXPOSED CONDUIT ENDS.

F. ELECTRICAL CONTRACTOR SHALL COORDINATE WITH THE GENERAL CONTRACTOR TO PATCH AND REPAIR ALL EXISTING WALLS, FLOORS, CEILINGS OR OTHER SURFACES IDENTIFIED TO REMAIN THAT MAY BECOME DAMAGED DURING THE COURSE OF WORK.

G. EXPOSED/SURFACE MOUNTED CONDUITS SHALL ONLY BE ALLOWED WHERE NECESSARY IN EXPOSED CEILING AREAS. IF CONDUITS NEED TO BE SURFACE MOUNTED TO WALLS, COORDINATE WITH STARBUCKS CONSTRUCTION MANAGER FOR APPROVAL.

H. VERIFY LOCATION OF ALL OUTLETS AND SWITCHES WITH ARCHITECTURAL DRAWINGS, INTERIOR DETAILS, FINISH SCHEDULES, GENERAL CONTRACTOR, EQUIPMENT VENDORS, STARBUCKS AND EXISTING SITE CONDITIONS. VERIFY FINAL DOOR HINGE LOCATION PRIOR TO SWITCH INSTALLATION AND ADJUST SWITCH LOCATION IF NEEDED. DO NOT MOUNT RECEPTACLES/SWITCHES IN LOCATIONS THAT WOULD CONFLICT WITH MIRRORS, SEAMS OF WALLS, WAINSCOTS, TILE TRANSITIONS, ETC.

GENERAL NOTES

SCOPE
THE INTENT OF THE DRAWINGS AND PROJECT MANUAL IS TO PROVIDE A COMPLETE AND FULLY OPERATIONAL ELECTRICAL SYSTEM. THE ELECTRICAL CONTRACTOR SHALL FURNISH AND INSTALL ALL LABOR, MATERIAL, AND EQUIPMENT NECESSARY TO COMPLETE THE ELECTRICAL WORK.

SITE EXAMINATION
THE ELECTRICAL CONTRACTOR SHALL THOROUGHLY EXAMINE ALL AREAS WHERE EQUIPMENT, CONDUIT, AND WIRING WILL BE INSTALLED AND WILL REPORT ANY CONDITION THAT, IN HIS OPINION, PREVENTS THE PROPER INSTALLATION OF THE ELECTRICAL WORK.

STANDARDS
EQUIPMENT AND MATERIALS SHALL CONFORM WITH APPROPRIATE PROVISIONS OF CSA, ULC, NEC, ASTM, UL, ETL, NEMA, ANSI, AS APPLICABLE TO EACH INDIVIDUAL UNIT OR ASSEMBLY.

CODES
ALL WORK SHALL BE PERFORMED IN STRICT ACCORDANCE WITH ALL APPLICABLE PROVINCIAL AND LOCAL CODES AND ORDINANCES. IN CASE OF CONFLICT BETWEEN THE DRAWINGS AND SPECIFICATIONS AND THE CODES, THE HIGHEST STANDARD SHALL APPLY. ELECTRICAL CONTRACTOR SHALL SATISFY CODE REQUIREMENTS AS A MINIMUM STANDARD WITHOUT ANY EXTRA COST TO STARBUCKS.

PERMITS AND FEES
THE ELECTRICAL CONTRACTOR SHALL PROCURE AND PAY FOR ALL PERMITS, FEES, AND INSPECTIONS NECESSARY TO COMPLETE THE ELECTRICAL WORK.

WARRANTY
THE ELECTRICAL CONTRACTOR SHALL UNCONDITIONALLY WARRANT ALL WORK TO BE FREE OF DEFECTS IN MATERIAL AND WORKMANSHIP FOR A PERIOD OF ONE (1) YEAR FROM THE DATE OF FINAL ACCEPTANCE BY STARBUCKS AND WILL REPAIR OR REPLACE ANY DEFECTIVE WORK PROMPTLY AND WITHOUT CHARGE AND RESTORE ANY OTHER EXISTING WORK DAMAGED IN THE COURSE OF REPAIRING DEFECTIVE MATERIALS AND WORKMANSHIP.

FOR CONSTRUCTION

© 2019 STARBUCKS COFFEE COMPANY

STARBUCKS®
2401 UTAH AVENUE SOUTH
SEATTLE, WASHINGTON 98134
(206) 318-1575

THESE DRAWINGS AND THE PROJECT MANUAL ARE CONFIDENTIAL AND SHALL REMAIN THE SOLE PROPERTY OF STARBUCKS CORPORATION, WHICH IS THE OWNER OF THE COPYRIGHT IN THIS WORK. THEY SHALL NOT BE REPRODUCED (IN WHOLE OR IN PART), SHARED WITH THIRD PARTIES OR USED IN ANY MANNER ON OTHER PROJECTS OR EXTENSIONS TO THIS PROJECT WITHOUT THE PRIOR WRITTEN CONSENT OF STARBUCKS CORPORATION. THESE DRAWINGS AND SPECIFICATIONS ARE INTENDED TO EXPRESS DESIGN INTENT FOR A PROTOTYPICAL STARBUCKS STORE (WHICH IS SUBJECT TO CHANGE AT ANYTIME) AND DO NOT REFLECT ACTUAL SITE CONDITIONS. NEITHER PARTY SHALL HAVE ANY OBLIGATION NOR LIABILITY TO THE OTHER (EXCEPT STATED ABOVE) UNTIL A WRITTEN AGREEMENT IS FULLY EXECUTED BY BOTH PARTIES.

STARBUCKS TEMPLATE VERSION: i2021-09-13

Design Forum Architects Inc.
2056 Byers Rd
Miamisburg, OH 45342
Tel: (844) 804-7700
Donald J. Rethman
Architect In Charge
License: AR00017303

Design Forum Engineering
2056 Byers Rd
Miamisburg, OH 45342
Tel: (844) 804-7700
Timothy L. Raberding, PE
Professional Engineer
License: 62078

PROJECT NAME:
US 98 & GRIFFIN RD

PROJECT ADDRESS:
3105 US-98 NORTH
LAKELAND, FLORIDA 33801

STORE #:	80004
PROJECT #:	96892-001
ISSUE DATE:	2025-09-26
DESIGN MANAGER:	ASHLEY ASUEIRAS
PRODUCTION DESIGNER:	ANDY MCLOUD
CHECKED BY:	DONALD RETHMAN

Revision Schedule

Rev	Date	Description

SHEET TITLE:
ELECTRICAL NOTES

SCALE:

SHEET NUMBER:
E001

10/9/2025 1:14:47 PM Autodesk Docs://US 98 and Griffin - Starbucks/TI_US 98 & Griffin Rd-MEP_R25_permit.rvt

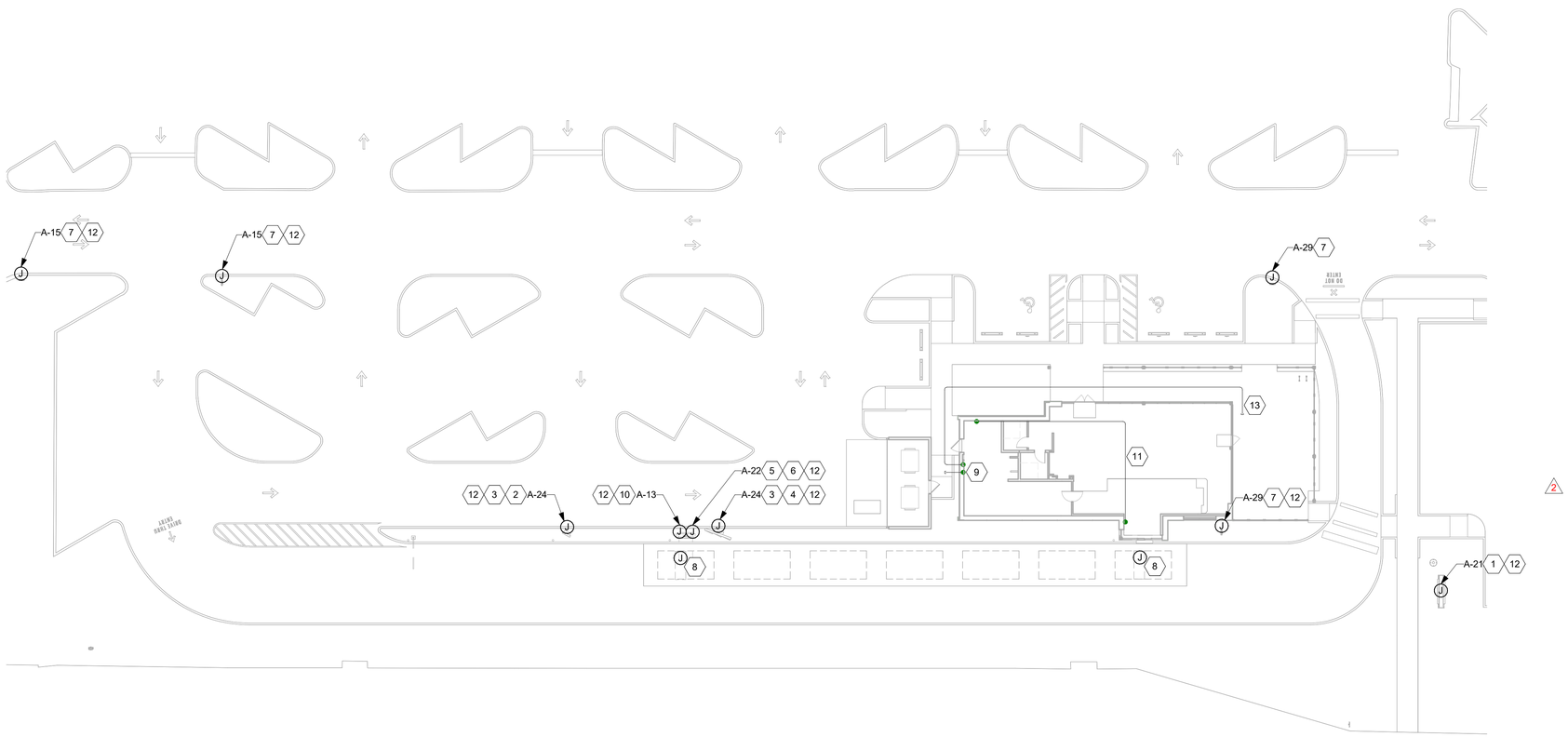

1 SITE PLAN
1" = 20'-0"

N

GENERAL NOTES

A. VERIFY FULL SCOPE OF WORK WITH LANDLORD WORK LETTER PRIOR TO BID. NO EXTRAS OR CHANGE ORDERS SHALL BE GIVEN FOR THE GC'S FAILURE TO FULLY UNDERSTAND THE SCOPE.

B. COORDINATE ALL CONDUIT ROUTING WITH ARCHITECTURAL AND CIVIL PLANS, AND OTHER TRADES.

C. SIGN LOCATIONS ON THIS PLAN ARE FOR REFERENCE ONLY, ACTUAL LOCATIONS SHALL BE DETERMINED FROM THE ARCHITECTURAL AND CIVIL PLANS, AND THE CONSTRUCTION MANAGER.

D. REFER TO POWER PLAN FOR PANELBOARD LOCATIONS.

E. FOR ALL SIGN / MENU LOCATIONS, VERIFY ALL ELECTRICAL REQUIREMENTS WITH MANUFACTURER PRIOR TO ROUGH-IN. PROVIDE CONDUCTORS AND OVERCURRENT PROTECTION FOR A COMPLETE INSTALLATION.

KEYED NOTES

1 PROVIDE POWER CONNECTION TO STARBUCKS MONUMENT SIGNAGE.PROVIDE A WEATHERPROOF JUNCTION BOX WITH DISCONNECT SWITCH.

2 PROVIDE POWER CONNECTION TO PRE-MENU SIGN. PROVIDE WEATHERPROOF JUNCTION BOX WITH DISCONNECT SWITCH.

3 EXISTING 1" PVC CONDUIT FOR FUTURE USE TO MENU SIGN AND TO PRE-MENU SIGN TO REMAIN.

4 PROVIDE POWER CONNECTION TO MENU SIGN. PROVIDE WEATHERPROOF JUNCTION BOX WITH DISCONNECT SWITCH.

5 EXISTING (2) 1" PVC CONDUITS FROM OCS/SPEAKER POST (AKA DOS/DCB) TO DRIVE-THRU WINDOW TO REMAIN - SEE LOW-VOLTAGE CABLE NOTES.

6 PROVIDE POWER CONNECTION TO OCS/SPEAKER POST (AKA DOS/DCB). PROVIDE WEATHERPROOF JUNCTION BOX WITH DISCONNECT SWITCH.

7 PROVIDE POWER CONNECTION TO STARBUCKS DIRECTIONAL SIGNAGE. NOTE THAT UP TO THREE DIRECTIONAL SIGNS CAN BE SERVED BY A SINGLE CIRCUIT. ADDITIONAL SIGNS REQUIRE A NEW DEDICATED CIRCUIT AND CONDUIT. PROVIDE A WEATHERPROOF JUNCTION BOX WITH DISCONNECT SWITCH.

8 EXISTING 3/4" PVC CONDUIT FOR EACH OF TWO TENANT-FURNISHED DETECTOR LOOP TO REMAIN.

9 EXISTING 1" PVC CONDUIT THRU FOUNDATION WALL OUT REAR OF BUILDING, CAPPED AND TERMINATED ABOVE CEILING TO REMAIN.

10 PROVIDE POWER CONNECTION TO CANOPY UPLIGHT FROM ELECTRICAL PANEL.

11 PROVIDE 1-1/2" CONDUIT WITH PULL STRING FROM DATA RACK AT MANAGER WORKSTATION TO DRIVE-THRU BUMP.

12 CIRCUIT SERVING THIS DEVICE SHALL BE AUTOMATICALLY CONTROLLED. FURNISH AND INSTALL ALL CONDUIT, WIRE, CONNECTIONS, AND CONTACTORS NECESSARY TO ENSURE A FUNCTIONAL SYSTEM (SEE LIGHTING CONTROL DIAGRAM ON E-601).

13 EXISTING 1" PVC CONDUIT TO PATIO AREA FROM ELECTRICAL PANEL TO REMAIN.

FOR CONSTRUCTION

© 2019 STARBUCKS COFFEE COMPANY

STARBUCKS®
2401 UTAH AVENUE SOUTH
SEATTLE, WASHINGTON 98134
(206) 318-1575

THESE DRAWINGS AND THE PROJECT MANUAL ARE CONFIDENTIAL AND SHALL REMAIN THE SOLE PROPERTY OF STARBUCKS CORPORATION, WHICH IS THE OWNER OF THE COPYRIGHT IN THIS WORK. THEY SHALL NOT BE REPRODUCED (IN WHOLE OR IN PART), SHARED WITH THIRD PARTIES OR USED IN ANY MANNER ON OTHER PROJECTS OR EXTENSIONS TO THIS PROJECT WITHOUT THE PRIOR WRITTEN CONSENT OF STARBUCKS CORPORATION. THESE DRAWINGS AND SPECIFICATIONS ARE INTENDED TO EXPRESS DESIGN INTENT FOR A PROTOTYPICAL STARBUCKS STORE (WHICH IS SUBJECT TO CHANGE AT ANYTIME) AND DO NOT REFLECT ACTUAL SITE CONDITIONS. NEITHER PARTY SHALL HAVE ANY OBLIGATION NOR LIABILITY TO THE OTHER (EXCEPT STATED ABOVE) UNTIL A WRITTEN AGREEMENT IS FULLY EXECUTED BY BOTH PARTIES.

STARBUCKS TEMPLATE VERSION: i2021-09-13

Design Forum Architects Inc.
2056 Byers Rd
Miamisburg, OH 45342
Tel: (844) 804-7700
Donald J. Rethman
Architect In Charge
License: AR00017303

Design Forum Engineering
2056 Byers Rd
Miamisburg, OH 45342
Tel: (844) 804-7700
Timothy L. Raberding, PE
Professional Engineer
License: 62078

PROJECT NAME:
US 98 & GRIFFIN RD

PROJECT ADDRESS:
3105 US-98 NORTH
LAKELAND, FLORIDA 33801

STORE #:	80004
PROJECT #:	96892-001
ISSUE DATE:	2025-09-26
DESIGN MANAGER:	ASHLEY ASUEIRAS
PRODUCTION DESIGNER:	ANDY MCLOUD
CHECKED BY:	DONALD RETHMAN

Revision Schedule

Rev	Date	Description
2	10/3/25	Revision 2

SHEET TITLE:
ELECTRICAL SITE PLAN

SCALE:

SHEET NUMBER:
E004

10/9/2025 1:14:48 PM Autodesk Docs://US 98 and Griffin - Starbucks/TI_US 98 & Griffin Rd-MEP_R25_permit.rvt

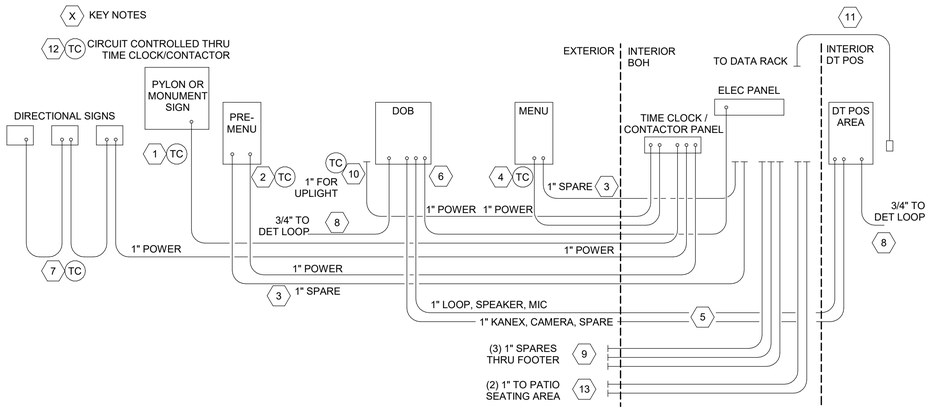

1 DTE CONDUIT SCHEMATIC
N.T.S.

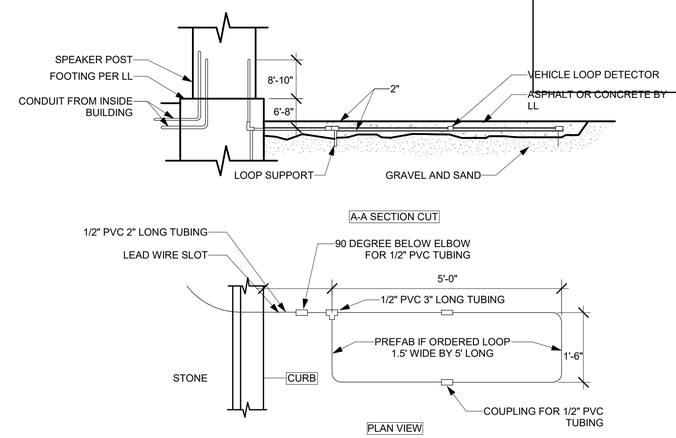

2 DT SENSOR LOOP DETAIL
N.T.S.

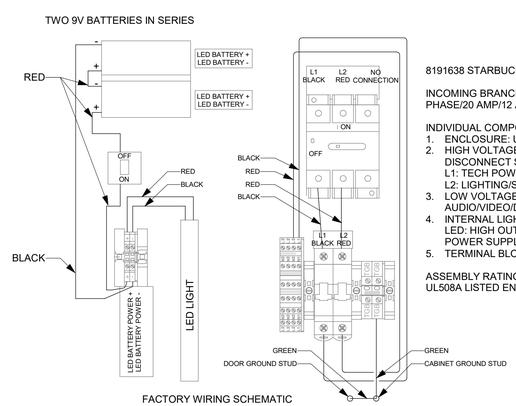

FACTORY WIRING SCHEMATIC

8191638 STARBUCKS ENCLOSURE CHARACTERISTICS

INCOMING BRANCH CIRCUIT PROTECTION REQUIREMENTS 120V AC SINGLE PHASE/20 AMP/12 AWG

INDIVIDUAL COMPONENT GENERAL INFORMATION
1. ENCLOSURE: UL 508A LISTED TYPE 4
2. HIGH VOLTAGE SIDE
   DISCONNECT SWITCH: UL 98/ON FUSEABLE/600V/30 AMPS
   L1: TECH POWER/SUPPLEMENTAL PROTECTION 120V/20 AMP/ UL1077
   L2: LIGHTING/SUPPLEMENTAL PROTECTION 120V/20AMP/UL1077
3. LOW VOLTAGE SIDE
   AUDIO/VIDEO/DATA
4. INTERNAL LIGHT
   LED: HIGH OUTPUT LED/WHITE/IP68
   POWER SUPPLY: 2 9V BATTERIES IN SERIES
5. TERMINAL BLOCKS: UL1059

ASSEMBLY RATING
UL508A LISTED ENCLOSED INDUSTRIAL CONTROL PANEL

3 DRIVE-THRU DCB SCHEMATIC
N.T.S.

FOR CONSTRUCTION

© 2019 STARBUCKS COFFEE COMPANY

STARBUCKS®
2401 UTAH AVENUE SOUTH
SEATTLE, WASHINGTON 98134
(206) 318-1575

THESE DRAWINGS AND THE PROJECT MANUAL ARE CONFIDENTIAL AND SHALL REMAIN THE SOLE PROPERTY OF STARBUCKS CORPORATION, WHICH IS THE OWNER OF THE COPYRIGHT IN THIS WORK. THEY SHALL NOT BE REPRODUCED (IN WHOLE OR IN PART), SHARED WITH THIRD PARTIES OR USED IN ANY MANNER ON OTHER PROJECTS OR EXTENSIONS TO THIS PROJECT WITHOUT THE PRIOR WRITTEN CONSENT OF STARBUCKS CORPORATION. THESE DRAWINGS AND SPECIFICATIONS ARE INTENDED TO EXPRESS DESIGN INTENT FOR A PROTOTYPICAL STARBUCKS STORE (WHICH IS SUBJECT TO CHANGE AT ANYTIME) AND DO NOT REFLECT ACTUAL SITE CONDITIONS. NEITHER PARTY SHALL HAVE ANY OBLIGATION NOR LIABILITY TO THE OTHER (EXCEPT STATED ABOVE) UNTIL A WRITTEN AGREEMENT IS FULLY EXECUTED BY BOTH PARTIES.

STARBUCKS TEMPLATE VERSION: i2021-09-13

Design Forum Architects Inc.
2056 Byers Rd
Miamisburg, OH 45342
Tel: (844) 804-7700
Donald J. Rethman
Architect In Charge
License: AR00173033

Design Forum Engineering
2056 Byers Rd
Miamisburg, OH 45342
Tel: (844) 804-7700
Timothy L. Raberding, PE
Professional Engineer
License: 62078

PROJECT NAME:
US 98 & GRIFFIN RD

PROJECT ADDRESS:
3105 US-98 NORTH
LAKELAND, FLORIDA 33801

STORE #:	80004
PROJECT #:	96892-001
ISSUE DATE:	2025-09-26
DESIGN MANAGER:	ASHLEY ASUEIRAS
PRODUCTION DESIGNER:	ANDY MCLOUD
CHECKED BY:	DONALD RETHMAN

Revision Schedule

Rev	Date	Description
2	10/3/25	Revision 2

SHEET TITLE:
ELECTRICAL DETAILS

SCALE:

SHEET NUMBER:
E005 2

10/9/2025 1:14:48 PM Autodesk Docs://US 98 and Griffin - Starbucks/TI_US 98 & Griffin Rd-MEP_R25_permit.rvt

DEVICE SCHEDULE

DEVICE ID	DESCRIPTION	NEMA	VOLTS	NOTES	QUANTITY
10014	MOBILE POS PRINTER	5-15	120V 1P 2W	PROVIDE RECEPTACLE BELOW COUNTER	3
10075	CUP LABELER	5-15	120V 1P 2W	PROVIDE RECEPTACLE BELOW COUNTER	4
10179	HAND DRYER SURFACE MOUNTED		120V 1P 2W	COORDINATE EXACT VOLTAGE/WIRING REQUIREMENTS WITH VENDOR AND MANUFACTURER'S INSTALLATION INSTRUCTIONS	2
10267	1-DOOR UNDERCOUNTER REFRIGERATOR	5-15	120V 1P 2W	PROVIDE RECEPTACLE @26" AFF	5
10267q	1-DOOR UNDERCOUNTER REFRIGERATOR	5-15	120V 1P 2W	PROVIDE RECEPTACLE @26" AFF	1
10808	GRINDER	5-15	120V 1P 2W	PROVIDE RECEPTACLE BELOW COUNTER	1
10970	1 DOOR R-I REFRIGERATOR	5-15	120V 1P 2W	PROVIDE RECEPTACLES ON DEDICATED CIRCUIT @84" AFF	1
11083	2 DOOR R-I REFRIGERATOR	5-15	120V 1P 2W	PROVIDE RECEPTACLES ON DEDICATED CIRCUIT @84" AFF	2
12508	BLENDER	5-15	120V 1P 2W	PROVIDE A DUPLEX FOR EACH BLENDER ON DEDICATED CIRCUIT. MOUNT DUPLEX UNDER COUNTER	2
12618	1-DOOR UNDERCOUNTER REFRIGERATOR	5-15	120V 1P 2W	PROVIDE RECEPTACLE @26" AFF	2
13620	1 DOOR R-I FREEZER	5-15	120V 1P 2W	PROVIDE RECEPTACLES ON DEDICATED CIRCUIT @84" AFF	1
13682	2 DOOR R-I FREEZER	5-20	120V 1P 2W	PROVIDE RECEPTACLE ON DEDICATED CIRCUIT @84" AFF	2
16238	FOOD CASE		120/208V 2P 3W	PROVIDE HARDWIRED CONNECTIONS FOR REFRIGERATION AND LIGHTING. ROUTE 3/4" CONDUIT WITH 2#12 AND 1#12 GROUND TO PANEL	1
19742	ESPRESSO MACHINE MASTRENA	6-50	120/208V 2P 3W	VERIFY FINAL CONNECTION REQUIREMENTS WITH EQUIPMENT MFGR	2
20011	NITRO STATION	5-15P	120V 1P 2W	PROVIDE RECEPTACLE @26" AFF	1
20032	TURBOCHEF OVEN	6-30R	120/208V 2P 3W	SEE DRAWING NOTE	2
21679	NITROGEN GENERATOR COMPACT	5-15	120V 1P 2W	PROVIDE 120V RECEPTACLE	1
22642	FAUCET - HOT WATER DISPENSER GOOSENECK	5-20	120V 1P 2W	PROVIDE RECEPTACLE @26" AFF ON DEDICATED GFCI PROJECTED CIRCUIT	3
22885	BREWER CLOVER VERTICA DOUBLE	14-50R	120/208V 2P 3W	SEE DRAWING NOTE	1
23181	ICE - MACHINE HMD2110RBT REMOTE COOLED	5-15	120V 1P 2W	PROVIDE RECEPTACLE @72" AFF INSTALL RECEPTACLE WITH GROUND UP	1
24007	DISHWASHER SANITIZER	14-50R	120/208V 2P 3W		1

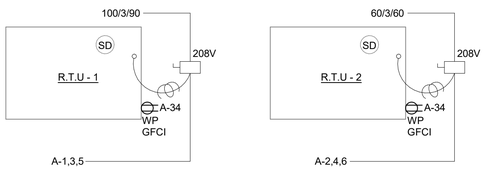

NOTE: SEE 1/M102 FOR LOCATIONS ON THE ROOF
APPROX LOCATIONS SHOWN BELOW
SMOKE DETECTOR, OUTLET,
DISCONNECT ARE FURNISHED WITH THE RTU

RTU CONNECTION DIAGRAM

GENERAL NOTES

A. REFER TO ELECTRICAL DETAIL SHEETS FOR EXACT LOCATIONS AND MOUNTING HEIGHTS OF ELECTRICAL DEVICES.

B. THE ELECTRICAL CONTRACTOR IS RESPONSIBLE FOR CONFIRMING ALL VOLTAGE REQUIREMENTS ON ALL EQUIPMENT AND PROVIDING BUCK-BOOST TRANSFORMERS AS MAY BE NEEDED FOR CODE. ALL ARE NOT NECESSARILY INDICATED.

C. ELECTRICAL CONTRACTOR SHALL COORDINATE WITH PLUMBING AND HEATING, VENTILATING, AND AIR CONDITIONING (HVAC) CONTRACTORS FOR ANY ADDITIONAL EQUIPMENT NEEDING POWER.

D. ANY EQUIPMENT NOTED AS 'FUTURE' SHALL BE PROVIDED WITH APPROPRIATE RECEPTACLES AND WIRING TO ENABLE FUTURE OPERATION.

E. GROUND FAULT CIRCUIT INTERRUPTER (GFCI) BREAKERS (NOT RECEPTACLES) SHALL BE UTILIZED WHERE REQUIRED BY CODE AND AT ANY FLOOR BOXES. PROVIDE DEDICATED NEUTRAL WIRE FOR ALL THESE CIRCUITS.

F. EQUIPMENT REQUIRES CONNECTION TO THE BUILDING ELECTRICAL SYSTEM. FURNISH AND INSTALL ALL NECESSARY CONDUIT, WIRE, CONNECTIONS, RECEPTACLES AND OVERCURRENT PROTECTION NECESSARY TO ENSURE THE EQUIPMENT FUNCTIONS PROPERLY AND COMPLIES WITH ALL APPLICABLE LOCAL AND NATIONAL CODES. COORDINATE EQUIPMENT REQUIREMENTS WITH MANUFACTURER CUT SHEET PRIOR TO ROUGH-IN.

G. ALL FRONT BAR J-BOXES AND OUTLETS SHALL BE SURFACE MOUNTED. PROVIDE CONDUITS AS NEEDED AND ONE (1) ADDITIONAL SPARE CONDUIT BETWEEN ALL J-BOXES FOR FUTURE ELECTRICAL REQUIREMENTS. ALL J-BOXES SHALL BE POSITIONED TO AVOID OBSTRUCTION OF ANY EQUIPMENT SUCH AS REFRIGERATORS AND DISHWASHERS.

H. REFERENCE LANDLORD WORK LETTER FOR DIVISION OF ELECTRICAL SCOPE OF WORK AND COORDINATE WITH STARBUCKS CONSTRUCTION MANAGER.

GROUND FAULT PROTECTION NOTES

A. PROVIDE GFCI PROTECTION AS REQUIRED BY NEC 210.8.

B. CIRCUITS REQUIRING GFCI PROTECTION IDENTIFIED WITH * ON PANEL SCHEDULES (SEE E-601).

C. ABOVE-COUNTER RECEPTACLES THAT ARE READILY ACCESSIBLE AND WITHIN REACH OF PARTNERS SHALL BE GFCI TYPE.

D. BELOW-COUNTER RECEPTACLES, OR RECEPTACLES THAT ARE DIFFICULT TO REACH OR REQUIRE MOVING EQUIPMENT TO RESET, AND ARE NOT READILY ACCESSIBLE SHALL BE PROTECTED BY GFI CIRCUIT BREAKERS.

E. WHERE THE AVAILABLE SHORT CIRCUIT CURRENT EXCEEDS 22,000 AMPS AT THE PANELBOARD, CONTACT CIRCUIT BREAKER MANUFACTURER AND PROVIDE GFCI TYPE CIRCUIT BREAKER THAT SERIES RATES WITH PANEL OVER CURRENT PROTECTION IF AVAILABLE.

F. WHERE THE AVAILABLE SHORT CIRCUIT CURRENT EXCEEDS 22,000 AMPS AT THE PANELBOARD, AND GFCI BREAKERS ARE NOT AVAILABLE, PROVIDE DEAD-FRONT GFCIS (IN A READILY ACCESSIBLE LOCATION) TO SERVE RECEPTACLES THAT ARE NOT READILY ACCESSIBLE.

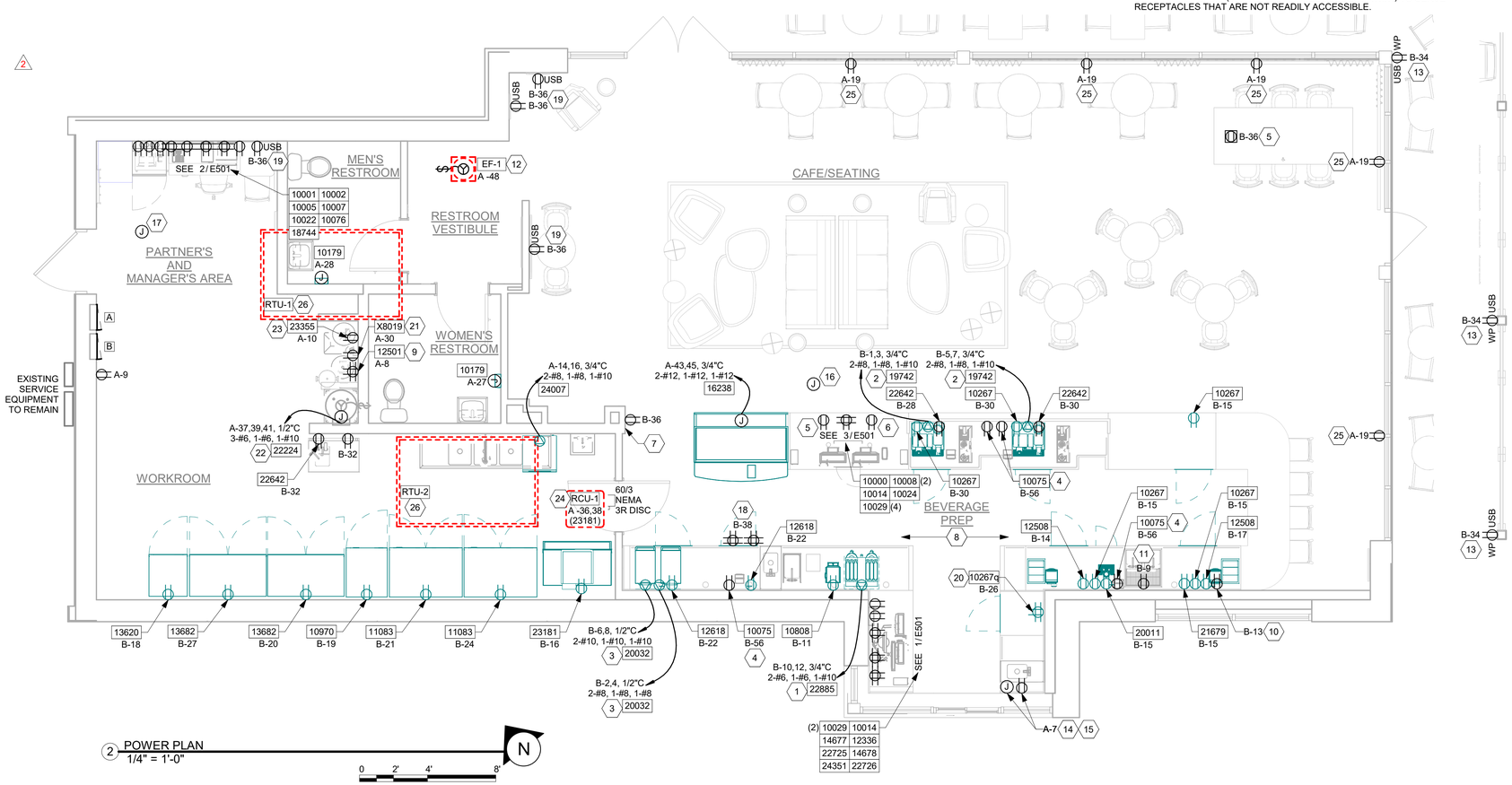

2 POWER PLAN
1/4" = 1'-0"

KEYED NOTES

1. DUAL BREWER: PROVIDE NEMA 14-50R RECEPTACLE, HUBBELL HBL9450A SERIES OR EQUAL MOUNTED AT 48" AFF AND INSTALL NECESSARY CONDUIT, WIRE AND CONNECTIONS BACK TO SERVING PANEL. PROVIDE NEMA 14-50P ANGLED PLUG AND CORD, HUBBELL HBL9452C SERIES OR EQUAL.
2. ESPRESSO MACHINE: PROVIDE NEMA 6-50R RECEPTACLE, HUBBELL9367 SERIES OR EQUAL MOUNTED AT 30" AFF AND INSTALL NECESSARY CONDUIT, WIRE AND CONNECTIONS BACK TO SERVING PANEL. PROVIDE NEMA 6-50P ANGLED PLUG, HUBBELL HBL9368 SERIES OR EQUAL.
3. WARMING OVEN: PROVIDE NEMA 6-30R RECEPTACLE MOUNTED AT 26" AFF AND INSTALL NECESSARY CONDUIT, WIRE AND CONNECTIONS BACK TO SERVING PANEL.
4. CUP LABELER OR MOBILE ORDER PRINTER: PROVIDE BACKBOX FOR DATA OUTLET MOUNTED AT 26" AFF. ROUTE 3/4" CONDUIT FROM BACKBOX TO DATA RACK NEAR MANAGER'S WORK STATION. LABEL CONDUIT FOR DATA CABLING AND PROVIDE PULL STRING FROM END TO END.
5. FLOOR POWER/DATA: SEE PENETRATION PLAN FOR EXACT DIMENSIONING OR LOCATION.
6. POS: FURNISH AND INSTALL DOUBLE-DUPLEX MOUNTED AT 18" AFF PROVIDE DEDICATED GROUND WIRE BACK TO SERVING PANEL. INSTALL (1) J-BOX FOR DATA OUTLET AND (1) J-BOX FOR PHONE OUTLET MOUNTED AT 18" AFF. SEE DETAILS ON E-501.
7. ALARM KEYPAD AND EMERGENCY CALL PHONE: MOUNT AT 54" AFF. ROUTE CONDUIT IN WALL FROM J-BOX AND STUB ABOVE CEILING.
8. ALL BACK BAR AND FRONT BAR J-BOXES AND OUTLETS SHALL BE SURFACE MOUNTED. PROVIDE CONDUITS AS NEEDED AND (1) ADDITIONAL SPARE CONDUIT BETWEEN ALL J-BOXES FOR FUTURE ELECTRICAL REQUIREMENTS. ALL J-BOXES SHALL BE POSITIONED TO AVOID OBSTRUCTION OF ANY EQUIPMENT SUCH AS REFRIGERATORS AND DISHWASHERS.
9. WATER FILTER SYSTEM: PROVIDE RECEPTACLE ON DEDICATED, GFCI PROTECTED, CIRCUIT; FIELD VERIFY EXACT MOUNTING LOCATION WITH INSTALLING CONTRACTOR.
10. RECEPTACLE FOR FUTURE USE. COORDINATE EXACT LOCATION AND MOUNTING HEIGHT WITH OWNER'S REPRESENTATIVE.
11. PROVIDE RECEPTACLE FOR RINSE SINK MOUNTED AT 26" AFF. COORDINATE EXACT LOCATION WITH OWNER'S REPRESENTATIVE.
12. EXHAUST FAN: SHALL BE CONNECTED TO EMS/LIGHTING CONTROL PANEL; FAN TO RUN CONTINUOUSLY DURING OCCUPIED MODE (SEE DETAIL 5 ON E-502). CONFIRM EXACT LOCATION WITH THE MECHANICAL CONTRACTOR.
13. COORDINATE EXACT LOCATION AND MOUNTING HEIGHT(S) OF ALL BY SHELL CONVENIENCE RECEPTACLES WITH OWNER'S REPRESENTATIVE.
14. RECEPTACLE MOUNTED AT 80" AFF FOR ELECTRIC RELEASE DRIVE THRU WINDOW. COORDINATE EXACT LOCATION WITH OWNER'S REPRESENTATIVE.
15. DRIVE THRU AUTOMATIC SLIDER WINDOW: PROVIDE (1) CONDUIT AND J-BOX WITH 120V, 20A BRANCH CIRCUIT. SEE MANUFACTURER'S SPECIFICATIONS FOR FURTHER REQUIREMENTS.
16. PROVIDE 4-SQUARE J-BOX FOR FRONT OF HOUSE STROBE LOCATION; SEE DETAIL ON E-501.
17. PROVIDE 4-SQUARE J-BOX FOR BACK OF HOUSE STROBE LOCATION; FIELD VERIFY EXACT LOCATION.
18. PROVIDE RECEPTACLE AND DATA OUTLET CENTERED HORIZONTALLY BEHIND MENU BOARD FOR FUTURE DIGITAL MENU BOARD. PROVIDE BACKBOX FOR DATA OUTLET. ROUTE 3/4" CONDUIT FROM BACKBOX TO DATA RACK NEAR MANAGER'S WORK STATION. LABEL CONDUIT FOR DATA CABLING AND PROVIDE PULL STRING FROM END TO END. SEE INTERIOR ELEVATIONS FOR MENU BOARD LOCATIONS.
19. PROVIDE DUPLEX OUTLET AT 18 IN AFF. COORDINATE EXACT LOCATION WITH OWNER'S REPRESENTATIVE.
20. PROVIDE DOUBLE DUPLEX RECEPTACLE FOR UNDER COUNTER REFRIGERATOR AND FUTURE USE; SEE DETAIL ON E-501.
21. HOT WATER RECIRCULATION PUMP: PROVIDE BELL & GOSSETT TC-1, 7 DAY, ONE CIRCUIT, SINGLE POLE SINGLE THROW, ELECTRONIC TIME SWITCH OR EQUAL. TIME SWITCH SHALL BE MOTOR RATED (1 HP @ 120 VOLT, SINGLE PHASE), MINIMUM OF 20 SET POINTS (14 ON/OFF CYCLES) AND BATTERY BACK-UP; FIELD VERIFY EXACT LOCATION.
22. WATER HEATER: PROVIDE JUNCTION BOX ON DEDICATED, GFCI PROTECTED, CIRCUIT; FIELD VERIFY EXACT MOUNTING LOCATION WITH INSTALLING CONTRACTOR.
23. FILTER BOOSTER PUMP: PROVIDE RECEPTACLE ON DEDICATED CIRCUIT; FIELD VERIFY EXACT MOUNTING LOCATION WITH INSTALLING CONTRACTOR.
24. REMOTE CONDENSER FOR ICE MACHINE (23181); FIELD VERIFY EXACT LOCATION. PROVIDE NEMA 3R DISC POWER AND CONTROL WIRING PER MANUFACTURER'S WRITTEN INSTRUCTIONS. SEE M501 FOR ROOF CURB/SUPPORT AND REFRIG PIPE PENETRATION DETAILS.
25. PROVIDE "SHOW WINDOW" RECEPTACLE FLUSH MOUNTED IN WALL OR CEILING WITHIN 18" OF TOP OF WINDOW, 1 PER 12 LF OF WINDOW OR MAJOR FRACTION THEREOF (NEC 210.62).
26. SEE CONNECTION DIAGRAM IN THIS SHEET.

FOR CONSTRUCTION

© 2019 STARBUCKS COFFEE COMPANY

STARBUCKS®
2401 UTAH AVENUE SOUTH
SEATTLE, WASHINGTON 98134
(206) 318-1575

THESE DRAWINGS AND THE PROJECT MANUAL ARE CONFIDENTIAL AND SHALL REMAIN THE SOLE PROPERTY OF STARBUCKS CORPORATION, WHICH IS THE OWNER OF THE COPYRIGHT IN THIS WORK. THEY SHALL NOT BE REPRODUCED (IN WHOLE OR IN PART), SHARED WITH THIRD PARTIES OR USED IN ANY MANNER ON OTHER PROJECTS OR EXTENSIONS TO THIS PROJECT WITHOUT THE PRIOR WRITTEN CONSENT OF STARBUCKS CORPORATION. THESE DRAWINGS AND SPECIFICATIONS ARE INTENDED TO EXPRESS DESIGN INTENT FOR A PROTOTYPICAL STARBUCKS STORE (WHICH IS SUBJECT TO CHANGE AT ANYTIME) AND DO NOT REFLECT ACTUAL SITE CONDITIONS. NEITHER PARTY SHALL HAVE ANY OBLIGATION NOR LIABILITY TO THE OTHER (EXCEPT STATED ABOVE) UNTIL A WRITTEN AGREEMENT IS FULLY EXECUTED BY BOTH PARTIES.

STARBUCKS TEMPLATE VERSION: i2021-09-13

Design Forum Architects Inc.
2056 Byers Rd
Miamisburg, OH 45342
Tel: (844) 804-7700
Donald J. Rethman
Architect In Charge
License: AR00017303

Design Forum Engineering
2056 Byers Rd
Miamisburg, OH 45342
Tel: (844) 804-7700
Timothy L. Raberding, PE
Professional Engineer
License: 62078

PROJECT NAME:
US 98 & GRIFFIN RD

PROJECT ADDRESS:
3105 US-98 NORTH
LAKELAND, FLORIDA 33801

STORE #:	80004
PROJECT #:	96892-001
ISSUE DATE:	2025-09-26
DESIGN MANAGER:	ASHLEY ASUEIRAS
PRODUCTION DESIGNER:	ANDY MCLOUD
CHECKED BY:	DONALD RETHMAN

Revision Schedule

Rev	Date	Description
2	10/3/25	Revision 2

SHEET TITLE:
ELECTRICAL DESIGN PLAN
SCALE:

SHEET NUMBER:
E101

10/9/2025 1:14:53 PM Autodesk Docs://US 98 and Griffin - Starbucks/TI_US 98 & Griffin Rd-MEP_R25_permit.rvt

LIGHTING FIXTURE SCHEDULE

DESIGN ID	QUANTITTY	DESCRIPTION	RESPONSIBILITY	MODEL	LAMP	MAX WATTS
14893	1	LED PICTURE LIGHT TRADITIONAL - 14IN 355MM - BRONZE	SB-GC	DOLAN HOSPITALITY: #547668	INTEGRATED LED	5
19044	2	LED EXIT SIGN WITH EMERGENCY LIGHT - WHITE AND RED	SB-GC	NAVILITE #NXPCL3RWH	INTEGRATED LED	5
19050	2	LED EXIT SIGN RECESSED - ALUMINUM AND GREEN	SB-GC	LITHONIA #EDGR 1 G EL	INTEGRATED LED	5
19057	4	LED EMERGENCY LIGHT DOUBLE - BLACK	SB-GC	NAVILITE #N1WHHO	INTEGRATED LED	5
20660	1	PENDANT - ANDLIGHT SPOTLIGHT VOLUMES - BLACK	SB-GC	ANDLIGHT: SPO-D-A-BK	(1) 6.5W E26, (1) 4.5W A15	11
20661	1	PENDANT - ANDLIGHT SPOTLIGHT VOLUMES - BLACK	SB-GC	ANDLIGHT : SPO-D-B-BK	(1) 6.5W E26, (1) 4.5W A15	11
20662	1	PENDANT - ANDLIGHT SPOTLIGHT VOLUMES - BLACK	SB-GC	ANDLIGHT: SPO-B-D-BK	(1) 6.5W E26, (1) 4.5W A15	11
20663	1	PENDANT - ANDLIGHT SPOTLIGHT VOLUMES - BLACK	SB-GC	ANDLIGHT: SPO-D-B-BK	(1) 6.5W E26, (1) 4.5W A15	11
20750	2	SCONCE - KUZCO PLUTO TRIPLE - VINTAGE BRASS	SB-GC	KUZCO: #ZVL47321-VB-2700K	INTEGRATED LED	17
20778	1	SCONCE - RBW CRISP - FROSTED	SB-GC	RBW #CR-S12-27-120-IP65	INTEGRATED LED	9
21227	3	LED SECURITY LIGHT WST - BLACK - 1500LM FORWARD - 90 MIN BATTERY BACKUP		LITHONIA: #WST LED P1 30K VF MVOLT BBW DBLXD E7WC	INTEGRATED LED	
21771	43	CAN - LED ADJUSTABLE RECESSED - 3IN 75MM - BLACK - 800LM FLOOD	SB-GC	ALPHABET #NU3-RA-SW-13LM-27K-90CRI-S35-120-DIM10-NC-BL-BL BATTERY BACKUP FOR LIGHTS INDICATED WITH EM	INTEGRATED LED	12
21774	6	CAN - LED ADJUSTABLE RECESSED - 3IN 75MM - WHITE - 700LM WF	SB-GC	ALPHABET #NU3-RA-SW-10LM-27K-90CRI-D60-120-DIM10-NC-BK-BK EM7 BATTERY BACKUP FOR LIGHTS INDICATED WITH EM	INTEGRATED LED	12
22215	5	STRIP - LED TAPE IN HOUSING - VARIABLE LENGTH - BLACK - 350LM PER FT	SB-GC	LUMINII #LL91STP-MO-27K-NC-NC-C1	INTEGRATED LED	3
23055	5	TROFFER - LED RECESSED - 24X48IN 600X1200MM - WHITE - 2700K	SB-GC	ILP #PAN24-36WLED-U-35	INTEGRATED LED	29
24114	3	PENDANT - PENSEE - GREEN AND GOLD	SB-GC	SEED LIGHTING: SG-7792P-GN		5
X7001	1	CB2 - POLAR BLACK CEMENT FLOOR LAMP	SB-GC	SKU:445828		40

TRACK SCHEDULE

DESIGN ID	QUANTITTY	DESCRIPTION	RESPONSIBILITY	MODEL	LAMP	MAX WATTS
12946	4	TRACK - WITH CONNECTORS - 6FT - BLACK	SB-GC	TRACK: (1) JUNO R4BL AND (1) R2BL END FEED CONN: (1) JUNO R38BL MINI CONNECTOR: (3) JUNO R23BL ADJUSTABLE CONN: (1) JUNO R20BL		0
12949	14	TRACK - WITH CONNECTORS - 12FT 365CM - BLACK - 1 CIRCUIT	SB-GC	JUNO (3)#R4FTBL, (2)#R23BL, (1)#R38BL		
21777	6	TRACK - LED FIXTURE WITH SNOOT - 3IN 75MM - BLACK - 1100LM SPOT	SB-GC	LEDRA #350440-13LM-30K-90CRI-20DEG-120-ELV-BK350440/SNOOTBK	INTEGRATED LED	14
21779	56	TRACK - LED FIXTURE WITH SNOOT - 3IN 75MM - BLACK - 1100LM FLOOD	SB-GC	LEDRA #350440-13LM-30K-90CRI-38DEG-120-ELV-BK350440/SNOOTBK	INTEGRATED LED	14

GENERAL NOTES

A. ALL FIXTURES IN WORK ROOM, BACK AND FRONT LINE, ABOVE CONDIMENT CART, AND ANY OTHER AREAS WHERE EXPOSED FOOD, CLEAN EQUIPMENT OR UTENSILS, OR UNWRAPPED SINGLE SERVICE ITEMS WILL BE EXPOSED, SHALL HAVE SHATTERPROOF LAMPS IF THE FIXTURE IS NOT LENSED. ARCHITECT OF RECORD TO INCLUDE APPROPRIATE LAMPS / FIXTURES ON DRAWINGS AND SCHEDULES, AND COMPLY WITH ANY ADDITIONAL JURISDICTIONAL LIGHTING REQUIREMENT.

B. PROVIDE GROMMET AT ALL CEILING PENETRATIONS FOR FIXTURES/SUPPORTS.

C. CENTER EMERGENCY/EXIT LIGHTS ABOVE DOORS, UNLESS OTHERWISE NOTED.

D. ADJUST FOCUS OF ALL TRACK AND RECESSED DIRECTIONAL LIGHTING TO FULLY ILLUMINATE ALL ARTWORK, MENU BOARDS, AND MERCHANDISE BAYS. COORDINATE AIMING WITH OWNER.

E. IF PENDANT CYLINDERS SUSPENDED LENGTH EXCEEDS 48" (1220MM) FROM CEILING, REPLACE WITH SURFACE MOUNTED CYLINDER CANS AND SUSPEND WITH GENERAL CONTRACTOR SUPPLIED CONDUIT AND J-BOX TO INDICATED HEIGHT.

F. REFER TO POWER PLAN FOR PANELBOARD LOCATIONS.

RESPONSIBILITY LEGEND

GC-GC	FURNISHED BY GENERAL CONTRACTOR - INSTALLED BY GENERAL CONTRACTOR
LL-LL	FURNISHED BY LANDLORD - INSTALLED BY LANDLOARD
SB-GC	FURNISHED BY STARBUCKS - INSTALLED BY GENERAL CONTRACTOR
SB-SB	FURNISHED BY STARBUCKS - INSTALLED BY STARBUCKS
VD-VD	FURNISHED BY VENDOR - INSTALLED BY VENDOR

NOTE:
ALL RESPONSIBILITIES TO BE CONFIRMED WITH STARBUCKS DESIGN MANAGER PRIOR TO ORDERING/CONSTRUCTION.

CONTROL ZONE SCHEDULE

LIGHTING SWITCHBANK

a - BACK BAR/PREP AREA LIGHTS
b - SALES/SEATING LIGHTS*
c - RR VESTIBULE LIGHTS
d - ACCENT LIGHTS
e - BACK OF HOUSE LIGHTS
f - PATIO FANS
g - PATIO RECEPTACLES
T - 2 HR MAX TIMED OVERRIDE

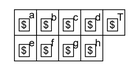

* - PROVIDE COMPATIBLE DIMMER FOR SALES/SEATING TRACK LIGHTING (COORDINATE DIMMER REQUIREMENTS WITH VENDOR)

KEYED NOTES

1. ELECTRICAL CONTRACTOR TO VERIFY THAT A WEATHERPROOF SWITCH IS PROVIDED BY THE SIGN COMPANY. IF NOT ONE MUST BE PROVIDED AND INSTALLED BY THE ELECTRICAL CONTRACTOR.
2. ELECTRICAL CONTRACTOR TO PROVIDE DIRECT ACCESSIBLE POWER FOR ALL ELECTRICAL SIGNAGE WITHIN 6'-0" OF THE SIGN LOCATION PROVIDE CONDUIT AND STUB THRU WALL, J-BOX AND ANY REQUIRED O.C.P. CIRCUIT THROUGH NEW LIGHTING CONTROL PANEL (SEE DETAILS ON E-502 AND E-601).
3. SWITCH BANK LOCATION: SEE CONTROL ZONE DETAIL ON THIS SHEET. SWITCHES SHALL SERVE AS LOCAL OFF SWITCH.
4. EMERGENCY EGRESS LIGHTING OUTSIDE OF EXIT DOOR. CONNECT TO CIRCUIT SERVING EXISTING EXTERIOR LIGHTING.
5. PROVIDE 4A CURRENT LIMITING DEVICE (CLD) #RCLF11BL-TCL4BL. ALL INDICATED TRACK SHALL BE CIRCUITED VIA THIS CLD - MONOPOINT MOUNTED TRACK HEADS SHALL NOT BE CIRCUITED VIA CLD.
6. LED LIGHT STRIP: PROVIDE ALL REQUIRED MOUNTING BRACKETS, POWER SUPPLIES, CONNECTORS, ETC FOR A COMPLETE AND FUNCTIONING SYSTEM. REFER TO ARCHITECTURAL DETAILS FOR ADDITIONAL MOUNTING INFORMATION.
7. CEILING MOUNTED OCCUPANCY SENSOR SHALL CONTROL THE LIGHTS IN THIS ROOM. SET FOR 5 MINUTE TIME DELAY.
8. EXIT SIGNS, EMERGENCY LIGHTS AND NIGHT LIGHTS SHALL BE CIRCUITED TO LOCAL CIRCUIT AHEAD OF ANY CONTROLS.
9. PROVIDE 90 MINUTE BATTERY BACKUP FOR THIS LIGHT FIXTURE TO BE USED AS EMERGENCY LIGHTING IN EVENT OF POWER LOSS. SEE LIGHTING SCHEDULE FOR BATTERY BACKUP ACCESSORY ORDERING CODE.
10. LOCATION OF LIGHTING CONTROL PANEL (SEE CONTROL ZONE SCHEDULE THIS SHEET AND DETAILS ON E-502 AND E-601).
11. SEE DETAIL 2.
12. PROVIDE 120V CONNECTION TO PATIO FAN. COORDINATE ANY CONTROL WIRING REQUIREMENTS WITH INSTALLING CONTRACTOR. SHOWN ONLY FOR REFERENCE, COORDINATE EXACT LOCATION IN THE FIELD.
13. EXISTING EXTERIOR LIGHTING TO REMAIN: MODIFY EXISTING CIRCUITING TO ROUTE THRU NEW LIGHTING CONTROL PANEL. FIELD VERIFY NUMBER OF CIRCUITS.

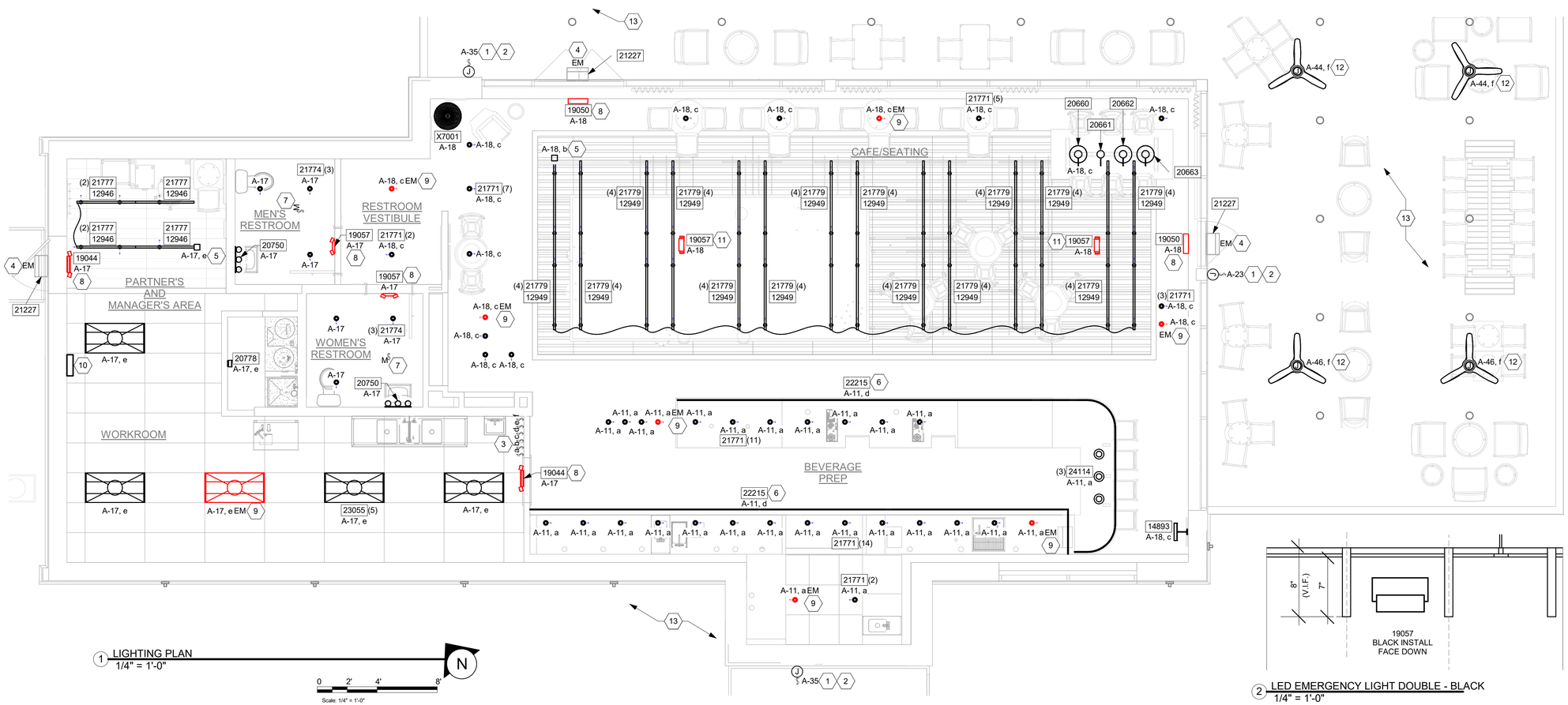

1 LIGHTING PLAN
1/4" = 1'-0"

2 LED EMERGENCY LIGHT DOUBLE - BLACK
1/4" = 1'-0"

FOR CONSTRUCTION

© 2019 STARBUCKS COFFEE COMPANY

STARBUCKS®
2401 UTAH AVENUE SOUTH
SEATTLE, WASHINGTON 98134
(206) 318-1575

THESE DRAWINGS AND THE PROJECT MANUAL ARE CONFIDENTIAL AND SHALL REMAIN THE SOLE PROPERTY OF STARBUCKS CORPORATION, WHICH IS THE OWNER OF THE COPYRIGHT IN THIS WORK. THEY SHALL NOT BE REPRODUCED (IN WHOLE OR IN PART), SHARED WITH THIRD PARTIES OR USED IN ANY MANNER ON OTHER PROJECTS OR EXTENSIONS TO THIS PROJECT WITHOUT THE PRIOR WRITTEN CONSENT OF STARBUCKS CORPORATION. THESE DRAWINGS AND SPECIFICATIONS ARE INTENDED TO EXPRESS DESIGN INTENT FOR A PROTOTYPICAL STARBUCKS STORE (WHICH IS SUBJECT TO CHANGE AT ANYTIME) AND DO NOT REFLECT ACTUAL SITE CONDITIONS. NEITHER PARTY SHALL HAVE ANY OBLIGATION NOR LIABILITY TO THE OTHER (EXCEPT STATED ABOVE) UNTIL A WRITTEN AGREEMENT IS FULLY EXECUTED BY BOTH PARTIES.

STARBUCKS TEMPLATE VERSION: i2021-09-13

Design Forum Architects Inc.
2056 Byers Rd
Miamisburg, OH 45342
Tel: (844) 804-7700
Donald J. Rethman
Architect In Charge
License: AR00017303

Design Forum Engineering
2056 Byers Rd
Miamisburg, OH 45342
Tel: (844) 804-7700
Timothy L. Raberding, PE
Professional Engineer
License: 62078

PROJECT NAME:
US 98 & GRIFFIN RD

PROJECT ADDRESS:
3105 US-98 NORTH
LAKELAND, FLORIDA 33801

STORE #:	80004
PROJECT #:	96892-001
ISSUE DATE:	2025-09-26
DESIGN MANAGER:	ASHLEY ASUEIRAS
PRODUCTION DESIGNER:	ANDY MCLOUD
CHECKED BY:	DONALD RETHMAN

Revision Schedule

Rev	Date	Description
2	10/3/25	Revision 2

SHEET TITLE:
LIGHTING DESIGN PLAN

SCALE:

SHEET NUMBER:
E102

10/9/2025 1:14:58 PM Autodesk Docs://US 98 and Griffin - Starbucks/TI_US 98 & Griffin Rd-MEP_R25_permit.rvt

DATA DEVICE SCHEDULE

DESIGN ID	COUNT	DESCRIPTION	FURN. BY	INST. BY	COMMENTS
AUDIO VISUAL					
10005	1	MUSIC SYSTEM	SB	GC	
10013	5	DT QUEUE CAMERA	SB	GC	GC TO COORDINATE WITH VENDOR
10017	4	SPEAKER SURFACE MOUNTED	SB	GC	BLACK EXTERIOR; GC TO INSTALL AND TEST SYSTEM
10076	1	AMPLIFIER - 60W	SB	GC	
12336	1	DT TIMER SYSTEM	SB	SB	GC TO COORDINATE WITH VENDOR
19493	3	SPEAKER PENDANT MOUNTED - BLACK	SB	GC	GC TO INSTALL AND TEST SYSTEM
22725	1	DT DIGITAL PRODUCTION MONITOR	SB	SB	PART OF RETAIL IT EQUIPMENT PACKAGE
22726	1	DT POS MONITOR ARM TRIPLE SURFACE MOUNTED	SB	SB	PART OF RETAIL IT EQUIPMENT PACKAGE
24351	1	DT COMMUNICATION SYSTEM	SB	SB	GC TO COORDINATE WITH VENDOR
DATA					
10000	1	PHONE 1 LINE	SB	GC	@POS
10001	1	PHONE 2 LINE	SB	GC	@MANAGER'S DESK
10002	1	COMPUTER MANAGER WORKSTATION	SB	SB	
10007	1	PRINTER MANAGER WORKSTATION	SB	GC	
18744	1	EQUIPMENT RACK WITH LOCK - 24IN 610MM	SB	SB	
20294	4	IOT MODULE	SB	GC	
POINT OF SALE					
10008	2	POS - REGISTER WITH COMPACT CASH DRAWER	SB	GC	
10014	3	MOBILE POS PRINTER	SB	GC	
10022	1	MONEY COUNTER	SB	GC	
10029	6	POS BANK	SB	GC	
10075	4	CUP LABELER	SB	GC	
14677	1	POS - DT TENDERING REGISTER	SB	GC	PART OF RETAIL IT EQUIPMENT PACKAGE
14678	1	POS - DT EXPEDITOR	SB	GC	PART OF RETAIL IT EQUIPMENT PACKAGE
SECURITY					
10024	1	SAFE LH - 20X18X26IN 510X455X660MM	SB	GC	
10028	1	SAFE BASE	SB	GC	

ELECTRICAL SYMBOL LEGEND

- TELEPHONE
- DATA OUTLET
- THERMOSTAT(EMS)
- CARBON MONOXIDE SENSOR
- JUNCTON BOX
- CARBON MONOXIDE SENSOR
- SPEAKER

SECURITY NOTES

A. ENTRY CAMERA: CAPTURE ENTRY DOORWAY AND CUSTOMER TOP OF HEAD TO KNEES. PROVIDE (1) CAMERA AT EACH ENTRY.

B. POS CAMERA: PRIMARY OBJECTIVE IS CUSTOMER; SECONDARY IS TRANSACTION PLANE. CAPTURE MULTIPLE POS LOCATIONS.

C. SAFE CAMERA: POSITION TO VIEW FROM HANDLE SIDE OF DOOR. POS CAMERA CAN BE USED WHEN SAFE IS LOCATED BELOW TERMINALS.

D. DRIVE THRU CAMERA: PRIMARY OBJECTIVE IS CUSTOMER; SECONDARY IS POS. IDEAL PLACEMENT WOULD CAPTURE BOTH.

E. BOH CAMERA: CAPTURES CASH HANDLING.

F. CARBON MONOXIDE: AT LEAST ONE CARBON MONOXIDE (CO) DETECTOR TO BE LOCATED IN THE BACK OF HOUSE. PROVIDE SECOND DETECTOR IN CAFE IF SPACE INCLUDES A FIREPLACE.

MUSIC SYSTEM NOTES

A. GC SHALL INSTALL SPEAKERS AND WIRING PER DRAWING.

B. SPEAKER PLACEMENT: LOCATE (1) PER 250 SF OF CAFE SPACE @14'-0" MIN TO 18'-0" MAX [4267-5486MM] O.C.

C. SPEAKER PAINTING: SPEAKER GRILLS CAN BE PAINTED. NOTE: GRILL HOLES SHALL REMAIN OPEN.

D. G.C. SHALL INSTALL MUSIC SYSTEM, CONNECT WIRING, AND TEST.

RESPONSIBILITY LEGEND

GC-GC	FURNISHED BY GENERAL CONTRACTOR - INSTALLED BY GENERAL CONTRACTOR
LL-LL	FURNISHED BY LANDLORD - INSTALLED BY LANDLOARD
SB-GC	FURNISHED BY STARBUCKS - INSTALLED BY GENERAL CONTRACTOR
SB-SB	FURNISHED BY STARBUCKS - INSTALLED BY STARBUCKS
VD-VD	FURNISHED BY VENDOR - INSTALLED BY VENDOR

NOTE:
ALL RESPONSIBILITIES TO BE CONFIRMED WITH STARBUCKS DESIGN MANAGER PRIOR TO ORDERING/CONSTRUCTION.

NOTE:
1" MIN CONDUIT SIZE

GENERAL NOTES

A. FURNISH AND INSTALL A COMPLETE AND OPERATING SYSTEM. ALL ITEMS ARE NOT NECESSARILY SHOWN.

B. ELECTRICAL CONTRACTOR RESPONSIBLE FOR SITE INVESTIGATION PRIOR TO START OF WORK TO REVEAL FULL SCOPE OF WORK.

C. DIMENSIONS ARE TO FINISH FACE UNLESS OTHERWISE NOTED.

D. REFER TO DETAIL SHEETS FOR EXACT LOCATIONS AND MOUNTING HEIGHTS OF ELECTRICAL DEVICES.

E. THE ELECTRICAL CONTRACTOR IS RESPONSIBLE FOR CONFIRMING ALL VOLTAGE REQUIREMENTS ON ALL EQUIPMENT AND PROVIDING BUCK-BOOST TRANSFORMERS AS MAY BE NEEDED FOR CODE. ALL ARE NOT NECASSARILY INDICATED.

F. ELECTRICAL CONTRACTOR SHALL COORDINATE WITH PLUMBING AND HEATING, VENTILATING, AND AIR CONDITIONING (HVAC) CONTRACTORS FOR ANY ADDITIONAL EQUIPMENT NEEDING POWER.

G. ALL FUTURE EQUIPMENT NEEDED HEREIN SHALL BE PROVIDED WITH AN APPROPRIATE RECEPTACLE AND FULLY WIRED. EVEN IF NOT SPECIFICALLY INDICATED.

H. GROUND FAULT CIRCUIT INTERRUPTER (GFCI) BREAKERS (NOT RECEPTACLES) SHALL BE UTILIZED WHERE REQUIRED BY CODE AND AT ANY FLOOR BOXES. PROVIDE DEDICATED NEUTRAL WIRE FOR ALL THESE CIRCUITS.

I. EQUIPMENT REQUIRES CONNECTION TO THE BUILDING ELECTRICAL SYSTEM. FURNISH AND INSTALL ALL NECESSARY CONDUIT, WIRE, CONNECTIONS, RECEPTACLES AND OVERCURRENT PROTECTION NECESSARY TO ENSURE THE EQUIPMENT FUNCTIONED PROPERLY AND COMPLIES WITH ALL APPLICABLE LOCAL AND NATIONAL CODES. COORDINATE EQUIPMENT REQUIREMENTS WITH MANUFACTURER CUT SHEET PRIOR TO ROUGH-IN.

J. ALL BACK BAR AND FRONT BAR J-BOXES AND OUTLETS SHALL BE SURFACE MOUNTED. PROVIDE CONDUITS AS NEEDED AND (1) ADDITIONAL SPARE CONDUIT BETWEEN ALL J-BOXES FOR FUTURE ELECTRICAL REQUIREMENTS. ALL J-BOXES SHALL BE POSITIONED TO AVOID OBSTRUCTION OF ANY EQUIPMENT SUCH AS REFRIGERATORS AND DISHWASHERS.

K. STUB-UP POWER, DATA, AND PHONE CONDUITS 6" AFF IN THIS LOCATION.ROUTE POWER CONDUCTORS IN FLEXIBLE METAL CONDUIT TIGHT TO WALL FROM RECEPTACLES TO NEARBY RIGID STUB-UP AND BACK TO SERVING POWER PANEL. ROUTE DATA AND PHONE CONDUITS UNDER FLOOR BACK TO DATA RACK NEAR MANAGER'S WORKSTATION. LABEL DATA AND PHONE CONDUITS "FOR DATA CABLING". PROVIDE INSULATED BUSHINGS, AND PROVIDE PULL STRING FROM END TO END.

L. COORDINATE ALL CONCRETE TRENCHING/CORE DRILLING TO ENSURE THAT ANY UNDER SLAB UTILITIES, ETC., ARE NOT DAMAGED DURING FLOOR CUT AND OR CORE DRILLING. PRIOR APPROVAL AND COORDINATION WITH PROPERTY MANAGEMENT IS REQUIRED FOR ALL CONCRETE WORK. EC SHALL PROVIDE PATCHING/REPAIR TO CONCRETE AND VAPOR BARRIER AS REQUIRED.

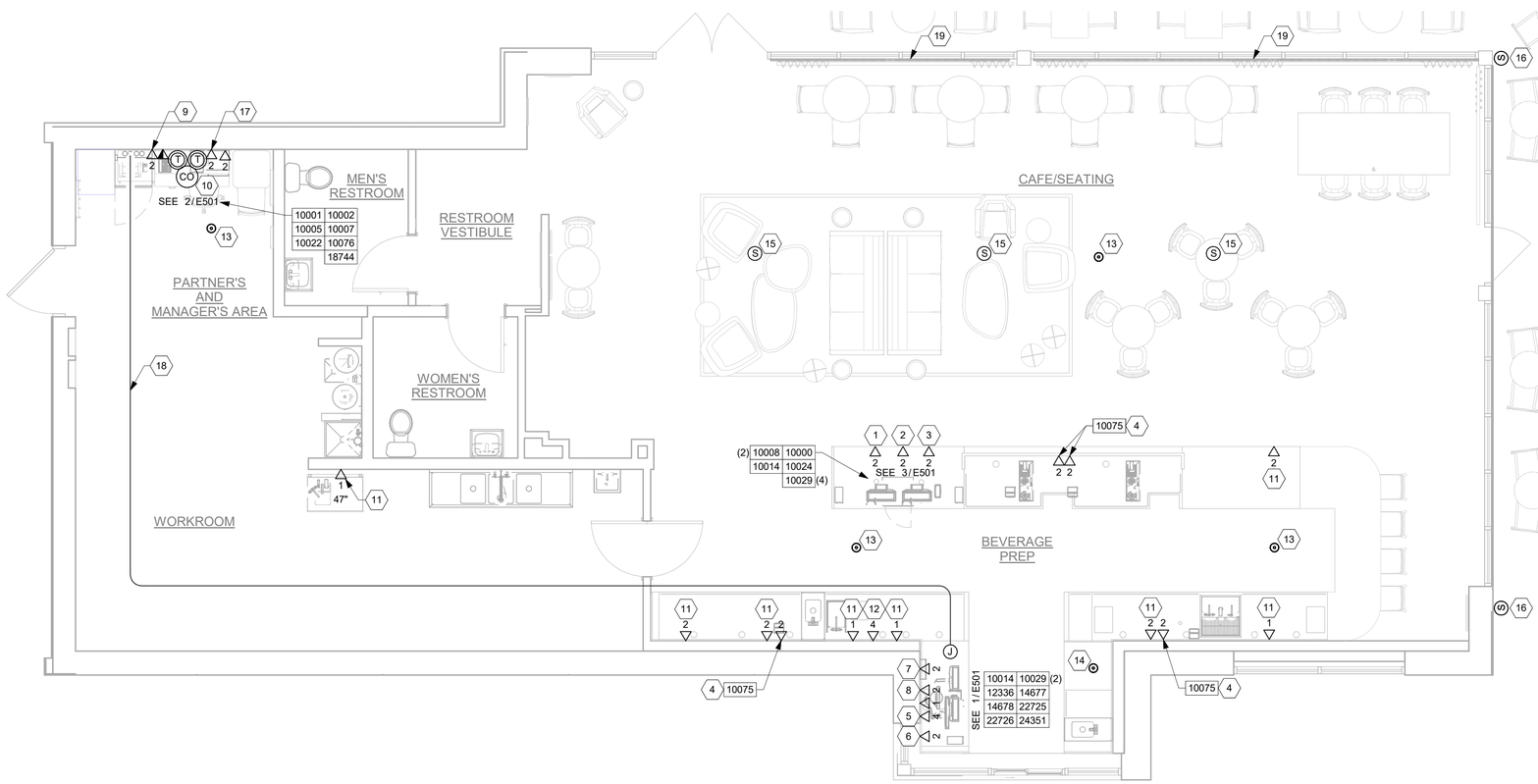

1 LOW VOLTAGE PLAN
1/4" = 1'-0"

Scale: 1/4" = 1'-0"

KEYED NOTES

1 SAFE: PROVIDE RECEPTACLE ON DEDICATED CIRCUIT. ADJACENT TO RECEPTACLE, PROVIDE J-BOX FOR SECURITY ALARM JACK AND ROUTE CONDUIT BACK TO SECURITY PANEL J-BOX. REFER TO MANAGER'S DESK DETAIL AND POS DETAIL ON E-501 FOR ADDITIONAL INFORMATION.

2 POS: PROVIDE RECEPTACLE ON DEDICATED CIRCUIT. ADJACENT TO RECEPTACLE, PROVIDE J-BOXES FOR TELEPHONE AND DATA. ROUTE CONDUIT(S) BACK TO MANAGER'S DESK. REFER TO MANAGER'S DESKDETAIL AND POS DETAIL ON E-501 FOR ADDITIONAL INFORMATION.

3 STUB UP POWER, DATA PHONE AND/OR SECURITY CONDUITS 6" AFF TO SERVE NEARBY DEVICES IN THIS LOCATION. ROUTE POWER CONDUCTORS IN FLEXIBLE METAL CONDUIT CONCEALED OR TIGHT-TO-WALL FROM RECEPTACLES TO NEARBY RIGID STUB UP AND BACK TO SERVING POWER PANEL. ROUTE DATA, PHONE AND SAFE CONDUITS UNDER FLOOR BACK TO DATA RACK NEAR MANAGER WORKSTATION. PROVIDE AN END-TO-END PULL STRING IN ALL DATA PHONE AND SAFE CONDUITS. LABEL EACH END OF PULL STRING WITH CONDUIT SYSTEM ("POS", "SECURITY", ETC.) AND DESTINATION ("DRIVE-THRU", "FRONT BAR", ETC.). PROVIDE INSULATED BUSHINGS ON ALL STUBBED-UP AND EXPOSED CONDUIT ENDS. REFER TO ARCHITECTURAL PENETRATION PLAN FOR ADDITIONAL INFORMATION.

4 CUP LABELER AND/OR MOBILE ORDER PRINTER: PROVIDE RECEPTACLE AND ADJACENT DATA BACKBOX AT SAME MOUNTING HEIGHT-COORDINATE LOCATION AND MOUNTING HEIGHT WITH OWNER'S RESENTATIVE PRIOR TO ROUGH IN. ROUTE 1" CONDUIT FROM BACKBOX TO DATA RACK NEAR MANAGER'S WORKSTATION.

5 DDT TENDERING REGISTER AND EXPEDITER POS. PROVIDE DOUBLE DUPLEX RECEPTACLE ON DEDICATED CIRCUIT. ADJACENT TO RECEPTACLE, PROVIDE J-BOX FOR DATA. ROUTE CONDUIT BACK TO MANAGER'S DESK. REFER TO MANAGER'S DESK DETAIL AND DRIVE-THRU POS DETAIL ON E-501 FOR ADDITIONAL INFORMATION.

6 DT VIDEO AND FUTURE USE. PROVIDE DOUBLE DUPLEX RECEPTACLE. ADJACENT TO RECEPTACLE, PROVIDE J-BOX FOR DATA. ROUTE CONDUIT BACK TO MANAGER'S DESK. REFER TO MANAGER'S DESK DETAIL AND DRIVE-THRU POS DETAIL ON E-501 FOR ADDITIONAL INFORMATION.

7 DT TIMER CONTROL UNIT AND MONITOR: PROVIDE DOUBLE DUPLEX RECEPTACLE. ADJACENT TO RECEPTACLE, PROVIDE J-BOX FOR DATA. ROUTE CONDUIT BACK TO MANAGER'S DESK.REFER TO MANAGER'S DESK DETAIL AND DRIVE-THRU POS DETAIL ON E-501 FOR ADDITIONAL INFORMATION.LL BACK BAR AND FRONT BAR J-BOXES AND OUTLETS SHALL BE SURFACE MOUNTED. PROVIDE CONDUITS AS NEEDED AND (1) ADDITIONAL SPARE CONDUIT BETWEEN ALL J-BOXES FOR FUTURE ELECTRICAL REQUIREMENTS. ALL J-BOXES SHALL BE POSITIONED TO AVOID OBSTRUCTION OF ANY EQUIPMENT SUCH AS REFRIGERATORS AND DISHWASHERS.

8 DT TIMER SIGNAL PROCESSOR AND WIRELESS HEADSET BASE PROVIDE (2)DUPLEX RECEPTACLE. ADJACENT TO RECEPTACLE, PROVIDE J-BOX FOR DATA. ROUTE CONDUIT BACK TO MANAGER'S DESK. REFER TO MANAGER'S DESK DETAIL AND DRIVE-THRU POS DETAIL ON E-501 FOR ADDITIONAL INFORMATION.

9 TELEPHONE AND DATA OUTLETS FOR MANAGER'S DESK: REFER TO MANAGER'S DESK DETAIL ON E-501 FOR ADDITIONAL INFORMATION.

10 CARBON MONOXIDE DETECTOR AND THERMOSTATS FOR ROOF TOP HVAC UNITS: COORDINATE INSTALLATION AND CONNECTION WITH MECHANICAL CONTRACTOR.COORDINATE LOCATION(S) WITH OWNER'S REPRESENTATIVE. VERIFY LOCATIONS/CONNECTIONS PRIOR TO INSTALLATION.

11 DATA OUTLET FOR FUTURE USE: PROVIDE BACKBOX MOUNTED AT 26" AFF. ROUTE 3/4 CONDUIT FROM BACKBOX TO DATA RACK NEAR MANAGER'S WORK STATION. LABEL CONDUIT FOR DATA CABLING AND PROVIDE PULL STRING FROM END TO END.

12 PROVIDE RECEPTACLE AND DATA OUTLET CENTERED HORIZONTALLY. BEHIND MENU BOARD FOR FUTURE DIGITAL MENU BOARD. PROVIDE ACKBOX FOR DATA OUTLET. ROUTE 1" CONDUIT FROM BACKBOX TO DATA RACK NEAR MANAGER'S WORK STATION. LABEL CONDUIT FOR DATA CABLING AND PROVIDE PULL STRING FROM END TO END. SEEMINTERIOR ELEVATIONS FOR MENU BOARD LOCATIONS.

13 SECURITY CAMERA: CEILING MOUNT TYPICAL; IN OPEN CEILING CONDITION, LOCATE B.O. CAMERA AT SAME HEIGHT AS STORE LIGHTING.

14 DRIVE THRU CAMERA: LOCATE 10'-0" FROM WINDOW WITH CLEAR VIEW OF CUSTOMER AND DT POS.

15 PENDANT SPEAKER: MOUNT AT 17'-2" AFF OR AS HIGH AS CEILING HEIGHT PERMITS. COLOR: BLACK.

16 WALL MOUNTED SPEAKER: MOUNT AT 9'-6" AFF OR AS HIGH AS CEILING HEIGHT PERMITS. COLOR: BLACK OR PAINT TO MATCH ADJACENT FINISH.

17 AMPLIFIER: LOCATE ON SHELVING ABOVE MANAGER'S WORKSTATION (SEE DETAIL ON E-501).

18 CONDUIT PATHWAY ABOVE CEILING FOR FUTURE ANTENNA COAXIAL CABLE. MINIMUM 1-1/4" CONDUIT WITH THICK END-TO-END PULL STRING. MINIMUM 8-1/2" RADIUS BENDS, MAXIMUM 100'-0" RUN, NO CONSECUTIVE 90-DEGREE BENDS. TERMINATE AT J-BOX WITH COVER PLATE AT CEILING/WALL WITHIN 2'-0" OF BUMP BASE STATION AND ABOVE BOH CEILING ADJACENT FUTURE PENETRATION ZONE. FIELD VERIFY EXACT ROUTING AND TERMINATION POINTS.

19 POWERSTRIPS ALONG BASE OF STORE FRONT.

FOR CONSTRUCTION

© 2019 STARBUCKS COFFEE COMPANY

STARBUCKS®
2401 UTAH AVENUE SOUTH
SEATTLE, WASHINGTON 98134
(206) 318-1575

THESE DRAWINGS AND THE PROJECT MANUAL ARE CONFIDENTIAL AND SHALL REMAIN THE SOLE PROPERTY OF STARBUCKS CORPORATION, WHICH IS THE OWNER OF THE COPYRIGHT IN THIS WORK. THEY SHALL NOT BE REPRODUCED (IN WHOLE OR IN PART), SHARED WITH THIRD PARTIES OR USED IN ANY MANNER ON OTHER PROJECTS OR EXTENSIONS TO THIS PROJECT WITHOUT THE PRIOR WRITTEN CONSENT OF STARBUCKS CORPORATION. THESE DRAWINGS AND SPECIFICATIONS ARE INTENDED TO EXPRESS DESIGN INTENT FOR A PROTOTYPICAL STARBUCKS STORE (WHICH IS SUBJECT TO CHANGE AT ANYTIME) AND DO NOT REFLECT ACTUAL SITE CONDITIONS. NEITHER PARTY SHALL HAVE ANY OBLIGATION NOR LIABILITY TO THE OTHER (EXCEPT STATED ABOVE) UNTIL A WRITTEN AGREEMENT IS FULLY EXECUTED BY BOTH PARTIES.

STARBUCKS TEMPLATE VERSION: i2021-09-13

Design Forum Architects Inc.
2056 Byers Rd
Miamisburg, OH 45342
Tel: (844) 804-7700
Donald J. Rethman
Architect In Charge
License: AR00017303

Design Forum Engineering
2056 Byers Rd
Miamisburg, OH 45342
Tel: (844) 804-7700
Timothy L. Raberding, PE
Professional Engineer
License: 62078

PROJECT NAME:
US 98 & GRIFFIN RD

PROJECT ADDRESS:
3105 US-98 NORTH
LAKELAND, FLORIDA 33801

STORE #:	80004
PROJECT #:	96892-001
ISSUE DATE:	2025-09-26
DESIGN MANAGER:	ASHLEY ASUEIRAS
PRODUCTION DESIGNER:	ANDY MCLOUD
CHECKED BY:	DONALD RETHMAN

Revision Schedule

Rev	Date	Description
2	10/3/25	Revision 2

SHEET TITLE:
LOW VOLTAGE DESIGN PLAN
SCALE:

SHEET NUMBER:
E103

10/9/2025 1:15:01 PM Autodesk Docs://US 98 and Griffin - Starbucks/TI_US 98 & Griffin Rd-MEP_R25_permit.rvt

EQUIPMENT RACK SCHEDULE
UPS
IPS EQUIPMENT
ROUTER
NETWORK SWITCH
PATCH PANEL
SECURITY RECORDER (NVR)
SECURITY KEYBOARD
PRODUCTION CONTROLLER DEVICES

LOW VOLTAGE CABLE BUNDLES		
1 POS	2 SECURITY	3 MUSIC
HIGH SPEED INTERNET	SECURITY PANEL	PLAY NETWORK
DEMARC EXTENSION	FUTURE USE	SPEAKERS
POS LAN	- - - - - - - - - - - - - - - - - -	- - - - - - - - - - - - - - - - - -
DT TIMER	- - - - - - - - - - - - - - - - - -	- - - - - - - - - - - - - - - - - -

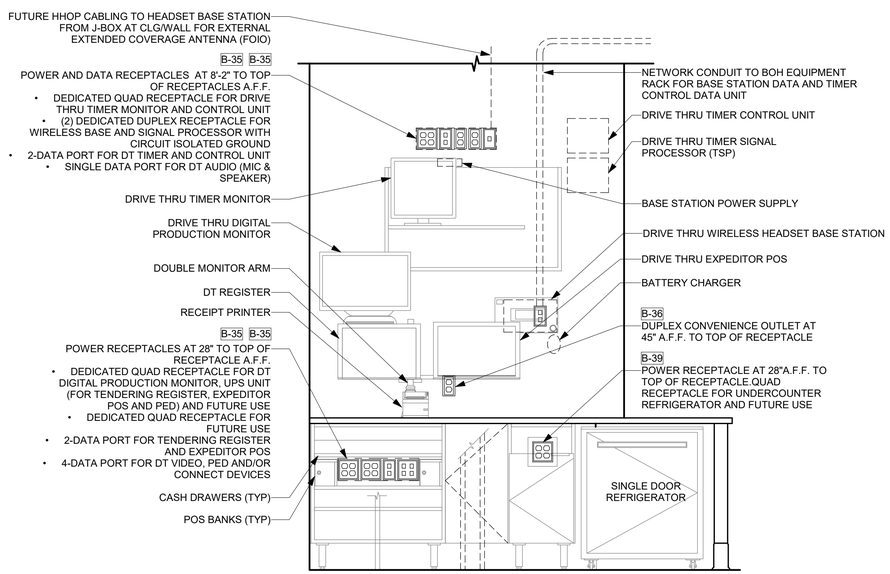

1 DRIVE-THRU POS DETAIL
N.T.S.

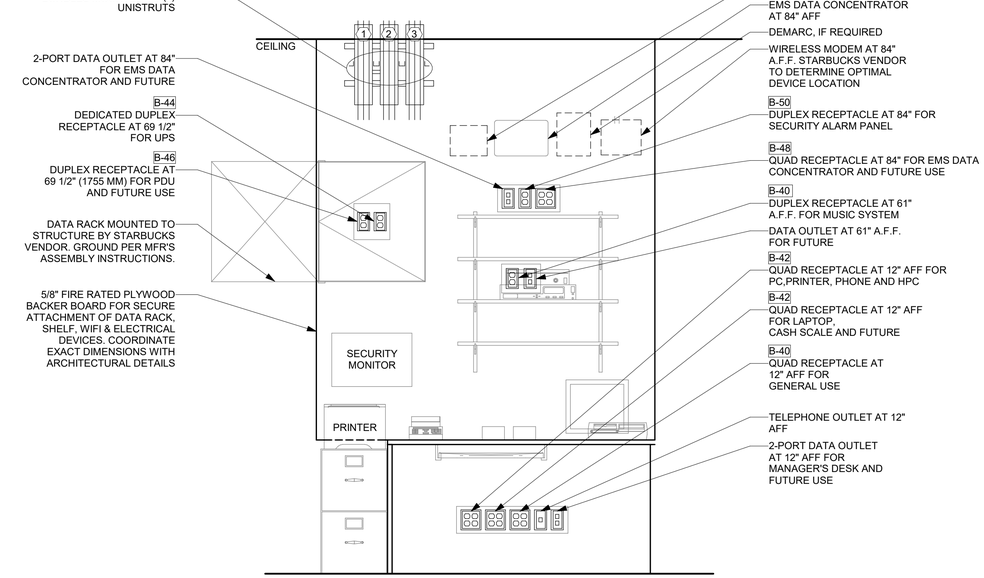

2 MANAGER'S DESK DETAIL
N.T.S.

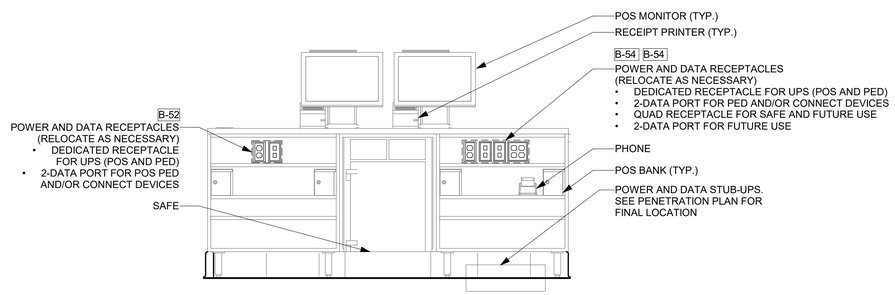

3 POS DETAIL
N.T.S.

FOR CONSTRUCTION

© 2019 STARBUCKS COFFEE COMPANY

STARBUCKS®
2401 UTAH AVENUE SOUTH
SEATTLE, WASHINGTON 98134
(206) 318-1575

THESE DRAWINGS AND THE PROJECT MANUAL ARE CONFIDENTIAL AND SHALL REMAIN THE SOLE PROPERTY OF STARBUCKS CORPORATION, WHICH IS THE OWNER OF THE COPYRIGHT IN THIS WORK. THEY SHALL NOT BE REPRODUCED (IN WHOLE OR IN PART), SHARED WITH THIRD PARTIES OR USED IN ANY MANNER ON OTHER PROJECTS OR EXTENSIONS TO THIS PROJECT WITHOUT THE PRIOR WRITTEN CONSENT OF STARBUCKS CORPORATION. THESE DRAWINGS AND SPECIFICATIONS ARE INTENDED TO EXPRESS DESIGN INTENT FOR A PROTOTYPICAL STARBUCKS STORE (WHICH IS SUBJECT TO CHANGE AT ANYTIME) AND DO NOT REFLECT ACTUAL SITE CONDITIONS. NEITHER PARTY SHALL HAVE ANY OBLIGATION NOR LIABILITY TO THE OTHER (EXCEPT STATED ABOVE) UNTIL A WRITTEN AGREEMENT IS FULLY EXECUTED BY BOTH PARTIES.

STARBUCKS TEMPLATE VERSION: i2021-09-13

Design Forum Architects Inc.
2056 Byers Rd
Miamisburg, OH 45342
Tel: (844) 804-7700
Donald J. Rethman
Architect In Charge
License: AR00017303

Design Forum Engineering
2056 Byers Rd
Miamisburg, OH 45342
Tel: (844) 804-7700
Timothy L. Raberding, PE
Professional Engineer
License: 62078

PROJECT NAME:
US 98 & GRIFFIN RD

PROJECT ADDRESS:
3105 US-98 NORTH
LAKELAND, FLORIDA 33801

STORE #:	80004
PROJECT #:	96892-001
ISSUE DATE:	2025-09-26
DESIGN MANAGER:	ASHLEY ASUEIRAS
PRODUCTION DESIGNER:	ANDY MCLOUD
CHECKED BY:	DONALD RETHMAN

Revision Schedule

Rev	Date	Description
2	10/3/25	Revision 2

SHEET TITLE:
ELECTRICAL DETAILS

SCALE:

SHEET NUMBER:
E501

10/9/2025 1:15:02 PM Autodesk Docs://US 98 and Griffin - Starbucks/TI_US 98 & Griffin Rd-MEP_R25_permit.rvt

SURVEYOR EMS COMPONENTS

	VENSTAR PART	SBUX ITEM #	DESCRIPTION	QUANTITY
	DC400	011029485	DATA CONCENTRATOR	1
	OTS400	011029487	OUTDOOR TEMPERATURE SENSOR	1
	ECP400	011029489	EQUIPMENT CONTROL PAC	1 PER HVAC
	CT414	011029490	COMMUNICATING THERMOSTAT	1 PER HVAC
	SP400	011029491	SENSOR PAC	1 PER HVAC
	RS410	011029492	WALL MOUNT REMOTE SENSOR	1 PER FOH HVAC
OPTIONAL →	RS420	011050767	NARROW DROP DOWN SENSOR	1 PER BOH HVAC

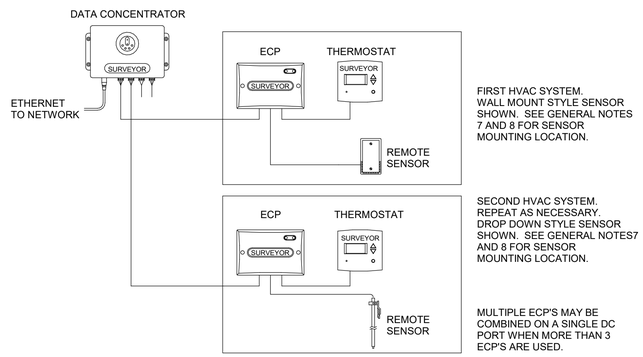

1 VENSTAR EMS - NO LIGHTING CONTROL - BASIC LOW VOLTAGE WIRE RUNS
N.T.S.

GENERAL NOTES

1. SURVEYOR ENERGY MANAGEMENT SYSTEM HARDWARE IS SUPPLIED BY STARBUCKS.
2. DRAWING FOR GENERAL INFORMATION, DESIGN INTENT, AND COORDINATION ONLY.
3. LOCAL BUILDING CODES TAKE PRECEDENCE OVER THIS DOCUMENT.
4. NOT ALL WIRING IS SHOWN ON THIS DRAWING. FOR CLARITY, ONLY ONE EXAMPLE OF EACH TYPE OF DEVICE IS SHOWN.
5. REFER TO THE SURVEYOR INSTALLATION INSTRUCTIONS FOR EACH COMPONENT FOR DETAILED WIRING AND ADDITIONAL CRITICAL INFORMATION.
6. CAUTION! INSTALLATION REQUIRES THE REMOVAL OF SAFETY COVERS AND EXPOSE THE INSTALLER TO HIGH VOLTAGE AND ELECTRICAL HAZARDS. USE OF A LICENSED ELECTRICIAN IS REQUIRED. FOLLOW ALL APPROPRIATE SAFETY PRECAUTIONS. ADDITIONAL SAFETY INFORMATION IS IN THE SURVEYOR INSTALLATION MANUALS.
7. WALL MOUNTED REMOTE SENSOR IS MOUNTED ON WALL 4 TO 5 FT AFF. AVOID AREAS WITH DIRECT AIRFLOW FROM SUPPLY REGISTERS.
8. USE A DROP DOWN SENSOR IF A WALL MOUNT SENSOR CANNOT BE INSTALLED DUE TO SPACE CONSTRAINTS (SEE NOTE 7 FOR REQUIREMENTS). THE SENSOR CLIPS TO THE T-BAR GRID AND ADJUSTED SO THE BOTTOM OF THE SENSOR IS 8 TO 9 FT AFF. ALLOW 2 FT OF CLEARANCE FROM METRO SHELVING AND AVOID AREAS WITH DIRECT AIRFLOW FROM SUPPLY REGISTERS.
9. FOR SURVEYOR EMS TECHNICAL SUPPORT AND SYSTEM COMMISSIONING, CONTACT SURVEYOR TECHNICAL SUPPORT, (855) 647-7660, OPTION 1 OR EMAIL INSTALLSUPPORT@VENSTER.COM. HOURS 6:00 AM TO 8:00 PM PACIFIC, MON-FRI.

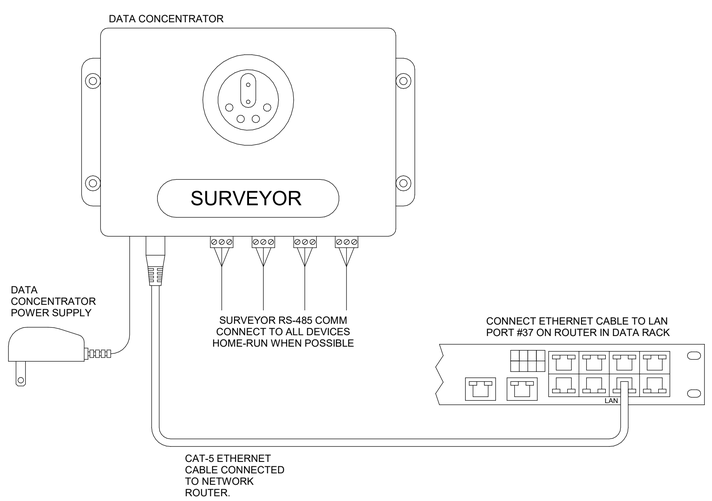

2 VENSTAR EMS - NO LIGHTING CONTROL - DATA CONCENTRATOR
N.T.S.

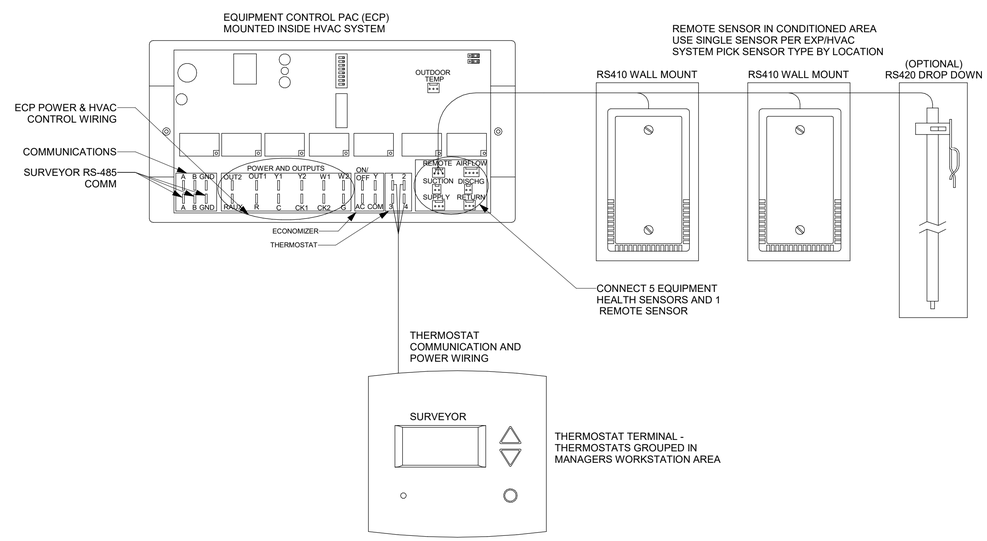

NOTES:
1. OUTDOOR TEMPERATURE SENSOR CONNECTED TO ONE ECP ONLY PER LOCATION. FACE NORTH WHEN POSSIBLE.
2. SEE GENERAL NOTES 7 AND 8 FOR REMOTE SENSOR MOUNTING LOCATION DETAILS.

3 VENSTAR EMS - NO LIGHTING CONTROL - HVAC CONTROLS
N.T.S.

FOR CONSTRUCTION

© 2019 STARBUCKS COFFEE COMPANY

STARBUCKS®
2401 UTAH AVENUE SOUTH
SEATTLE, WASHINGTON 98134
(206) 318-1575

THESE DRAWINGS AND THE PROJECT MANUAL ARE CONFIDENTIAL AND SHALL REMAIN THE SOLE PROPERTY OF STARBUCKS CORPORATION, WHICH IS THE OWNER OF THE COPYRIGHT IN THIS WORK. THEY SHALL NOT BE REPRODUCED (IN WHOLE OR IN PART), SHARED WITH THIRD PARTIES OR USED IN ANY MANNER ON OTHER PROJECTS OR EXTENSIONS TO THIS PROJECT WITHOUT THE PRIOR WRITTEN CONSENT OF STARBUCKS CORPORATION. THESE DRAWINGS AND SPECIFICATIONS ARE INTENDED TO EXPRESS DESIGN INTENT FOR A PROTOTYPICAL STARBUCKS STORE (WHICH IS SUBJECT TO CHANGE AT ANYTIME) AND DO NOT REFLECT ACTUAL SITE CONDITIONS. NEITHER PARTY SHALL HAVE ANY OBLIGATION NOR LIABILITY TO THE OTHER (EXCEPT STATED ABOVE) UNTIL A WRITTEN AGREEMENT IS FULLY EXECUTED BY BOTH PARTIES.

STARBUCKS TEMPLATE VERSION: i2021-09-13

Design Forum Architects Inc.
2056 Byers Rd
Miamisburg, OH 45342
Tel: (844) 804-7700
Donald J. Rethman
Architect In Charge
License: AR00017303

Design Forum Engineering
2056 Byers Rd
Miamisburg, OH 45342
Tel: (844) 804-7700
Timothy L. Raberding, PE
Professional Engineer
License: 62078

PROJECT NAME:
US 98 & GRIFFIN RD

PROJECT ADDRESS:
3105 US-98 NORTH
LAKELAND, FLORIDA 33801

STORE #:	80004
PROJECT #:	96892-001
ISSUE DATE:	2025-09-26
DESIGN MANAGER:	ASHLEY ASUEIRAS
PRODUCTION DESIGNER:	ANDY MCLOUD
CHECKED BY:	DONALD RETHMAN

Revision Schedule

Rev	Date	Description

SHEET TITLE:
ELECTRICAL DETAILS - EMS
SCALE:

SHEET NUMBER:
E503

10/9/2025 1:15:02 PM Autodesk Docs://US 98 and Griffin - Starbucks/TI_US 98 & Griffin Rd-MEP_R25_permit.rvt

A — EXIST - BY SHELL

ROOM	WORKROOM 3	**VOLTS**	120/208V 3P 4W	**AIC**	22000
MOUNTING	RECESSED	**BUS AMPS**	400A	**400A MLO**	
FED FROM	SERVICE DISCONNECT	**NEUTRAL**	100.00%	**LUGS**	

CKT #	CIRCUIT DESCRIPTION	CKT BKR	KVA LOAD A	B	C	A	B	C	CKT BKR	CIRCUIT DESCRIPTION	CKT #
1	RTU-1 (EXIST)	90 A/3	1.243			0.932			60 A/3	RTU-2 (EXIST)	2
3				1.243			0.932				4
5					1.243			0.932			6
7	DT WINDOW (EXIST)	20 A/1	0.2			0.36			20 A/1	* WATER FILTER	8
9	PANEL RECEPTACLE (EXIST)	20 A/1		0.18			0.18		20 A/1	BOOSTER PUMP	10
11	BACK BAR/PREP AREA	20 A/1			0.354			0.1	20 A/1	TIMECLOCK	12
13	DT DIGITAL ORDER SCREEN	20 A/1	0.24			2.45			40 A/2	* SANITIZER	14
15	DT DRIVE THRU SIGN	20 A/1		0.52			2.45				16
17	BOH & RESTROOM LIGHTING	20 A/1			0.64			0.661	20 A/1	SALES/SEATING LIGHTING	18
19	SHOW WINDOW RECEPT	20 A/1	0.18			0			20 A/1	SPARE	20
21	MONUMENT SIGN	20 A/1		1			0.36		20 A/1	DT MENU BOARD, UPLIGHT	22
23	WORDMARK SIGNAGE	20 A/1			0.96			0.62	20 A/1	DT MENU BOARD	24
25	SPARE	20 A/1	0			0			20 A/1	SPARE	26
27	HAND DRYER (NOTE 1)	20 A/1		1.9			1.9		20 A/1	HAND DRYER (NOTE 1)	28
29	DT DRIVE THRU, EXIT SIGN	20 A/1			0.52			2	20 A/1	RECIRCULATION PUMP	30
31	SPARE	20 A/1	0			0			20 A/1	SPARE	32
33	SPARE	20 A/1		0			0.36		20 A/1	RTU RECEPTACLE (EXIST)	34
35	LOGO SIGNAGE	20 A/1			1.92			3.1	45 A/2	RCU - 1 FOR ICE MACH (23181)	36
37	WATER HEATER (NOTE 1)	50 A/3	4.5			3.1					38
39				4.5			0		20 A/1	SPARE	40
41					4.5			0	20 A/1	SPARE	42
43	SC BAKERY CASE (NOTE 1)	20 A/2	1.25			0.25			20 A/1	EXT. CEILING FAN # 1 (EXIST)	44
45				1.25			0.25		20 A/1	EXT. CEILING FAN # 2 (EXIST)	46
47	EXTERIOR WALL PACKS	20 A/1			0.75			0.75	20 A/1	EF-1 (EXIST)	48
49	BLDG EXTERIOR LTG.	20 A/1	0.75			0			20 A/1	SPARE	50
51	SPARE	20 A/1		0			0		20 A/1	SPARE	52
53	SPARE	20 A/1			0			0	20 A/1	SPARE	54
55	SPARE	20 A/1	0			0			20 A/1	SPARE	56
57	SPARE	20 A/1		0			0		20 A/1	SPARE	58
59	FEED PANEL B (EXIST)	225 A/3			18.53			0	20 A/1	SPARE	60
61			17.413			0			20 A/1	SPARE	62
63				17.13			0		20 A/1	SPARE	64
65	SPARE	20 A/1			0			0	20 A/1	SPARE	66
					THIS SECTION TOTAL	32.868	34.155	37.199			
						273.898 A	286.275 A	311.645 A			

LOAD TYPE	CONN. LOAD	DEMAND	
Kitchen non-dwelling	53073 VA	34497 VA	65.00%
Lighting	9555 VA	9555 VA	100.00%
Heating	13500 VA	13500 VA	100.00%
Motor	750 VA	750 VA	100.00%
Non-continuous	3800 VA	3800 VA	100.00%
Receptacle	9200 VA	9200 VA	100.00%
HVAC	6200 VA	6200 VA	100.00%
Other	0 VA	0 VA	0.00%
Largest motor	6525 VA	8156 VA	125.00%
MOTORS	2000 VA	2000 VA	100.00%

PANEL TOTALS	
TOTAL LOAD DEMAND	87.267
TOTAL CURRENT DEMAND	242.228 A
TOTAL CONNECTED LOAD	104.21
TOTAL CONNECTED CURRENT	289.257 A

NOTES:
1. INSTALL LOCK OFF PROVISION FOR CIRCUIT BREAKERS SERVING HAND DRYERS AND BAKERY CASE PER NEC 422.31(B).
2. STAR(*) REFER TO GFCI OUTLETS.
3. (EXIST) REFER TO CIRCUITS THAT ARE EXIST BY SHELL/LL.

B — EXIST - BY SHELL

ROOM	WORKROOM 3	**VOLTS**	120/208V 3P 4W	**AIC**	22000
MOUNTING	Recessed	**BUS AMPS**	225A	**225A MCB**	
FED FROM	A	**NEUTRAL**	100.00%	**LUGS**	

CKT #	CIRCUIT DESCRIPTION	CKT BKR	KVA LOAD A	B	C	A	B	C	CKT BKR	CIRCUIT DESCRIPTION	CKT #
1	* ESPRESSO # 1	40 A/2	2.9			3			30 A/2	* LEFT TURBOCHEF	2
3				2.9			3				4
5	* ESPRESSO # 2	40 A/2			2.9			3	30 A/2	* RIGHT TURBOCHEF	6
7			2.9			3					8
9	* FUTURE EQUIPMENT,SINK	20 A/1		0			4.16		50 A/2	* DUAL BREWER	10
11	* GRINDER	20 A/1			1.4			4.16			12
13	* FUTURE EQUIPMENT	20 A/1	0.18			1.2			20 A/1	* RIGHT BLENDER	14
15	* NITRO GENERATOR, U.C. REF	20 A/1		1.573			0.6		20 A/1	* ICE MACHINE (23181)	16
17	* LEFT BLENDER	20 A/1			1.2			0.66	20 A/1	* SINGLE DOOR FREEZER	18
19	* SINGLE DOOR REFRIGERATOR	20 A/1	0.3			1.15			20 A/1	* DOUBLE DOOR FREEZER	20
21	* DOUBLE DOOR REFRIGERATOR	20 A/1		0.67			0.96		20 A/1	* U.C. REFRIGERATOR	22
23	SPARE	20 A/1			0			0.67	20 A/1	* DOUBLE DOOR REFRIGERATOR	24
25	SPARE	20 A/1	0			0.24			20 A/1	* U.C. REFRIGERATOR, FUTURE	26
27	* DOUBLE DOOR FREEZER	20 A/1		1.15			0.24		20 A/1	* U.C. REFRIGERATOR, INSTA-HOT	28
29	SPARE	20 A/1			0			0.24	20 A/1	* U.C. REFRIGERATOR, INSTA-HOT	30
31	SPARE	20 A/1	0			1.5			20 A/1	* INSTA-HOT, PREP TABLE	32
33	* DT COMMUNICATIONS	20 A/1		0.36			0.54		20 A/1	* PATIO RECEPT	34
35	* DT POS - DED. REC, FUTURE	20 A/1			0.54			0.92	20 A/1	* CONVENIENCE RECEPT	36
37	* DT TIMER, FUTURE	20 A/1	0.36			0.72			20 A/1	* DIGITAL MENU BOARD (FUTURE)	38
39	SPARE	20 A/1		0			0.54		20 A/1	* MANAGER'S DESK - MUSIC, GP	40
41	SPARE	20 A/1			0			0.54	20 A/1	* MANAGER'S DESK - PC,PRINTER	42
43	SPARE	20 A/1	0			0.18			20 A/1	* RACKS UPS	44
45	SPARE	20 A/1		0			0.18		20 A/1	* PDU STRIP	46
47	SPARE	20 A/1			0			0.36	20 A/1	* EMS DATA CONCENTRATOR	48
49	SPARE	20 A/1	0			0.18			20 A/1	* SECURITY ALARM PANEL	50
51	SPARE	20 A/1		0			0.54		20 A/1	*POS DED. RECEPT	52
53	SPARE	20 A/1			0			0.54	20 A/1	* POS REC - MISC EQUIP	54
55	SPARE	20 A/1	0			0.72			20 A/1	CUP LABELER, MOP	56
57	SPARE	20 A/1		0			0		20 A/1	SPARE	58
59	SPARE	20 A/1			0			0	20 A/1	SPARE	60
61	SPARE	20 A/1	0			0			20 A/1	SPARE	62
63	SPARE	20 A/1		0			0		20 A/1	SPARE	64
65	SPARE	20 A/1			0			0	20 A/1	SPARE	66
					THIS SECTION TOTAL	18.53	17.413	17.13			
						154.779 A	145.47 A	142.75 A			

LOAD TYPE	CONN. LOAD	DEMAND	
Kitchen non-dwelling	45673 VA	29687 VA	65.00%
Receptacle	7400 VA	7400 VA	100.00%
Other	0 VA	0 VA	0.00%

PANEL TOTALS	
TOTAL LOAD DEMAND	37.087
TOTAL CURRENT DEMAND	102.944 A
TOTAL CONNECTED LOAD	53.073
TOTAL CONNECTED CURRENT	147.316 A

NOTES:
1. INSTALL LOCK OFF PROVISION FOR CIRCUIT BREAKERS SERVING HAND DRYERS AND BAKERY CASE PER NEC 422.31(B).
2. STAR(*) REFER TO GFCI OUTLETS.
3. (EXIST) REFER TO CIRCUITS THAT ARE EXIST BY SHELL/LL.

2

CLOSE OUT NOTES

A. WITHIN 30 DAYS OF DATE OF SYSTEM ACCEPTANCE, RECORD DRAWINGS OF THE ACTUAL INSTALLATION SHALL BE PROVIDED TO THE BUILDING OWNER. RECORD DRAWINGS SHALL INCLUDE, AT A MINIMUM, THE FOLLOWING:

a. A SINGLE-LINE DIAGRAM OF THE BUILDING ELECTRICAL DISTRIBUTION SYSTEM.

b. FLOOR PLANS INDICATING LOCATION AND AREA SERVED FOR ALL DISTRIBUTION.

B. UPON COMPLETION OF PROJECT, PROVIDE OPERATION AND MAINTENANCE MANUALS TO OWNER. THE MANUALS SHALL CONTAIN, AT A MINIMUM, THE FOLLOWING INFORMATION:

a. SUBMITTAL DATA STATING EQUIPMENT RATING AND SELECTED OPTIONS FOR EACH PIECE OF EQUIPMENT REQUIRING MAINTENANCE.

b. OPERATION MANUALS AND MAINTENANCE MANUALS FOR EACH PIECE OF EQUIPMENT REQUIRING MAINTENANCE. ROUTINE MAINTENANCE ACTIONS SHALL BE CLEARLY IDENTIFIED.

c. NAMES AND ADDRESSES OF AT LEAST ONE QUALIFIED SERVICE AGENCY.

C. PRIOR TO PASSING FINAL INSPECTION, THE CONTRACTOR SHALL PROVIDE EVIDENCE THAT THE LIGHTING CONTROL SYSTEMS HAVE BEEN TESTED TO ENSURE THAT CONTROL HARDWARE AND SOFTWARE ARE CALIBRATED, ADJUSTED, PROGRAMMED AND IN PROPER WORKING CONDITION IN ACCORDANCE TO THE CONSTRUCTION DOCUMENTS AND MANUFACTURER'S INSTRUCTIONS.

2

GROUND FAULT PROTECTION NOTES

A. PROVIDE GFCI PROTECTION AS REQUIRED BY NEC 210.8.

B. CIRCUITS REQUIRING GFCI PROTECTION IDENTIFIED WITH * ON PANEL SCHEDULES.

C. ABOVE-COUNTER RECEPTACLES THAT ARE READILY ACCESSIBLE AND WITHIN REACH OF PARTNERS SHALL BE GFCI TYPE.

D. BELOW-COUNTER RECEPTACLES, OR RECEPTACLES THAT ARE DIFFICULT TO REACH OR REQUIRE MOVING EQUIPMENT TO RESET, AND ARE NOT READILY ACCESSIBLE SHALL BE PROTECTED BY GFI CIRCUIT BREAKERS.

E. WHERE THE AVAILABLE SHORT CIRCUIT CURRENT EXCEEDS 22,000 AMPS AT THE PANELBOARD, CONTACT CIRCUIT BREAKER MANUFACTURER AND PROVIDE GFCI TYPE CIRCUIT BREAKER THAT SERIES RATES WITH PANEL OVER CURRENT PROTECTION IF AVAILABLE.

F. WHERE THE AVAILABLE SHORT CIRCUIT CURRENT EXCEEDS 22,000 AMPS AT THE PANELBOARD, AND GFCI BREAKERS ARE NOT AVAILABLE, PROVIDE DEAD-FRONT GFCIS (IN A READILY ACCESSIBLE LOCATION) TO SERVE RECEPTACLES THAT ARE NOT READILY ACCESSIBLE.

LIGHTING CONTROL NOTES:
1. FURNISH AND INSTALL NEW TIME SWITCH "T1" - INTERMATIC ET8415CR.
2. FURNISH AND INSTALL NEW CONTACTORS (SQUARE D 8903L OR EQUAL) FOR LIGHTING CONTROL AS REQUIRED.
3. FURNISH AND INSTALL NEW PHOTOCELL(S) (INTERMATIC EK4736S OR EQUAL) FOR CONTROL OF EXTERIOR LIGHTS AND BUILDING MOUNTED SIGNAGE.
4. COORDINATE TIME SWITCH SETTINGS AND OPERATION WITH STORE MANAGER PRIOR TO CLOSEOUT.
5. FOR PHOTOCELL CONTROLLED CONTACTORS FUNCTION SHALL BE PHOTOCELL ON TIMED OFF.
6. OT-2 HOUR TIMED OVERRIDE SWITCH FOR SALES FLOOR. TORK MODEL A502HW.
7. DIGITAL ORDER SCREEN IS NEVER CONTROLLED THRU THIS TIME SWITCH.

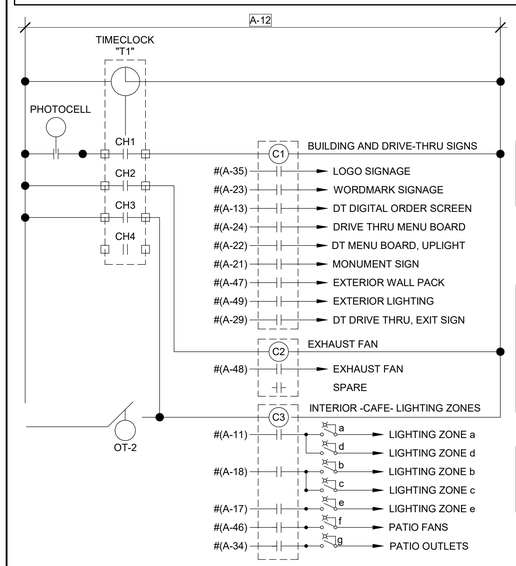

CONTROL NOTES:
1. ON AT STORE OPEN, OFF AT DAWN.
2. ON AT DUSK, OFF AT STORE CLOSE.

EXHAUST FAN CONTROL NOTES:
WHEN THE STORE IS OPEN, THE EXHAUST FAN MOTOR DAMPER SHALL OPEN AND FAN SHALL RUN. WHEN THE STORE IS CLOSED, THE EXHAUST FAN MOTOR DAMPER SHALL BE CLOSED AND FAN SHALL BE OFF.

CONTROL NOTES:
1. ON 1 HOUR BEFORE STORE OPEN.
2. OFF 1 HOUR AFTER STORE CLOSE.

LIGHTING CONTROL DIAGRAM

MINIMUM WIRE & CONDUIT SIZES FOR CIRCUIT BREAKERS AND FUSES			
AMPS	FEEDER SIZE	GROUND	CONDUIT
15	#12	#12	3/4"
20	#12	#12	3/4"
25	#10	#10	3/4"
30	#10	#10	3/4"
35	#8	#10	3/4"
40	#8	#10	3/4"
45	#8	#10	3/4"
50	#8	#10	3/4"
60	#6	#10	3/4"
70	#4	#8	1"
80	#4	#8	1"
90	#3	#8	1-1/4"
100	#3	#8	1-1/4"

NOTES:

A. ALL CONDUCTORS SHALL BE COPPER.

B. ALL CONDUIT SHALL HAVE EQUIPMENT GROUNDING CONDUCTOR INSTALLED.

C. CONDUIT BELOW GRADE OUTSIDE OF BUILDING SHALL BE 1" MINIMUM.

D. SIZING OF CONDUCTORS SHALL BE ALTERED FOR DERATING PER N.E.C. OR VOLTAGE DROP CONSIDERATIONS.

E. SEE RISER DIAGRAM FOR SIZING OF CIRCUITS GREATER THAN 100A.

F. USE #10 AWG, COPPER CONDUCTORS FOR 20 AMPERE, 120 VOLT BRANCH CIRCUITS LONGER THAN 75 FEED. USE #10 AWG, COPPER CONDUCTORS FOR 20 AMPERE, 277 VOLT BRANCH CIRCUITS LONGER THAN 200 FEET. WHERE WIRE SIZE IS INCREASED IN SIZE FOR VOLTAGE DROP, EQUIPMENT GROUND SHALL BE INCREASED PROPORTIONATELY PER NEC 250.122(B).

G. WHERE MC CABLE IS ALLOWED BY AUTHORITY HAVING JURISDICTION THE CONDUCTORS FOR MC CABLE SHALL BE THHN. JACKET SHALL BE THE MANUFACTURER'S STANDARD SIZE FOR CONDUCTORS UTILIZED.

PROVIDE THE FOLLOWING QUANTITIES:

A. 1 POLE CIRCUIT - 1 HOT, 1 NEUTRAL, 1 GROUND

B. 2 POLE CIRCUIT - 2 HOT, 1 GROUND

C. 3 POLE CIRCUIT - 3 HOT, 1 GROUND

D. 1 POLE IG CIRCUIT - 1 HOT, 1 NEUTRAL, 1 GROUND, 1 ISOLATED GROUND.

2

FEEDER SCHEDULE	
SYMBOL	DESCRIPTION
Ⓐ	TWO(2) CONDUITS EACH CONTAINING THE FOLLOWING: 4-#350 MCM AL. 1-#2/0 Grnd. AL. } 3" PVC40/EMT
Ⓑ	4-#300 MCM AL. 1-#2 Grnd. AL. } 3" PVC40/EMT
Ⓒ	TWO(2) CONDUITS EACH CONTAINING THE FOLLOWING: 4-#250 MCM AL. 4" PVC40/EMT

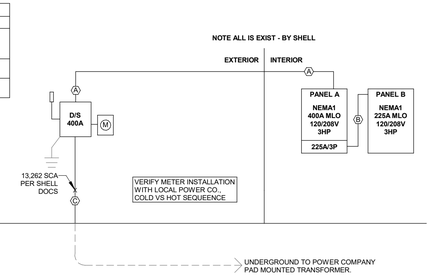

RISER DIAGRAM

FOR CONSTRUCTION

© 2019 STARBUCKS COFFEE COMPANY

STARBUCKS®
2401 UTAH AVENUE SOUTH
SEATTLE, WASHINGTON 98134
(206) 318-1575

THESE DRAWINGS AND THE PROJECT MANUAL ARE CONFIDENTIAL AND SHALL REMAIN THE SOLE PROPERTY OF STARBUCKS CORPORATION, WHICH IS THE OWNER OF THE COPYRIGHT IN THIS WORK. THEY SHALL NOT BE REPRODUCED (IN WHOLE OR IN PART), SHARED WITH THIRD PARTIES OR USED IN ANY MANNER ON OTHER PROJECTS OR EXTENSIONS TO THIS PROJECT WITHOUT THE PRIOR WRITTEN CONSENT OF STARBUCKS CORPORATION. THESE DRAWINGS AND SPECIFICATIONS ARE INTENDED TO EXPRESS DESIGN INTENT FOR A PROTOTYPICAL STARBUCKS STORE (WHICH IS SUBJECT TO CHANGE AT ANYTIME) AND DO NOT REFLECT ACTUAL SITE CONDITIONS. NEITHER PARTY SHALL HAVE ANY OBLIGATION NOR LIABILITY TO THE OTHER (EXCEPT STATED ABOVE) UNTIL A WRITTEN AGREEMENT IS FULLY EXECUTED BY BOTH PARTIES.

STARBUCKS TEMPLATE VERSION: i2021-09-13

Design Forum Architects Inc.
2056 Byers Rd
Miamisburg, OH 45342
Tel: (844) 804-7700
Donald J. Rethman
Architect In Charge
License: AR00017303

Design Forum Engineering
2056 Byers Rd
Miamisburg, OH 45342
Tel: (844) 804-7700
Timothy L. Raberding, PE
Professional Engineer
License: 62078

PROJECT NAME:
US 98 & GRIFFIN RD

PROJECT ADDRESS:
3105 US-98 NORTH
LAKELAND, FLORIDA 33801

STORE #:	80004
PROJECT #:	96892-001
ISSUE DATE:	2025-09-26
DESIGN MANAGER:	ASHLEY ASUEIRAS
PRODUCTION DESIGNER:	ANDY MCLOUD
CHECKED BY:	DONALD RETHMAN

Revision Schedule

Rev	Date	Description
2	10/3/25	Revision 2

SHEET TITLE:
PANELBOARD SCHEDULES
SCALE:

SHEET NUMBER:
E601

10/9/2025 1:15:03 PM Autodesk Docs://US 98 and Griffin - Starbucks/TI_US 98 & Griffin Rd-MEP_R25_permit.rvt

Section # & Req.ID	Rough-In Electrical Inspection	Complies?	Comments/Assumptions
8.4.2 [EL10][2]	At least 50% of all 125 volt 15- and 20-Amp receptacles are controlled by an automatic control device.	☐Complies ☐Does Not ☐Not Observable ☐Not Applicable	**Exception:** Space type is not private office, open office, or computer classroom.
8.4.3 [EL11][2]	New buildings have electrical energy use measurement devices installed. Where tenant spaces exist, each tenant is monitored separately. In buildings with a digital control system the energy use is transmitted to to control system and displayed graphically.	☐Complies ☐Does Not ☐Not Observable ☐Not Applicable	**Exception:** Individual tenant spaces less than 10,000 ft2.
9.4.1.1 [EL1][2]	Automatic control requirements prescribed in Table 9.6.1, for the appropriate space type, are installed. Mandatory lighting controls (labeled as 'REQ') and optional choice controls (labeled as 'ADD1' and 'ADD2') are implemented.	☐Complies ☐Does Not ☐Not Observable ☐Not Applicable	Requirement will be met. **Location on plans/spec:** E Series Sheets
9.4.1.1 [EL2][2]	Independent lighting controls installed per approved lighting plans and all manual controls readily accessible and visible to occupants.	☐Complies ☐Does Not ☐Not Observable ☐Not Applicable	Requirement will be met.
9.4.1.1f [EL13][1]	Daylight areas under skylights and roof monitors that have more than 150 W combined input power for general lighting are controlled by photocontrols.	☐Complies ☐Does Not ☐Not Observable ☐Not Applicable	**Exception:** Requirement does not apply.
9.4.1.3 [EL4][1]	Separate lighting control devices for specific uses installed per approved lighting plans.	☐Complies ☐Does Not ☐Not Observable ☐Not Applicable	Requirement will be met. **Location on plans/spec:** E Series Sheets
9.6.2 [EL8][1]	Additional interior lighting power allowed for special functions per the approved lighting plans and is automatically controlled and separated from general lighting.	☐Complies ☐Does Not ☐Not Observable ☐Not Applicable	Requirement will be met. **Location on plans/spec:** E Series Sheets

Additional Comments/Assumptions:

1 High Impact (Tier 1) | 2 Medium Impact (Tier 2) | 3 Low Impact (Tier 3)

2

COMcheck Software Version COMcheckWeb
Interior Lighting Compliance Certificate

Project Information

Energy Code: 90.1 (2019) Standard
Project Title: SBX - US 98 and Griffin, FL
Project Type: Alteration

Construction Site:

Owner/Agent:
Starbucks
2401 Utah Avenue South
Seattle, Washington 98134
206-318-1575

Designer/Contractor:
Tim Raberding
Design Forum Engineering
2056 Byers Road
Dayton, Ohio 45342
844-804-7700

Allowed Interior Lighting Power

A Area Category	B Floor Area (ft2)	C Allowed Watts / ft2	D Allowed Watts
1-Common Space Types:Dining Area - Bar Lounge/Leisure	2500	0.86	2150
		Total Allowed Watts =	2150

Proposed Interior Lighting Power

A Fixture ID : Description / Lamp / Wattage Per Lamp / Ballast	B Lamps/ Fixture	C # of Fixture	D Fixture Watt.	E (C X D)
Common Space Types: Dining Area - Bar Lounge/Leisure (2500 sq.ft.)				
LED 1: 14893: Sconce: Other:	1	1	5	5
LED 2: 20660-20663: Pendant: Other:	2	4	11	44
LED 3: 20778: Sconce: Other:	1	1	9	9
LED 4: 21771: Recessed Can: Other:	1	43	12	516
LED 5: 21774: Recessed Can: Other:	1	6	12	72
LED 6: 22215: LED Tape-4W/ft: Other:	1	77	4	308
LED 7: 23055: Troffer: Other:	1	5	29	145
LED 8: 24114: Pendant: Other:	1	3	5	15
CLD 1: 21779: Track Lighting: Wattage based on current limiting device capacity	0	0	840	840
CLD: 21777: Track Lighting: Wattage based on current limiting device capacity	0	0	120	120
			Total Proposed Watts =	2074

Interior Lighting PASSES

Interior Lighting Compliance Statement

Compliance Statement: The proposed interior lighting alteration project represented in this document is consistent with the building plans, specifications, and other calculations submitted with this permit application. The proposed interior lighting systems have been designed to meet the 90.1 (2019) Standard requirements in COMcheck Version COMcheckWeb and to comply with any applicable mandatory requirements listed in the Inspection Checklist.

Kyle Roche — Name - Title
Kyle Roche — Signature
10/3/2025 — Date

Section # & Req.ID	Final Inspection	Complies?	Comments/Assumptions
8.7.1 [FI16][1]	Furnished as-built drawings for electric power systems within 30 days of system acceptance.	☐Complies ☐Does Not ☐Not Observable ☐Not Applicable	Requirement will be met.
8.7.2 [FI17][1]	Furnished O&M instructions for systems and equipment to the building owner or designated representative.	☐Complies ☐Does Not ☐Not Observable ☐Not Applicable	Requirement will be met.
9.2.2.3 [FI18][1]	Interior installed lamp and fixture lighting power is consistent with what is shown on the approved lighting plans, demonstrating proposed watts are less than or equal to allowed watts.	☐Complies ☐Does Not ☐Not Observable ☐Not Applicable	*See the Interior Lighting fixture schedule for values.*
9.4.4 [FI20][1]	At least 75% of all permanently installed lighting fixtures in dwelling units have >= 55 lm/W efficacy or a >= 45 lm/W total luminaire efficacy.	☐Complies ☐Does Not ☐Not Observable ☐Not Applicable	**Exception:** Requirement does not apply.

Additional Comments/Assumptions:

1 High Impact (Tier 1) | 2 Medium Impact (Tier 2) | 3 Low Impact (Tier 3)

COMcheck Software Version COMcheckWeb
Inspection Checklist

Energy Code: 90.1 (2019) Standard

Requirements: 100.0% were addressed directly in the COMcheck software

Text in the "Comments/Assumptions" column is provided by the user in the COMcheck Requirements screen. For each requirement, the user certifies that a code requirement will be met and how that is documented, or that an exception is being claimed. Where compliance is itemized in a separate table, a reference to that table is provided.

Section # & Req.ID	Plan Review	Complies?	Comments/Assumptions
4.2.2, 8.4.1.1, 8.4.1.2, 8.7 [PR6][2]	Plans, specifications, and/or calculations provide all information with which compliance can be determined for the electrical systems and equipment and document where exceptions are claimed. Feeder connectors sized in accordance with approved plans and branch circuits sized for maximum drop of 3%.	☐Complies ☐Does Not ☐Not Observable ☐Not Applicable	Requirement will be met.
4.2.2, 9.4.3, 9.7 [PR4][1]	Plans, specifications, and/or calculations provide all information with which compliance can be determined for the interior lighting and electrical systems and equipment and document where exceptions to the standard are claimed. Information provided should include interior lighting power calculations, wattage of bulbs and ballasts, transformers and control devices.	☐Complies ☐Does Not ☐Not Observable ☐Not Applicable	Requirement will be met. **Location on plans/spec:** E Series Sheets

Additional Comments/Assumptions:

1 High Impact (Tier 1) | 2 Medium Impact (Tier 2) | 3 Low Impact (Tier 3)

FOR CONSTRUCTION

© 2019 STARBUCKS COFFEE COMPANY

STARBUCKS®
2401 UTAH AVENUE SOUTH
SEATTLE, WASHINGTON 98134
(206) 318-1575

THESE DRAWINGS AND THE PROJECT MANUAL ARE CONFIDENTIAL AND SHALL REMAIN THE SOLE PROPERTY OF STARBUCKS CORPORATION, WHICH IS THE OWNER OF THE COPYRIGHT IN THIS WORK. THEY SHALL NOT BE REPRODUCED (IN WHOLE OR IN PART), SHARED WITH THIRD PARTIES OR USED IN ANY MANNER ON OTHER PROJECTS OR EXTENSIONS TO THIS PROJECT WITHOUT THE PRIOR WRITTEN CONSENT OF STARBUCKS CORPORATION. THESE DRAWINGS AND SPECIFICATIONS ARE INTENDED TO EXPRESS DESIGN INTENT FOR A PROTOTYPICAL STARBUCKS STORE (WHICH IS SUBJECT TO CHANGE AT ANYTIME) AND DO NOT REFLECT ACTUAL SITE CONDITIONS. NEITHER PARTY SHALL HAVE ANY OBLIGATION NOR LIABILITY TO THE OTHER (EXCEPT STATED ABOVE) UNTIL A WRITTEN AGREEMENT IS FULLY EXECUTED BY BOTH PARTIES.

STARBUCKS TEMPLATE VERSION: i2021-09-13

Design Forum Architects Inc.
2056 Byers Rd
Miamisburg, OH 45342
Tel: (844) 804-7700
Donald J. Rethman
Architect In Charge
License: AR00017303

Design Forum Engineering
2056 Byers Rd
Miamisburg, OH 45342
Tel: (844) 804-7700
Timothy L. Raberding, PE
Professional Engineer
License: 62078

PROJECT NAME:
US 98 & GRIFFIN RD

PROJECT ADDRESS:
3105 US-98 NORTH
LAKELAND, FLORIDA 33801

STORE #: 80004
PROJECT #: 96892-001
ISSUE DATE: 2025-09-26
DESIGN MANAGER: ASHLEY ASUEIRAS
PRODUCTION DESIGNER: ANDY MCLOUD
CHECKED BY: DONALD RETHMAN

Revision Schedule

Rev	Date	Description
2	10/3/25	Revision 2

SHEET TITLE:
ENERGY CALCULATIONS

SCALE:

SHEET NUMBER:
EN001

10/9/2025 1:15:05 PM Autodesk Docs://US 98 and Griffin - Starbucks/TI_US 98 & Griffin Rd-MEP_R25_permit.rvt